TP, TPD

Installation and operating instructions

be
think
innovate

GRUNDFOS

English (GB) Installation and operating instructions

Original installation and operating instructions

CONTENTS

Warning

Prior to installation, read these installation and operating instructions. Installation and operation must comply with local regulations and accepted codes of good practice.

1. Symbols used in this document

Warning

If these safety instructions are not observed, it may result in personal injury.

Caution

If these safety instructions are not observed, it may result in malfunction or damage to the equipment.

Note

Notes or instructions that make the job easier and ensure safe operation.

2. General information

These instructions apply to the pump types TP and TPD fitted with Grundfos motors. If the pump is fitted with another motor make, please note that the motor data may differ from the data stated in these instructions.

3. Delivery and handling

3.1 Delivery

The pump is delivered from the factory in a carton with a wooden bottom, which is specially designed for transport by fork-lift truck or a similar vehicle.

3.2 Handling

Warning

The lifting eyes fitted to large pump motors can be used for lifting the pump head (motor, motor stool and impeller). The lifting eyes must not be used for lifting the entire pump.

TPD:

The centrally positioned thread of the pump housing must not be used for lifting purposes as the thread is placed below the centre of gravity of the pump.

Pumps without lifting eyes must be lifted by means of nylon straps. See figures 1 and 2.

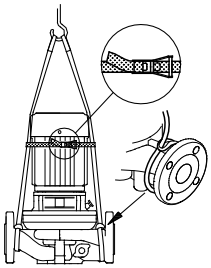

TM02 7007 2303

Fig. 1 TP

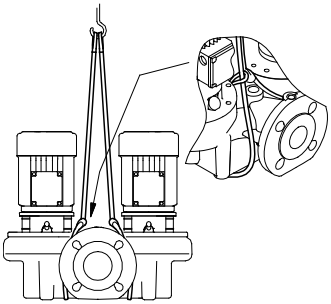

TM02 7008 2303

Fig. 2 TPD

Pumps with lifting eyes must be lifted by means of nylon straps and shackles. See figures 3 and 4.

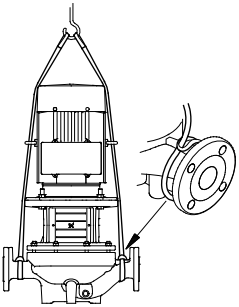

TM02 7009 2303

Fig. 3 TP

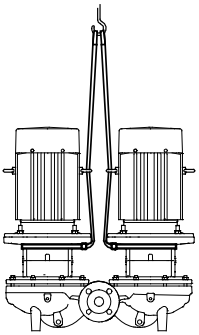

TM02 7010 2303

Fig. 4 TPD

4. Applications

The pumps are designed to circulate hot or cold water in residential, institutional and industrial applications in systems, such as:

- heating systems
- district heating plants
- central heating systems for blocks of flats
- air-conditioning systems
- cooling systems.

In addition, the pump range is used for liquid transfer and water supply in systems such as:

- washing systems
- domestic hot water systems
- industrial systems in general.

To ensure optimum operation, the dimensioning range of the system must fall within the performance range of the pump.

4.1 Pumped liquids

Thin, clean, non-aggressive and non-explosive liquids, not containing solid particles or fibres that may attack the pump mechanically or chemically.

Examples:

- Central heating system water (the water must meet the requirements of accepted standards on water quality in heating systems)
- cooling liquids
- domestic hot water
- industrial liquids
- softened water.

The pumping of liquids with a density and/or kinematic viscosity higher than that of water will have the following effects:

- a considerable pressure drop
- a drop in hydraulic performance
- a rise in power consumption.

In such cases, the pump must be fitted with a bigger motor. If in doubt, contact Grundfos.

The EPDM O-rings fitted as standard are primarily suitable for water.

If the water contains mineral/synthetic oils or chemicals or if other liquids than water are pumped, the O-rings must be chosen accordingly.

5. Installation

Warning

When pumping hot or cold liquids, make sure that persons cannot accidentally come into contact with hot or cold surfaces.

The pump must be sited in a dry, well ventilated, but frost-free position.

When installing pumps with oval bolt holes in the pump flange (PN 6/10), use washers as shown in fig. 5.

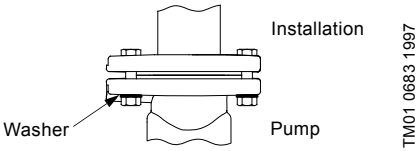

Fig. 5 Use of washers for oval bolt holes

Arrows on the pump housing show the direction of flow of liquid through the pump.

Pumps with motors smaller than 11 kW can be installed in horizontal or vertical pipework.

Pumps with motors of 11 kW and up may only be installed in horizontal pipework with the motor in vertical position.

However, some TP, TPE pumps of 11 kW and up may be suspended directly in the pipes (horizontally or vertically). See the table *TP, TPE pumps from 11 kW and up suspended in the pipes* on page 29.

In installations where the pump is suspended directly in the pipes, the pump can support the pipe length L on both sides of the pump (L less than 3 x DN). See fig. 6. In installations where the pump is suspended directly in the pipes, the pump must be lifted and held in correct position by means of ropes or similar until both pump flanges are completely fastened to the pipe flanges.

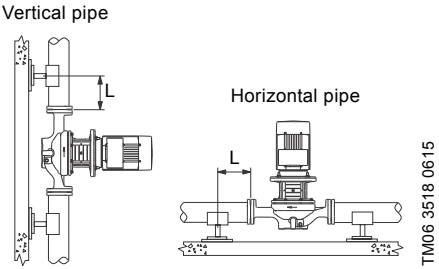

Fig. 6 Pump suspended directly in the pipes

Caution The motor must never fall below the horizontal plane.

For inspection and motor/pump head removal, the following clearance is required above the motor:

- 300 mm for motors up to and including 4.0 kW.
- 1 m for motors of 5.5 kW and up.

See fig. 7.

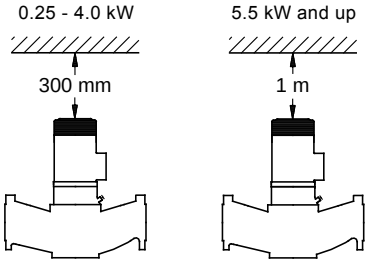

Fig. 7 Required clearance above the motor

Twin-head pumps installed in horizontal pipes must be fitted with an automatic air vent in the upper part of the pump housing. See fig. 8. The automatic air vent is not supplied with the pump.

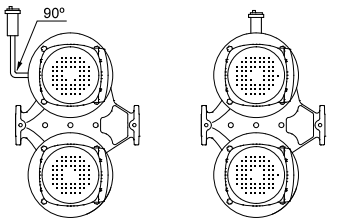

Fig. 8 Automatic air vent

If the liquid temperature falls below the ambient temperature, condensation may form in the motor during inactivity. In this case, make sure that the drain hole in the motor flange is open and points downwards. See fig. 9.

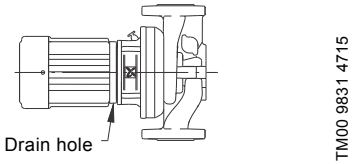

Fig. 9 Drain hole in motor flange

If twin-head pumps are used for pumping liquids with a temperature below 0 °C / 32 °F, condensed water may freeze and cause the coupling to get stuck. The problem can be remedied by installing heating elements. Whenever possible (pumps with motors smaller than 11 kW), the pump must be installed with the motor shaft in horizontal position. See fig. 8.

Caution The technical data in section *9. Technical data* must be observed.

5.1 Pipework

Fit isolating valves on either side of the pump to avoid draining the system if the pump needs to be cleaned or repaired.

The pump is suitable for pipeli
that the pipework is adequately supported either side of the pump. TP 25-50, 25-80, 25-90, 32-50, 32-80, 32-90, 40-50, 40-80 and 40-90 are designed for pipeline mounting only.

When installing the pipes, make sure that the pump housing is not stressed by the pipework.

The inlet and outlet pipes must be of an adequate size, taking the pump inlet pressure into account.

To avoid sediment build-up, do not fit the pump at the lowest point of the system.

Install the pipes so that air locks are avoided, especially on the inlet side of the pump. See fig. 10.

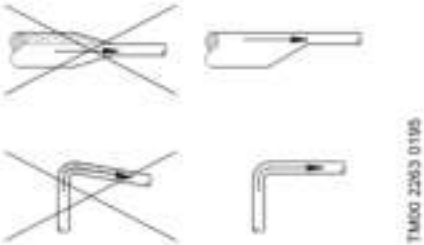

Fig. 10 Correct pipework on the inlet side of the pump

Caution

The pump is not allowed to run against a closed outlet valve as this will cause an increase in temperature/formation of steam in the pump which may cause damage to the pump.

If there is any danger of the pump running against a closed outlet valve, ensure a minimum liquid flow through the pump by connecting a bypass/a drain to the outlet pipe. The drain can for instance be connected to a tank. A minimum flow rate equal to 10 % of the flow rate at maximum efficiency is needed at all times.

Flow rate and heac , are stated on the pump nameplate.

5.2 Elimination of noise and vibrations

In order to achieve optimum operation and minimum noise and vibration, consider vibration damping of the pump. Generally, always consider this for pumps with motors of 11 kW and up, but for motors of 90 kW and up as well as the pumps stated in the table below, vibration damping is mandatory:

Pump type	P2 [kW]	Frequency [Hz]
TP 200-280/4	[illegible]	[illegible]
TP 200-290/4	[illegible]	[illegible]
TP 200-320/4	[illegible]	[illegible]
TP 200-360/4	[illegible]	[illegible]
TP 200-390/4	[illegible]	[illegible]

Smaller , may also cause undesirable noise and vibration.

Noise and vibration are generated by the revolutions of the motor and pump and by the flow in pipes and fittings. The effect on the environment is subjective and depends on correct installation and the state of the remaining system.

Elimination of noise and vibrations is best achieved by means of a concrete foundation, vibration dampers and expansion joints.

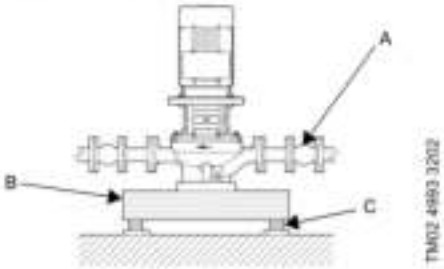

Fig. 11 Foundation for TP pump

Pos.	Description
A	Expansion joint
B	Concrete pedestal
C	Vibration damper

At high liquid velocities (greater than 5 m/s), we recommend that you to fit larger expansion joints matching the pipes.

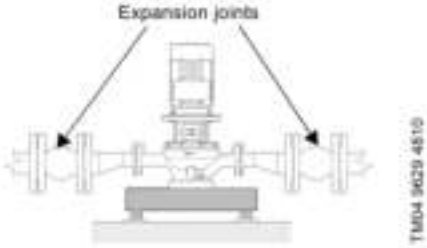

Fig. 12 TP pump installed with larger expansion joints

5.3 Foundation

We recommend that you install the pump on a concrete foundation which is heavy enough to provide permanent and rigid support to the entire pump. The foundation must be capable of absorbing any vibration, normal strain or shock. As a rule of thumb, the weight of the concrete foundation must be 1.5 times the weight of the pump. Place the pump on the foundation and fasten it. See fig. 11.

5.3.1 Recommend ons for TP, TPD Series 300 pumps

For TP Series 300 pumps with weights of 150 kg or more, we recommend that you mount the pump on a concrete foundation with the dimensions stated in the table below. The same recommendation applies for TPD Series 300 pumps with weights of 300 kg or more.

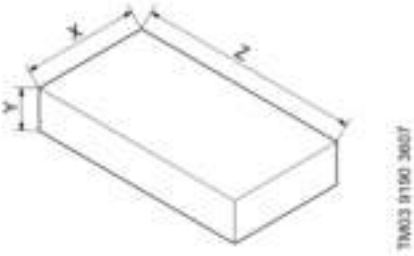

Fig. 13 Foundation for TP, TPD Series 300 pumps

Concrete foundation dimensions

Pump weight [kg]		Y (height) [mm]	Z (length) [mm]	X (width) [mm]
150		280	565	565
200		310	620	620
250		330	670	670
300		360	710	710
350		375	750	750
400		390	780	780
450		410	810	810
500		420	840	840
550		440	870	870
600		450	900	900
650		460	920	920
700		470	940	940
750		480	970	970
800		490	990	990
850		500	1010	1010
900		510	1030	1030
950	≤ DN 200	520	1050	1050
1000		530	1060	1060
1050		540	1080	1080
1100		550	1100	1100
1150		560	1100	1100
1200		560	1130	1130
1250		570	1150	1150
1300		580	1160	1160
1350		590	1180	1180
1400		600	1190	1190
1450		600	1200	1200
1500		610	1220	1220
1550		620	1230	1230
1600		620	1250	1250
1650		630	1250	1250
1700		635	1270	1270

Concrete foundation dimensions

Pump weight [kg]		Y (height) [mm]	Z (length) [mm]	X (width) [mm]
800		450	1400	800
1000		450	1400	1000
1200		450	1400	1200
1400		500	1600	1200
1600		500	1600	1350
1800		500	1600	1500
2000		550	1600	1600
2200	DN 300 / DN 350 / DN 400	550	1700	1700
2400		550	1800	1800
2600		600	1800	1800
3000		600	2000	2000
3400		680	2000	2000
3800		760	2000	2000
4200		840	2000	2000
4600		920	2000	2000
5000		1000	2000	2000
5400		1080	2000	2000

5.4 Terminal box positions

Warning

Before starting work on the pump, make sure that the power supply has been switched off and that it cannot be accidentally switched on.

The terminal box can be turned to any of four positions, in 90 ° steps.

Change the terminal box position as follows:

1. If necessary, remove the coupling guards using a screwdriver. Do not remove the coupling.
2. Remove the screws securing the motor to the pump.
3. Turn the motor to the required position.
4. Replace and tighten the screws.
5. Replace the coupling guards.

5.5 Base plate

Single-head pumps (except TP 25-50, 25-80, 25-90, 32-50, 32-80, 32-90, 40-50, 40-80 and 40-90) have two tapped holes in the bottom of the pump housing which can be used for fitting a Grundfos base plate to the pump. The base plate is available as an optional extra.

Twin-head pumps have four tapped holes in the bottom of the pump housing. For some twin-head pumps, a base plate consisting of two halves is available.

Base plate shown on page 32.

5.6 Insulation

Caution

Do not insulate the motor stool as this will trap any vapour escaping from the shaft seal, thus causing corrosion. Covering the motor stool with insulation will also make inspection and service difficult.

Follow the guidelines in the pump.

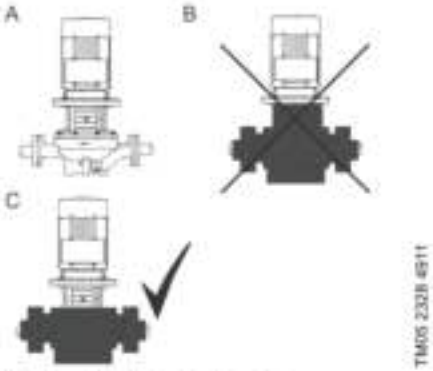

Fig. 14 Insulation of TP pumps

Pos.	Description
A	Without insulation
B	Incorrect insulation
C	Correct insulation

5.7 Frost protection

Pumps which are not being used during periods of frost must be drained to avoid damage.

6. Electrical connection

Mi ɔction in accordance with local regulations.

Warning

Before removing the terminal box cover and before any removal/dismantling of the pump, make sure that the power supply has been switched off.

Connect the pump to an external mains switch with a minimum contact gap of 3 mm in all poles.

The operating voltag arked on the pump nameplate. Make sure that the motor is suitable for the power supply on which it will be used.

Single-phase standard motors incorporate a thermal switch and require no additional motor protection.

Three-phase motors must be connected to a motor protection device.

Motors of 3 kW and up incorporate thermistors (PTC). The thermistors are designed according to DIN 44082.

Mi ɔction as shown in the diagram inside the terminal box cover.

The motors of twin-head pumps i separately.

Caution Do not start the pump until it has been filled with liquid and vented.

6.1 Frequency

Caution Motors types Siemens, MG 71 and MG 80 for supply voltages up to and including 440 V (see motor nameplate) must be protected against voltage peaks higher than 650 V between the supply terminals.

Grundfos motors

All three-phase Grundfos motors from frame size 90 and up can be connected to a frequency converter.

The connection of a frequency converter will often have the effect that the motor insulation system is loaded more and that the motor will be more noisy than during normal operation. In addition, large motors are more at risk of being loaded with bearing currents caused by the frequency converter.

In the case of frequency converter operation, consider the following:

- In 2-pole motors from 45 kW, 4-pole motors from 30 kW and 6-pole motors from 22 kW, one of the motor bearings must be electrically insulated to prevent damaging currents from passing through the motor bearings.
- In the case of noise-critical applications, the motor noise can be reduced by fitting an output filter between the motor and the frequency converter. In particularly noise-critical applications, we recommend that you fit a sinusoidal filter.
- The length of the cable between motor and frequency converter affects the motor load. Therefore, check that the cable length meets the specifications laid down by the frequency converter supplier. For supply voltages between 500 and 690 V, either fit a sinusoidal filter to reduce voltage peaks or use a motor with reinforced insulation.
- For supply voltages of 690 V, use a motor with reinforced insulation and fit a sinusoidal filter.

Note Grundfos MG motors do not have reinforced insulation. When it comes to reinforced insulation, other motor suppliers are able to supply such motors as FPV variants.

6.1.1 Other motor makes than Grundfos

Contact Grundfos or the

7. Startup

7.1 Flushing the pipe system

Caution

The pump is not designed to pump liquids containing solid particles such as pipe debris and welding slag. Before starting up the pump, the pipe system must be thoroughly cleaned, flushed and filled with clean water.

The warranty does not cover any damage caused by flushing the pipe system by means of the pump.

7.2 Priming

Caution

Do not start the pump until it has been filled with liquid and vented. To ensure correct venting, the vent screw must point upwards.

Closed systems or open systems where the liquid level is above the pump inlet:

1. Close the isolating valve on the outlet side and loosen the vent screw in the motor stool. See fig. 15.

Warning

Pay attention to the direction of the vent hole and make sure that the escaping liquid does not cause injury to persons or damage to the motor or other components.

In hot-liquid installations, pay special attention to the risk of injury caused by scalding hot liquid.

In cold-liquid installations, pay special attention to the risk of injury caused by the cold liquid.

2. Slowly open the isolating valve on the inlet side until a steady stream of liquid runs out of the vent hole.
3. Tighten the vent screw and completely open the isolating valve(s).

Open systems where the liquid level is below the pump inlet

The inlet pi be filled with liquid and vented before the pump is started.

1. Close the isolating valve on the outlet side and open the isolating valve on the inlet side.
2. Loosen the vent screw. See fig. 15.
3. Remove the plug from one of the pump flanges, depending on the pump location.
4. Pour liquid through the priming hole until the inlet pipe and the pump are filled with liquid.
5. Replace the plug and tighten securely.
6. Tighten the vent screw.

The inlet pipe can to some extent be filled with liquid and vented before it is connected to the pump. A priming device can also be installed before the pump.

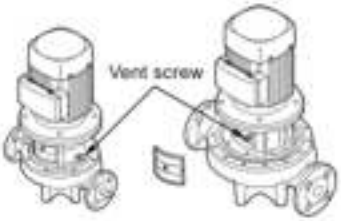

TM013 8126 0507

Fig. 15 Position of vent screw

7.3 Checking the direction of rotation

Do not start the pump to check the direction of rotation until it has been filled with liquid.

Note

Do not check the direction of rotation with the motor alone, as an adjustment of the shaft position is required when the coupling has been removed.

The correct direction of rotation is shown by arrows on the motor fan cover or on the pump housing.

7.4 Starting

1. Before starting the pump, completely open the isolating valve on the inlet side of the pump and leave the isolating valve on the outlet side almost closed.
2. Start the pump.
3. Vent the pump during starting by loosening the vent screw in the motor stool until a steady stream of liquid runs out of the vent hole. See fig. 15.

   Warning

   Pay attention to the direction of the vent hole and make sure that the escaping liquid does not cause injury to persons or damage to the motor or other components.

   In hot-liquid installations, pay special attention to the risk of injury caused by scalding hot liquid.

   In cold-liquid installations, pay special attention to the risk of injury caused by the cold liquid.

4. When the pipe system has been filled with liquid, slowly open the isolating valve on the outlet side until it is completely open.

7.5 Shaft seal run-in

The seal faces are lubricated by the pumped liquid, meaning that there may be a certain amount of leakage from the shaft seal.

When the pump is started up for the first time, or when a new shaft seal is installed, a certain run-in period is required before the leakage is reduced to an acceptable level. The time required for this depends on the operating conditions, i.e. every time the operating conditions change, a new run-in period will be started.

i [illegible] is, the leaking liquid will evaporate. As a result, no leakage will be detected.

However, liquids such as kerosene will not evaporate. The leakage may therefore be seen as a shaft seal failure.

7.6 Frequency of starts and stops

Frame size	Maximum number of starts per hour Number of poles 2	4	6
56-71	100	250	350
80-100	60	140	160
112-132	30	80	80
160-180	15	30	50
200-225	8	15	30
250-315	4	8	12

- On twin-head pumps, the duty and standby pumps must be alternated on a regular basis, i.e. once a week, to ensure an even distribution of the operating hours on both pumps. Pump change can be effected either manually or automatically by installing a suitable pump controller.
- If twin-head pumps are used for pumping domestic hot water, the duty and standby pumps must be alternated on a regular basis, i.e. once a day, to avoid blocking of the standby pump due to deposits (calcareous deposits, etc.). We recommend automatic pump change.

8. Maintenance and service

Warning

Before star [illegible], make sure that the power supply has been switched off and that it cannot be accidentally switched on.

Make sure that the escaping liquid does not cause injury to persons or damage to the motor or other components.

In hot-liquid installations, pay special attention to the risk of injury caused by scalding hot liquid.

In cold-liquid installations, pay special attention to the risk of injury caused by the cold liquid.

8.1 Pump

The pur [illegible].

If the pump is to be drained for a long period of inactivity, inject a few drops of silicone oil on the shaft between the motor stool and the coupling. This will prevent the shaft seal faces from sticking.

8.2 Motor

Check the motor at regular intervals. It is important to keep the motor clean in order to ensure adequate ventilation. If the pump is installed in a dusty environment, both pump and motor must be cleaned and checked regularly.

Lubrication

The bearings of motors up to 11 kW are greased for life and require no lubrication.

The bearings of motors of 11 kW and up must be greased in accordance with the indications on the motor nameplate.

Lubricate the motor with a lithium-based, high-temperature grease.

- The technical specification of the grease must correspond to DIN 51825, K3N, or better.
- The viscosity of the basic oil must be higher than 50 cSt (mm^2/s) at 40 °C (104 °F) and 8 cSt (mm^2/s) at 100 °C (212 °F).
- The grease filling rate must be 30-40 %.

8.3 Service

Warning

If the pump has been used for a liquid which is injurious to health or toxic, the pump will be classified as contaminated.

If Grundfos is requested to service the pump, Grundfos must be contacted with details about the pumped liquid, etc. before the pump is returned for service. Otherwise Grundfos can refuse to accept the pump for service.

Possible costs of re[illegible] paid by the customer.

8.4 Adjusting the shaft

If the motor has been removed during installation or for repair of the pump, the pump shaft must be adjusted after the motor has been replaced.

8.4.1 Pumps with two-part coupling

Pumps Series 100 and 200

Make sure that the shaft pin is fitted in the pump shaft.

Adjust the pump shaft as follows:

1. Remove the coupling guards using a screwdriver.
2. Fit the hexagon socket head screws in the coupling and leave loose.
3. Raise the coupling and the pi[illegible] possible (towards the motor) with a screwdriver or a similar tool so that the pump and motor shafts touch each other. See fig. 16.

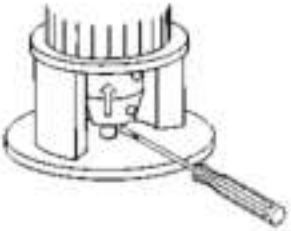

Fig. 16 Raising the coupling and the pump shaft

4. Tighte[illegible] head screws in the coupling to 5 Nm (0.5 kpm).
5. Check that the gaps either side of the coupling halves are equal.
6. Tighten the screws two and two (one side at a time) to the torque stated below. See fig. 17.

Hexagon socket head screw	Torque
M6 x 20	13 Nm (1.3 kpm)
M8 x 25	31 Nm (3.1 kpm)

7. Fit the coupling guards.

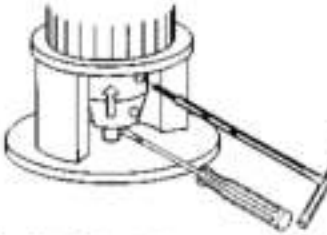

Fig. 17 Tightening the screws

8.4.2 Pumps with integral shaft/coupling

For pumps with integral shaft/coupling, we recommend that you do not remove the motor. If the motor has been removed, it is necessary to remove the motor stool in order to refit the motor correctly. Otherwise the shaft seal may be damaged.

8.5 Blanking flanges

For twin-head pumps, a blanking flange with a pump housing gasket is available. See fig. 18.

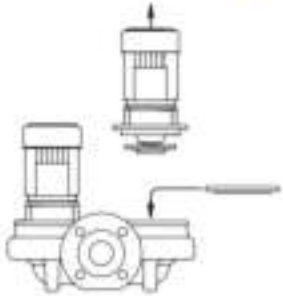

Fig. 18 Fitting the blanking flange

If one pump requires service, the blanking flange is fitted to allow the other pump to continue operating.

9. Technical data

9.1 Ambient temperature

Maximum 55 °C (131 °F).

9.2 Liquid temperature

-40 - +150 °C (-40 - +302 °F).

The maximum liquid tem[illegible] mechanical shaft seal type and the pump type.

Depending on the cast-iron version and the pump application, the maximum liquid temperature may be limited by local regulations and laws.

The maximum liquid temperature is marked on the pump nameplate.

Note: If the pump is operating with liquids at high temperatures, the life of the shaft seal may be reduced. It may be necessary to replace the shaft seal more often.

9.3 Operating pressure/test pressure

The p[illegible] made with water containing anti-corrosive additives at a temperature of 20 °C (68 °F).

Pressure stage	Operating pressure		Test pressure	
	[bar]	[MPa]	[bar]	[MPa]
PN 6	6	0.6	10	1.0
PN 6 / PN 10	10	1.0	15	1.5
PN 16	16	1.6	24	2.4
PN 25	25	2.5	38	3.8

9.4 Inlet pressure

To ensure optimum and quiet pump operation, the inlet pressure (system pressure) must be adjusted correctly. See the table on page 16.

For the calculation of specific inlet pressures, contact the local Grundfos company or see the data booklet for TP, TPD, TPE, TPED, TPE2, TPE2 D, TPE3, TPE3 D, if at hand.

9.5 Enclosure class

Closed drain hole in motor: IP55.

Open the drain hole in motor: IP44. See fig. 9.

9.6 Electrical data

See motor nameplate.

9.7 Sound pressure level

Pumps with single-phase motors

The sound pressure level of the pump is lower than 70 dB(A).

Pumps with three-phase motors

See the table on page 28.

9.8 Environment

Non-aggressive and non-explosive atmosphere.

Relative air humidity: Maximum 95 %.

10. Fault finding the product

Warning

Before removing the terminal box cover and before removal/dismantling the pump, make sure that the power supply has been switched off and that it cannot be accidentally switched on.

Make sure that the escaping liquid does not cause injury to persons or damage to the motor or other components.

In hot-liquid installations, pay special attention to the risk of injury caused by scalding hot liquid.

In cold-liquid installations, pay special attention to the risk of injury caused by the cold liquid.

Fault	Cause
1. Motor does not run when started.	a) Power supply failure. b) Fuses blown. c) Motor protection device has tripped. d) Main contacts in motor protection device are n the coil is faulty. e) Control circuit fuses are defective. f) Motor is defective.
2. Motor protection device trips immediately when power supply is switched on.	a) Power supply failure. b) Contacts in motor protection device are faulty. c) Cable connection is loose or faulty. d) Motor winding is defective. e) Pump is mechanically blocked. f) Overload setting too low.
3. Motor protection device trips occasionally.	a) Overload setting too low. b) Supply voltage periodically too low or too high. c) Differential pressure across pump too low.
4. Motor protection device has not tripped but the pump does not run.	a) Check the power supply. b) Check fuses. c) Check the main contacts in the moto f coil. d) Check the control circuit.
5. Pump capacity not constant.	a) Pump inlet pressure is too low. b) Inlet pipe/pump partly blocked by impurities. c) Pump draws in air.
6. Pump runs but gives no water.	a) Inlet pipe/pump blocked by impurities. b) Foot or non-return valve blocked in closed position. c) Leakage in the inlet pipe. d) Air in inlet pipe or pump. e) Motor rotates in the wrong direction.
7. Pump runs backwards when switched off.*	a) Leakage in the inlet pipe. b) Foot or non-return valve defective. c) Foot or non-return valve blocked in open or partly open position.
8. Leakage in the shaft seal.	a) Pump shaft position is incorrect. b) Shaft seal is defective.

Fault	Cause
9. Noise.	a) Pump is cavitating. b) Pump does not rotate freely (frictional resistance) because of incorrect pump shaft position. c) Frequency converter operation: See section *8.1 Frequency converter operation*. d) Resonance in the installation. e) Foreign bodies in the pump.
10. Pump runs constantly (applies only to pumps with automatic start/stop).	a) Stop pressure is too high in relation to the required quantity of water. b) The water consumption is larger than anticipated. c) Leakage in the outlet pipe. d) The direction of rotation of the pump is incorrect. e) Pipes, valves or strainer blocked by impurities. f) Pump controller, if used, is defective.
11. Period of operation is too long (applies only to pumps with automatic start/stop).	a) Stop pressure is too high in relation to the required quantity of water. b) Pipes, valves or strainer blocked by impurities. c) Pump partly blocked or seized up. d) The water consumption is larger than anticipated. e) Leakage in the outlet pipe.

* In twin-head pump installations, the standby pump will often rotate slowly.

11. Disposal

This product or parts of it m in environmentally sound way:

1. Use the public or private waste collection service.
2. If this is not possible, contact the nearest Grundfos company or service workshop.

Subject to alterations.

Appendix

GB: Inlet pressure stated in bar relative pressure (pressure ge n the suction side of the pump)

BG: Относително входно налягане в bar (стойност на манометъра в і на помпата)

CZ: Tlak na sání vyjádřený v barech je relativní tlak (hodnota na manometru měřená na sací straně čerpadla)

DE: Zulaufdruck in bar Relativdruck (Manometerdruck auf der Saugseite der Pumpe gemessen)

DK: Tilløbstrykket angivet i bar relativt tryk (manometerværdi målt på pumpens sugeside)

EE: Rõhk sisendis, antud baarides, on suhteline rõhk (manomeetri näit, mõõdetuna pumba imipoolel)

ES: Presión de aspiración indicada en bar como presión relativa (valor del manómetro medido en la aspiración de la bomba)

FI: Tulopaine ilmoitettuna baareina on suhteellinen paine (painemittarin lukema mitattu pumpun imupuolella)

FR: Pression d'entrée indiquée e à l'aide d'un manomètre placé sur le côté aspiration de la pompe)

GR: Πίεση ανωρρόφησης σε bar σχετικής πίεσης (μετρούμενη τιμή πίεσης στην πλευρά ανωρρόφησης της αντλίας)

HR: Ulazni tlak u b (manometarski tlak izmjeren na usisnoj strani crpke)

HU: Hozzáfolyási nyomás bar-ban, túlnyomás (nyomásmérő mért értéke a szivattyú szívóoldalán)

IT: Pressione d n bar (valore misurato con un manometro posto sul lato aspirazione della pompa)

LT: Manometrinis slėgis įvad ojama slėgio vertė siurblio įvado pusėje)

LV: Iepūdes spiediens tiek norādīts nosacītas spiediena mērvienībās, baros (manometra radījumi tiek mērīti sūkņa sūcpusē)

NL: Inlaatdruk weergegeven in bar relatieve druk (drukopner aan de zuigkant van de pomp)

PL: Ciśnienie na króćcu ssawnym pompy wyrażone w barach (mierzone manometrem na stronie ssawnej pompy)

PT: Pressão de entrada com a pressão relativa apresentada em bar (ponto de medida na parte de aspiração da bomba)

RO: Presiunea de intrare exprimată în bar ca presiune relativă (valoarea măsurată de manometru pe partea de aspirație a pompei)

RS: Ulazni pritisak je dat u barima relativnog pritiska (mano ena na usisnoj strani pumpe)

SE: Tilloppstrycket angivet i bar relativt tryck (manometervärde mätt på pumpens sugsida)

SI: Vhodni tlak v barih relativni tlak (izmerjena vrednost na sesalni strani črpalke)

SK: Vstupný tlak uvedený v baroch relativneho tlaku (hodnota na manometru meraná na sacej strane čerpadla)

AR: (ب سحب الضغط المدخل المذكور بالبار هو ضغط نسبي (قيمة قياس الضغط المقاسة على جهاز

50 Hz, 2-pole

Pump type (50 Hz)	p [bar]						
	20 °C	60 °C	90 °C	110 °C	120 °C	140 °C	150 °C
TP 25-50R/2	0.1	0.1	0.2	0.5	-	-	-
TP 25-80R/2	0.1	0.1	0.1	0.3	-	-	-
TP 25-90R/2	0.1	0.1	0.2	0.5	-	-	-
TP 32-50R/2	0.1	0.1	0.1	0.2	-	-	-
TP 32-80R/2	0.1	0.1	0.2	0.5	-	-	-
TP 32-90R/2	0.1	0.1	0.2	0.5	-	-	-
TP, TPD 32-60/2	0.1	0.1	0.2	1.0	1.5	3.2	-
TP, TPD 32-120/2	0.1	0.2	0.7	1.5	2.0	3.7	-
TP, TPD 32-150/2	0.1	0.3	0.8	1.6	2.1	3.8	-
TP, TPD 32-180/2	0.5	0.7	1.3	2.0	2.5	4.2	-
TP, TPD 32-230/2	0.7	0.9	1.4	2.2	2.7	4.4	-
TP, TPD 32-200/2	0.1	0.1	0.2	0.9	1.5	3.1	-
TP, TPD 32-250/2	0.1	0.1	0.3	1.0	1.6	3.2	-
TP, TPD 32-320/2	0.1	0.1	0.6	1.3	1.9	3.5	-
TP, TPD 32-380/2	0.1	0.2	0.7	1.4	2.0	3.6	-
TP, TPD 32-460/2	0.1	0.3	0.7	1.4	1.9	3.6	-
TP, TPD 32-580/2	0.3	0.4	0.9	1.6	2.2	3.8	-
TP 40-50/2	0.1	0.1	0.1	0.3	-	-	-
TP 40-80/2	0.1	0.1	0.2	0.5	-	-	-
TP 40-90/2	0.1	0.1	0.2	0.5	-	-	-
TP, TPD 40-60/2	0.1	0.1	0.5	1.2	1.8	3.5	-
TP, TPD 40-120/2	0.1	0.1	0.4	1.2	1.7	3.4	-
TP 40-180/2	0.1	0.2	0.7	1.5	2.0	3.7	-
TP, TPD 40-190/2	0.1	0.3	0.8	1.6	2.1	3.8	-
TP, TPD 40-230/2	0.7	0.9	1.4	2.2	2.7	4.4	-
TP, TPD 40-270/2	0.7	0.9	1.4	2.2	2.7	4.4	-
TP, TPD 40-240/2	0.1	0.1	0.4	1.1	1.7	3.3	-
TP, TPD 40-300/2	0.1	0.1	0.4	1.1	1.8	3.3	-
TP, TPD 40-360/2	0.3	0.4	0.9	1.6	2.1	3.8	-
TP, TPD 40-430/2	0.1	0.1	0.5	1.2	1.8	3.4	-
TP, TPD 40-530/2	0.1	0.1	0.6	1.3	1.9	3.5	-
TP, TPD 40-630/2	0.1	0.3	0.8	1.6	2.1	3.7	-
TP, TPD 50-60/2	0.1	0.1	0.4	1.1	1.7	3.4	-
TP, TPD 50-120/2	0.1	0.2	0.7	1.5	2.0	3.7	-
TP, TPD 50-180/2	0.1	0.3	0.7	1.4	2.0	3.7	-
TP, TPD 50-160/2	0.1	0.1	0.1	0.8	1.4	3.0	-
TP, TPD 50-190/2	0.1	0.1	0.1	0.8	1.4	3.0	-
TP, TPD 50-240/2	0.1	0.1	0.1	0.8	1.4	3.0	-
TP, TPD 50-290/2	0.1	0.1	0.2	0.9	1.5	3.1	-
TP, TPD 50-360/2	0.1	0.1	0.3	1.0	1.6	3.1	-

Pump type (50 Hz)	p [bar]						
	20 °C	60 °C	90 °C	110 °C	120 °C	140 °C	150 °C
TP, TPD 50-430/2	0.1	0.1	0.4	1.1	1.6	3.3	-
TP, TPD 50-420/2	0.1	0.1	0.3	1.1	1.6	3.2	-
TP, TPD 50-540/2	0.1	0.1	0.5	1.3	1.8	3.4	-
TP, TPD 50-630/2	0.1	0.1	0.6	1.4	1.9	3.6	-
TP, TPD 50-710/2	0.8	0.8	1.3	2.0	2.6	4.7	-
TP, TPD 50-830/2	0.6	0.7	1.3	2.0	2.5	4.1	-
TP, TPD 50-960/2	1.0	1.2	1.7	2.4	3.0	4.6	-
TP, TPD 65-60/2	0.1	0.3	0.8	1.5	2.1	3.6	-
TP, TPD 65-120/2	0.6	0.7	1.3	2.0	2.5	4.7	-
TP, TPD 65-180/2	0.3	0.5	1.0	1.8	2.3	4.0	-
TP, TPD 65-170/2	0.1	0.1	0.1	0.9	1.4	3.1	-
TP, TPD 65-210/2	0.1	0.1	0.2	0.9	1.5	3.1	-
TP, TPD 65-250/2	0.1	0.1	0.3	1.0	1.6	3.2	-
TP, TPD 65-340/2	0.1	0.1	0.2	0.9	1.4	3.1	-
TP, TPD 65-410/2	0.1	0.1	0.2	0.9	1.4	3.1	-
TP, TPD 65-460/2	0.1	0.1	0.2	1.0	1.5	3.1	-
TP, TPD 65-550/2	0.1	0.1	0.3	1.0	1.6	3.2	-
TP, TPD 65-660/2	0.1	0.1	0.4	1.1	1.6	3.3	-
TP, TPD 65-720/2	0.1	0.1	0.6	1.3	1.9	3.5	-
TP, TPD 65-930/2	0.8	0.8	1.3	2.0	2.6	4.7	-
TP, TPD 80-120/2	1.2	1.4	1.9	2.7	3.2	4.9	-
TP, TPD 80-140/2	0.1	0.2	0.7	1.4	1.9	3.6	-
TP, TPD 80-180/2	0.1	0.1	0.3	1.1	1.6	3.2	-
TP, TPD 80-210/2	0.1	0.1	0.4	1.1	1.7	3.3	-
TP, TPD 80-240/2	0.1	0.1	0.5	1.3	1.8	3.4	-
TP, TPD 80-250/2	0.1	0.3	0.8	1.6	2.1	3.7	-
TP, TPD 80-330/2	0.1	0.2	0.7	1.4	2.0	3.6	-
TP, TPD 80-400/2	0.2	0.4	0.9	1.6	2.2	3.8	-
TP, TPD 80-520/2	0.1	0.1	0.6	1.4	1.9	3.5	-
TP, TPD 80-570/2	0.1	0.3	0.8	1.6	2.1	3.7	-
TP, TPD 80-700/2	0.8	0.8	1.3	2.1	2.6	4.7	-
TP, TPD 100-120/2	1.9	2.1	2.6	3.4	3.9	5.6	-
TP, TPD 100-160/2	0.1	0.1	0.6	1.3	1.9	3.5	-
TP, TPD 100-200/2	0.1	0.1	0.4	1.2	1.7	3.3	-
TP, TPD 100-240/2	0.1	0.1	0.5	1.3	1.8	3.4	-
TP, TPD 100-250/2	0.8	0.8	1.3	2.0	2.5	4.7	-
TP, TPD100-310/2	0.8	0.8	1.3	2.0	2.6	4.7	-
TP, TPD 100-360/2	0.8	0.8	1.3	2.0	2.5	4.7	-
TP, TPD 100-390/2	1.0	1.2	1.7	2.4	3.0	4.6	-
TP, TPD 100-460/2	1.5	1.7	2.2	2.9	3.5	5.1	-
TP 100-530/2	1.8	1.8	2.2	3.2	3.7	5.1	6.6

Pump type (50 Hz)	p [bar]						
	20 °C	60 °C	90 °C	110 °C	120 °C	140 °C	150 °C
TP 100-650/2	1.4	1.6	2	3	3.5	5.1	6.4
TP 100-800/2	1.3	1.5	1.9	2.9	3.4	5	6.3
TP 100-950/2	1.3	1.5	1.9	2.9	3.4	5	6.3
TP 100-1040/2	1.3	1.5	1.8	2.8	3.3	4.9	6.2
TP 100-1200/2	1.3	1.5	1.8	2.8	3.3	4.9	6.2
TP 100-1410/2	1.3	1.5	1.8	2.8	3.3	4.9	6.2

50 Hz, 4-pole

Pump type (50 Hz)	p [bar]						
	20 °C	60 °C	90 °C	110 °C	120 °C	140 °C	150 °C
TP, TPD 32-30/4	0.1	0.1	0.1	0.8	1.5	3.1	-
TP, TPD 32-40/4	0.1	0.1	0.1	0.9	1.5	3.1	-
TP, TPD 32-60/4	0.1	0.1	0.3	1.1	1.8	3.3	-
TP, TPD 32-80/4	0.1	0.1	0.1	0.5	1.0	2.7	-
TP, TPD 32-100/4	0.1	0.1	0.1	0.5	1.1	2.7	-
TP, TPD 32-120/4	0.1	0.1	0.1	0.6	1.1	2.7	-
TP, TPD 40-30/4	0.1	0.1	0.2	0.9	1.5	3.2	-
TP 40-60/4	0.1	0.1	0.1	0.8	1.5	3.1	-
TP, TPD 40-90/4	0.1	0.1	0.3	1.0	1.8	3.3	-
TP, TPD 40-100/4	0.1	0.1	0.2	0.9	1.5	3.1	-
TP, TPD 40-110/4	0.1	0.1	0.1	0.6	1.2	2.8	-
TP, TPD 40-140/4	0.1	0.1	0.1	0.7	1.3	2.9	-
TP, TPD 50-30/4	0.1	0.1	0.1	0.9	1.5	3.1	-
TP, TPD 50-60/4	0.1	0.1	0.2	0.9	1.5	3.2	-
TP, TPD 50-90/4	0.1	0.1	0.1	0.6	1.1	2.8	-
TP, TPD 50-80/4	0.1	0.1	0.1	0.8	1.3	3.0	-
TP, TPD 50-120/4	0.1	0.1	0.1	0.7	1.3	2.9	-
TP, TPD 50-140/4	0.1	0.1	0.1	0.7	1.3	2.9	-
TP, TPD 50-190/4	0.1	0.1	0.1	0.9	1.5	3.0	-
TP, TPD 50-230/4	0.1	0.1	0.2	1.0	1.5	3.1	-
TP, TPD 65-30/4	0.1	0.2	0.7	1.5	2.0	3.7	-
TP, TPD 65-60/4	0.2	0.8	0.9	1.6	2.2	3.9	-
TP, TPD 65-90/4	0.1	0.1	0.1	0.6	1.1	2.7	-
TP, TPD 65-110/4	0.1	0.1	0.1	0.6	1.1	2.7	-
TP, TPD 65-130/4	0.1	0.1	0.1	0.6	1.1	2.8	-
TP, TPD 65-150/4	0.1	0.1	0.1	0.6	1.2	2.8	-
TP, TPD 65-170/4	0.1	0.1	0.1	0.6	1.2	2.8	-
TP, TPD 65-240/4	0.1	0.1	0.1	0.8	1.3	2.9	-
TP, TPD 80-30/4	0.8	1.0	1.5	2.2	2.8	4.5	-
TP, TPD 80-60/4	0.8	1.0	1.5	2.3	2.8	4.5	-
TP, TPD 80-70/4	0.1	0.1	0.1	0.8	1.3	2.9	-

Pump type (50 Hz)	p [bar]						
	20 °C	60 °C	90 °C	110 °C	120 °C	140 °C	150 °C
TP, TPD 80-90/4	0.1	0.1	0.1	0.7	1.2	2.8	-
TP, TPD 80-110/4	0.1	0.1	0.1	0.8	1.4	3.0	-
TP, TPD 80-150/4	0.1	0.1	0.1	0.8	1.9	2.9	-
TP, TPD 80-170/4	0.1	0.1	0.2	1.0	1.5	3.1	-
TP, TPD 80-240/4	0.1	0.1	0.3	1.0	1.5	3.2	-
TP, TPD 80-270/4	0.1	0.1	0.2	0.9	1.5	3.1	-
TP, TPD 80-340/4	0.1	0.1	0.3	1.1	1.8	3.2	-
TP, TPD 100-30/4	0.8	1.0	1.5	2.2	2.8	4.5	-
TP, TPD 100-60/4	0.8	0.8	1.3	2.0	2.8	4.3	-
TP, TPD 100-70/4	0.1	0.1	0.1	0.8	1.3	3.0	-
TP, TPD 100-90/4	0.1	0.1	0.1	0.9	1.4	3.0	-
TP, TPD 100-110/4	0.1	0.1	0.2	1.0	1.5	3.1	-
TP, TPD 100-130/4	0.1	0.1	0.8	1.3	1.9	3.5	-
TP 100-140/4	0.2	0.4	0.8	1.8	2.3	3.9	5.2
TP, TPD 100-170/4	0.3	0.5	1.0	1.7	2.3	3.9	5.2
TP, TPD 100-200/4	0.1	0.1	0.5	1.2	1.8	3.4	4.7
TP, TPD 100-250/4	0.1	0.2	0.7	1.4	2.0	3.6	4.9
TP, TPD 100-330/4	0.3	0.5	1.0	1.7	2.3	3.9	5.2
TP, TPD 100-370/4	0.3	0.5	1.0	1.7	2.3	3.9	5.2
TP, TPD 100-410/4	0.5	0.7	1.2	1.9	2.5	4.1	5.4
TP 125-60/4	0.1	0.1	0.1	0.8	1.4	3.0	-
TP 125-80/4	0.1	0.1	0.1	0.9	1.4	3.1	-
TP 125-95/4	0.1	0.1	0.2	0.9	1.5	3.1	-
TP, TPD 125-110/4	0.1	0.1	0.1	0.9	1.4	3.0	-
TP, TPD 125-130/4	0.1	0.1	0.2	0.9	1.5	3.1	-
TP 125-150/4	0.2	0.4	0.8	1.8	2.3	3.9	5.2
TP, TPD 125-160/4	0.1	0.1	0.2	1.0	1.5	3.1	-
TP, TPD 125-190/4	0.1	0.1	0.2	0.9	1.5	3.1	4.4
TP, TPD 125-230/4	0.1	0.1	0.3	1.0	1.8	3.2	4.5
TP, TPD 125-300/4	0.1	0.1	0.2	0.9	1.5	3.1	4.4
TP, TPD 125-340/4	0.1	0.1	0.3	1.0	1.5	3.2	4.5
TP, TPD 125-400/4	0.1	0.1	0.3	1.0	1.8	3.2	4.5
TP 150-70/4	0.1	0.1	0.3	1.1	1.8	3.2	-
TP 150-110/4	0.1	0.1	0.4	1.1	1.7	3.3	-
TP 150-155/4	0.1	0.1	0.5	1.2	1.8	3.4	-
TP 150-170/4	0.1	0.1	0.8	1.3	1.9	3.5	-
TP, TPD 150-130/4	0.1	0.1	0.4	1.1	1.8	3.3	4.6
TP, TPD 150-160/4	0.1	0.1	0.4	1.1	1.7	3.3	4.6
TP, TPD 150-200/4	0.1	0.1	0.4	1.1	1.7	3.3	4.6
TP, TPD 150-220/4	0.1	0.1	0.5	1.2	1.8	3.4	4.7
TP, TPD 150-250/4	0.1	0.1	0.8	1.3	1.9	3.5	4.8

Pump type (50 Hz)	p [bar]						
	20 °C	60 °C	90 °C	110 °C	120 °C	140 °C	150 °C
TP 150-260/4	0.1	0.1	0.5	1.2	1.8	3.4	4.7
TP 150-280/4	0.1	0.3	0.8	1.5	2.1	3.7	5.0
TP 150-340/4	0.1	0.2	0.7	1.5	2.0	3.6	4.9
TP 150-390/4	0.1	0.2	0.7	1.4	2.0	3.6	4.9
TP 150-450/4	0.1	0.1	0.5	1.2	1.8	3.4	4.7
TP 150-520/4	0.1	0.1	1.0	1.5	1.9	3.5	4.8
TP 150-660/4	0.1	0.2	0.7	1.4	1.9	3.6	4.9
TP 150-680/4	0.1	0.2	0.7	1.4	2.0	3.6	-
TP 200-50/4	0.3	0.4	0.9	1.7	2.2	3.8	-
TP 200-70/4	0.1	0.3	0.8	1.5	2.1	3.7	-
TP 200-90/4	0.1	0.2	0.7	1.4	2.0	3.6	-
TP 200-130/4	0.1	0.1	0.5	1.2	1.8	3.4	-
TP 200-150/4	0.1	0.1	0.4	1.2	1.7	3.3	-
TP 200-160/4	0.3	0.5	1.0	1.7	2.3	3.9	5.2
TP 200-190/4	0.2	0.4	0.9	1.6	2.2	3.8	5.1
TP 200-200/4	0.2	0.4	0.9	1.6	2.1	3.8	5.1
TP 200-240/4	0.1	0.2	0.7	1.4	2.0	3.6	4.9
TP 200-270/4	0.1	0.1	0.4	1.1	1.7	3.3	4.6
TP 200-290/4	0.1	0.1	0.6	1.3	1.9	3.5	4.8
TP 200-320/4	0.1	0.1	0.5	1.2	1.8	3.4	4.7
TP 200-330/4	0.1	0.1	0.3	1.1	1.6	3.2	4.5
TP 200-360/4	0.1	0.1	0.3	1.1	1.6	3.2	4.5
TP 200-400/4	0.1	0.1	0.3	1.0	1.6	3.2	4.5
TP 200-410/4	0.1	0.2	0.7	1.4	1.9	3.6	4.9
TP 200-470/4	0.1	0.1	0.4	1.1	1.6	3.3	4.6
TP 200-530/4	0.1	0.1	0.4	1.1	1.7	3.3	4.6
TP 200-590/4	0.1	0.2	0.7	1.4	2.0	3.6	4.9
TP 200-660/4	0.2	0.4	0.9	1.7	2.2	3.8	5.1
TP 250-280/4	0.1	0.1	0.1	0.8	1.4	3.1	-
TP 250-310/4	0.1	0.1	0.1	0.8	1.4	3.1	-
TP 250-390/4	0.1	0.1	0.1	0.8	1.4	3.1	-
TP 300-190/4	0.5	0.7	1.1	2.1	2.6	4.2	5.5
TP 300-220/4	0.3	0.5	0.9	1.9	2.4	4	5.3
TP 300-250/4	0.1	0.3	0.7	1.7	2.2	3.8	5.1
TP 300-290/4	0.5	0.7	1.1	2.1	2.6	4.2	5.5
TP 300-390/4	0.5	0.7	1.1	2.1	2.6	4.2	5.5
TP 300-420/4	0.5	0.7	1.1	2.1	2.6	4.2	5.5
TP 300-430/4	0.5	0.7	1.1	2.1	2.6	4.2	5.5
TP 300-500/4	0.4	0.6	1	2	2.5	4.1	5.4
TP 300-550/4	0.3	0.5	0.9	1.9	2.4	4	5.3

Pump type (50 Hz)	p [bar]						
	20 °C	60 °C	90 °C	110 °C	120 °C	140 °C	150 °C
TP 350-230/4	2.0	2.2	2.6	3.6	4.1	5.7	7.0
TP 350-280/4	2.0	2.2	2.6	3.6	4.1	5.7	7.0
TP 350-310/4	2.0	2.2	2.6	3.6	4.1	5.7	7.0
TP 350-360/4	1.5	1.7	2.1	3.1	3.6	5.2	6.5
TP 350-420/4	1.4	1.6	2.0	3.0	3.5	5.1	6.4
TP 350-480/4	1.3	1.5	1.9	2.9	3.4	5.0	6.3
TP 350-530/4	0.5	0.7	1.1	2.1	2.6	4.2	5.5
TP 350-650/4	0.4	0.6	1.0	2.0	2.5	4.1	5.4
TP 350-780/4	0.3	0.5	0.9	1.9	2.4	4.0	5.3

50 Hz, 6-pole

Pump type (50 Hz)	p [bar]						
	20 °C	60 °C	90 °C	110 °C	120 °C	140 °C	150 °C
TP, TPD 125-60/6	0.1	0.1	0.1	0.7	1.2	2.8	-
TP, TPD 125-70/6	0.1	0.1	0.1	0.7	1.3	2.9	-
TP, TPD 125-80/6	0.1	0.1	0.1	0.7	1.2	2.9	-
TP, TPD 125-100/6	0.1	0.1	0.1	0.8	1.4	3.0	-
TP, TPD 125-130/6	0.1	0.1	0.1	0.7	1.3	2.9	-
TP, TPD 125-160/6	0.1	0.1	0.1	0.7	1.3	2.9	-
TP, TPD 150-60/6	0.1	0.1	0.1	0.7	1.3	2.9	-
TP, TPD 150-70/6	0.1	0.1	0.1	0.7	1.3	2.9	-
TP, TPD 150-90/6	0.1	0.1	0.1	0.8	1.3	2.9	-
TP, TPD 150-110/6	0.1	0.1	0.1	0.8	1.3	2.9	-

60 Hz, 2-pole

Pump type (60 Hz)	p [bar]						
	20 °C	60 °C	90 °C	110 °C	120 °C	140 °C	150 °C
TP 32-80/2	0.4	0.6	0.8	1.2	1.7	3.4	-
TP 32-160/2	0.4	0.6	1.1	1.9	2.4	4.1	-
TP 32-220/2	0.7	0.9	1.4	2.2	2.7	4.4	-
TP 32-260/2	0.7	0.9	1.4	2.2	2.7	4.4	-
TP 32-330/2	0.7	0.9	1.4	2.2	2.7	4.4	-
TP, TPD 32-300/2	0.1	0.1	0.1	0.7	1.2	2.8	-
TP, TPD 32-360/2	0.1	0.1	0.1	0.7	1.2	2.8	-
TP, TPD 32-450/2	0.1	0.1	0.1	0.7	1.2	2.8	-
TP, TPD 32-550/2	0.1	0.1	0.1	0.7	1.2	2.9	-
TP, TPD 32-680/2	0.1	0.1	0.2	0.9	1.5	3.1	-
TP, TPD 32-820/2	0.5	0.7	1.2	1.9	2.5	4.1	-
TP 40-80/2	0.1	0.3	0.8	1.6	2.1	3.8	-
TP 40-160/2	0.1	0.2	0.7	1.5	2.0	3.7	-
TP 40-240/2	0.4	0.6	1.1	1.9	2.4	4.1	-

Pump type (60 Hz)	p [bar]						
	20 °C	60 °C	90 °C	110 °C	120 °C	140 °C	150 °C
TP 40-270/2	0.7	0.9	1.4	2.2	2.7	4.4	-
TP 40-330/2	0.7	0.9	1.4	2.2	2.7	4.4	-
TP 40-390/2	0.7	0.9	1.4	2.2	2.7	4.4	-
TP, TPD 40-400/2	0.1	0.1	0.1	0.9	1.4	2.1	-
TP, TPD 40-460/2	0.1	0.1	0.1	1.0	1.6	2.7	-
TP, TPD 40-530/2	0.1	0.1	0.4	1.1	1.7	3.3	-
TP, TPD 40-690/2	0.1	0.2	0.7	1.4	2.0	3.6	-
TP, TPD 40-820/2	0.1	0.3	0.8	1.8	2.1	3.7	-
TP, TPD 40-920/2	0.4	0.8	1.1	1.8	2.4	4.0	-
TP 50-80/2	0.1	0.1	0.8	1.4	1.9	3.8	-
TP 50-160/2	0.4	0.6	1.1	1.8	2.4	4.1	-
TP 50-240/2	0.3	0.5	1.0	1.8	2.3	4.0	-
TP, TPD 50-250/2	0.1	0.1	0.2	1.0	1.5	3.1	-
TP, TPD 50-300/2	0.1	0.1	0.3	1.0	1.6	3.2	-
TP, TPD 50-350/2	0.1	0.1	0.3	1.0	1.6	3.2	-
TP, TPD 50-410/2	0.1	0.1	0.4	1.1	1.6	3.3	-
TP, TPD 50-430/2	0.1	0.1	0.4	1.1	1.7	3.3	-
TP, TPD 50-530/2	0.1	0.1	0.5	1.3	1.8	3.5	-
TP, TPD 50-640/2	0.1	0.1	0.6	1.4	1.8	3.5	-
TP, TPD 50-720/2	0.1	0.3	0.8	1.8	2.1	3.7	-
TP, TPD 50-790/2	0.5	0.7	1.2	1.8	2.5	4.1	-
TP, TPD 50-880/2	0.8	1.0	1.5	2.2	2.8	4.4	-
TP 50-1050/2	1.1	1.3	1.8	2.5	3.1	4.7	-
TP 65-80/2	0.8	0.8	1.3	2.1	2.6	4.3	-
TP 65-160/2	1.1	1.3	1.8	2.6	3.1	4.8	-
TP 65-240/2	0.8	1.1	1.6	2.4	2.9	4.6	-
TP, TPD 65-200/2	0.1	0.1	0.9	1.0	1.5	3.2	-
TP, TPD 65-250/2	0.1	0.1	0.4	1.1	1.7	3.3	-
TP, TPD 65-340/2	0.1	0.1	0.2	1.0	1.5	3.1	-
TP, TPD 65-390/2	0.1	0.1	0.3	1.0	1.5	3.2	-
TP, TPD 65-480/2	0.1	0.1	0.3	1.0	1.6	3.2	-
TP, TPD 65-540/2	0.1	0.1	0.3	1.1	1.6	3.2	-
TP, TPD 65-630/2	0.1	0.1	0.4	1.1	1.7	3.3	-
TP, TPD 65-740/2	0.1	0.1	0.6	1.3	1.9	3.5	-
TP, TPD 65-910/2	0.1	0.2	0.7	1.5	2.0	3.6	-
TP, TPD 65-920/2	0.1	0.2	0.7	1.4	2.0	3.6	-
TP, TPD 65-1050/2	0.1	0.2	0.7	1.5	2.0	3.6	-
TP 80-160/2	2.1	2.3	2.8	3.6	4.1	5.8	-
TP, TPD 80-200/2	0.5	0.7	1.2	1.9	2.5	4.1	-
TP, TPD 80-240/2	0.1	0.2	0.7	1.4	2.0	3.6	-
TP, TPD 80-290/2	0.1	0.3	0.8	1.5	2.1	3.7	-

Pump type (60 Hz)	p [bar]						
	20 °C	60 °C	90 °C	110 °C	120 °C	140 °C	150 °C
TP, TPD 80-330/2	0.2	0.4	0.9	1.7	2.2	3.8	-
TP, TPD 80-400/2	0.6	0.8	1.3	2.1	2.6	4.2	-
TP, TPD 80-480/2	0.1	0.3	0.8	1.5	2.1	3.7	-
TP, TPD 80-530/2	0.2	0.4	0.9	1.6	2.1	3.8	-
TP, TPD 80-640/2	0.6	0.8	1.3	2.0	2.6	4.2	-
TP, TPD 80-750/2	0.6	0.8	1.3	2.0	2.6	4.2	-
TP, TPD 100-230/2	0.4	0.6	1.1	1.9	2.4	4.0	-
TP, TPD 100-300/2	0.2	0.4	0.9	1.8	2.2	3.8	-
TP, TPD 100-370/2	0.3	0.6	1.0	1.7	2.3	3.9	-
TP, TPD 100-350/2	0.9	1.1	1.8	2.3	2.9	4.5	-
TP, TPD 100-380/2	1.2	1.4	1.9	2.6	3.2	4.8	-
TP, TPD 100-530/2	1.7	1.9	2.4	3.2	3.7	5.3	-
TP, TPD 100-630/2	1.4	1.6	2.1	2.8	3.3	5.0	-
TP, TPD 100-700/2	2.0	2.2	2.7	4.4	5.0	6.6	-
TP 100-760/2	1.7	1.9	2.3	3.3	3.8	5.4	6.7
TP 100-940/2	1.8	1.8	2.2	3.2	3.7	5.3	6.6
TP 100-1040/2	1.8	1.8	2.2	3.2	3.7	5.3	6.6
TP 100-1200/2	1.9	2.1	2.5	3.5	4	5.6	6.9
TP 100-1360/2	1.8	2	2.4	3.4	3.9	5.5	6.8
TP 100-1510/2	1.8	2	2.4	3.4	3.9	5.5	6.8

60 Hz, 4-pole

Pump type (60 Hz)	p [bar]						
	20 °C	60 °C	90 °C	110 °C	120 °C	140 °C	150 °C
TP 32-40/4	0.1	0.1	0.1	0.9	1.2	2.1	-
TP 32-80/4	0.1	0.1	0.5	1.3	1.8	3.5	-
TP, TPD 32-120/4	0.1	0.1	0.1	0.7	1.3	2.9	-
TP, TPD 32-140/4	0.1	0.1	0.1	0.7	1.3	2.9	-
TP, TPD 32-190/4	0.1	0.1	0.1	0.8	1.2	3.0	-
TP 40-40/4	0.1	0.1	0.3	1.1	1.8	3.3	-
TP 40-80/4	0.1	0.1	0.2	1.0	1.5	3.2	-
TP, TPD 40-110/4	0.1	0.1	0.1	0.6	1.2	2.8	-
TP, TPD 40-150/4	0.1	0.1	0.1	0.7	1.3	2.9	-
TP, TPD 40-180/4	0.1	0.1	0.1	0.7	1.3	2.9	-
TP, TPD 40-230/4	0.1	0.1	0.1	0.8	1.3	3.0	-
TP 50-40/4	0.1	0.1	0.3	1.1	1.8	3.3	-
TP 50-80/4	0.1	0.1	0.3	1.1	1.8	3.3	-
TP, TPD 50-100/4	0.1	0.1	0.1	0.7	1.3	2.9	-
TP, TPD 50-115/4	0.1	0.1	0.1	0.8	1.2	3.0	-
TP, TPD 50-130/4	0.1	0.1	0.1	0.9	1.2	3.0	-
TP, TPD 50-180/4	0.1	0.1	0.1	0.8	1.3	3.0	-

Pump type (60 Hz)	p [bar]						
	20 °C	60 °C	90 °C	110 °C	120 °C	140 °C	150 °C
TP, TPD 50-240/4	0.1	0.1	0.2	0.9	1.5	3.1	-
TP, TPD 50-270/4	0.1	0.1	0.3	1.0	1.6	3.2	-
TP, TPD 50-340/4	0.1	0.2	0.7	1.4	2.0	3.8	-
TP 65-40/4	0.4	0.6	1.1	1.9	2.4	4.1	-
TP 65-80/4	0.7	0.9	1.4	2.2	2.7	4.4	-
TP, TPD 65-130/4	0.1	0.1	0.1	0.8	1.2	2.8	-
TP, TPD 65-150/4	0.1	0.1	0.1	0.8	1.2	2.8	-
TP, TPD 65-190/4	0.1	0.1	0.1	0.8	1.2	2.8	-
TP, TPD 65-230/4	0.1	0.1	0.1	0.7	1.1	2.9	-
TP, TPD 65-310/4	0.1	0.1	0.1	0.7	1.1	2.9	-
TP, TPD 65-330/4	0.1	0.1	0.1	0.3	0.8	2.5	-
TP 80-40/4	1.5	1.7	2.2	3.0	3.5	5.2	-
TP 80-80/4	1.8	1.8	2.3	3.1	3.6	5.3	-
TP, TPD 80-110/4	0.1	0.1	0.1	0.8	1.4	3.0	-
TP, TPD 80-150/4	0.1	0.1	0.1	0.8	1.3	2.9	-
TP, TPD 80-170/4	0.1	0.1	0.1	0.8	1.3	3.0	-
TP, TPD 80-230/4	0.1	0.1	0.3	1.0	1.8	3.2	-
TP, TPD 80-280/4	0.1	0.1	0.2	1.0	1.5	3.1	-
TP, TPD 80-340/4	0.1	0.1	0.3	1.0	1.6	3.2	-
TP, TPD 80-410/4	0.1	0.1	0.5	1.2	1.8	3.4	-
TP, TPD 80-460/4	0.1	0.1	0.6	1.3	1.9	3.5	-
TP, TPD 80-510/4	0.1	0.2	0.7	1.5	2.0	3.6	-
TP 100-40/4	1.4	1.6	2.1	2.9	3.4	5.1	-
TP 100-80/4	1.7	1.8	1.8	2.7	3.2	4.8	-
TP, TPD 100-100/4	0.1	0.1	0.2	0.8	1.5	3.1	-
TP, TPD 100-130/4	0.1	0.1	0.3	1.0	1.6	3.2	-
TP, TPD 100-150/4	0.1	0.1	0.8	1.3	1.8	3.5	-
TP, TPD 100-170/4	0.1	0.1	0.8	1.3	1.8	3.5	-
TP, TPD 100-200/4	0.1	0.1	0.4	1.1	1.7	3.3	4.6
TP, TPD 100-240/4	0.1	0.1	0.8	1.3	1.9	3.5	4.8
TP, TPD 100-260/4	0.6	0.8	1.3	2.1	2.7	4.3	5.6
TP, TPD 100-290/4	0.5	0.7	1.2	2.0	2.5	4.1	5.4
TP, TPD 100-340/4	0.8	0.8	1.3	2.0	2.6	4.2	5.5
TP, TPD 100-350/4	0.2	0.4	0.8	1.7	2.3	3.9	5.2
TP, TPD 100-390/4	0.7	0.8	1.4	2.1	2.7	4.3	5.6
TP, TPD 100-470/4	0.8	1.1	1.6	2.3	2.9	4.5	5.8
TP 100-560/4	0.1	0.3	0.7	1.7	2.2	3.8	5.1
TP 125-80/4	0.1	0.1	0.1	0.8	1.4	3.0	-
TP 125-110/4	0.1	0.1	0.2	0.9	1.5	3.1	-
TP 125-135/4	0.1	0.1	0.3	1.1	1.8	3.3	-
TP, TPD 125-130/4	0.1	0.1	0.3	1.0	1.8	3.2	-

Pump type (60 Hz)	p [bar]						
	20 °C	60 °C	90 °C	110 °C	120 °C	140 °C	150 °C
TP, TPD 125-160/4	0.1	0.1	0.3	1.1	1.6	3.2	-
TP, TPD 125-200/4	0.1	0.1	0.2	0.9	1.4	3.1	-
TP, TPD 125-230/4	0.1	0.1	0.4	1.1	1.7	3.3	-
TP 125-220/4	0.1	0.1	0.4	1.1	1.7	3.3	4.5
TP, TPD 125-280/4	0.1	0.1	0.4	1.1	1.7	3.3	4.5
TP, TPD 125-340/4	0.1	0.1	0.5	1.2	1.8	3.4	4.6
TP, TPD 125-365/4	0.1	0.5	1.0	1.7	2.3	3.9	5.2
TP, TPD 125-420/4	0.1	0.1	0.4	1.0	1.8	3.2	4.5
TP, TPD 125-480/4	0.1	0.1	0.5	1.2	1.8	3.4	4.7
TP 125-550/4	0.1	0.4	0.7	1.7	2.2	3.8	5.1
TP 125-580/4	0.1	0.4	0.7	1.7	2.2	3.8	5.1
TP 150-130/4	0.1	0.1	0.5	1.2	1.8	3.4	-
TP 150-160/4	0.1	0.2	0.7	1.5	2.0	3.6	-
TP 150-200/4	0.2	0.4	0.9	1.8	2.1	3.8	-
TP 150-220/4	0.3	0.5	1.0	1.7	2.3	3.9	-
TP, TPD 150-180/4	0.1	0.3	0.7	1.4	1.9	3.6	4.9
TP, TPD 150-210/4	0.1	0.3	0.7	1.4	2.0	3.6	4.9
TP, TPD 150-240/4	0.1	0.3	0.7	1.5	2.0	3.6	4.9
TP, TPD 150-300/4	0.1	0.4	0.8	1.5	2.1	3.7	5.0
TP, TPD 150-340/4	0.1	0.4	0.8	1.5	2.1	3.7	5.0
TP 150-360/4	0.4	0.5	1.0	1.8	2.4	4.0	5.3
TP 150-400/4	0.1	0.1	0.1	0.8	1.4	3.1	4.4
TP 150-440/4	0.1	0.1	0.4	1.1	1.7	3.3	4.6
TP 150-480/4	0.1	0.1	0.5	1.4	1.8	3.4	4.7
TP 150-610/4	0.1	0.2	0.7	1.4	2	3.6	4.9
TP 150-700/4	0.1	0.3	0.8	1.5	2.1	3.7	5.0
TP 150-810/4	0.4	0.4	0.9	1.7	2.2	3.8	5.1
TP 150-960/4	0.4	0.8	1.1	1.8	2.3	3.8	5.1
TP 200-80/4	0.9	1.1	1.8	2.3	2.9	4.5	-
TP 200-110/4	0.5	0.8	1.1	1.9	2.4	4.0	-
TP 200-140/4	0.3	0.5	1	1.7	2.3	3.9	-
TP 200-190/4	0.2	0.4	0.9	1.8	2.2	3.8	-
TP 200-210/4	0.1	0.2	0.7	1.4	2	3.8	-
TP 200-250/4	0.9	1.0	1.5	2.4	2.8	4.4	5.7
TP 200-280/4	0.7	0.9	1.4	2.1	2.7	4.3	5.6
TP 200-320/4	0.6	0.8	1.4	2.0	2.6	4.2	5.5
TP 200-360/4	0.4	0.6	1.1	1.8	2.4	4.0	5.3
TP 200-390/4	0.4	0.5	1.0	1.7	2.2	3.9	5.2
TP 200-400/4	0.1	0.1	0.6	1.4	1.9	3.6	4.9
TP 200-430/4	0.1	0.1	0.6	1.4	1.9	3.6	4.9
TP 200-440/4	0.1	0.2	0.7	1.5	2.0	3.7	5.0

Pump type (60 Hz)	p [bar]						
	20 °C	60 °C	90 °C	110 °C	120 °C	140 °C	150 °C
TP 200-490/4	0.1	0.1	0.1	0.8	1.4	3.1	4.4
TP 200-500/4	0.2	0.4	0.9	1.6	2.2	3.9	5.2
TP 200-540/4	0.1	0.1	0.1	0.8	1.4	3.1	4.4
TP 200-600/4	0.1	0.1	0.1	0.8	1.4	3.1	4.4
TP 200-680/4	0.1	0.1	0.1	0.8	1.4	3.1	4.4
TP 200-770/4	0.1	0.2	0.7	1.4	2.0	3.7	5.0
TP 250-450/4	1.5	1.7	2.2	2.9	3.5	5.2	-
TP 250-530/4	1.5	1.7	2.2	2.9	3.5	5.2	-
TP 250-580/4	1.4	1.8	2.1	2.9	3.4	5.1	-
TP 300-230/4	0.8	1.0	1.4	2.4	2.9	4.5	5.8
TP 300-270/4	0.7	0.9	1.3	2.3	2.8	4.4	5.7
TP 300-360/4	0.7	0.9	1.3	2.3	2.8	4.4	5.7
TP 300-370/4	0.8	1.0	1.4	2.4	2.9	4.5	5.8
TP 300-440/4	0.8	1.0	1.4	2.4	2.9	4.5	5.8
TP 300-550/4	0.8	1.0	1.4	2.4	2.9	4.5	5.8
TP 300-630/4	0.8	1.0	1.4	2.4	2.9	4.5	5.8
TP 300-640/4	0.7	0.9	1.3	2.3	2.8	4.4	5.7
TP 300-750/4	0.7	0.9	1.3	2.3	2.8	4.4	5.7
TP 350-280/4	2.0	2.2	2.6	3.6	4.1	5.7	7.0
TP 350-330/4	1.9	2.1	2.5	3.5	4.0	5.6	6.9
TP 350-390/4	1.9	2.1	2.5	3.5	4.0	5.6	6.9
TP 350-440/4	1.9	2.1	2.5	3.5	4.0	5.6	6.9
TP 350-450/4	2.0	2.2	2.6	3.6	4.1	5.7	7.0
TP 350-540/4	2.0	2.2	2.6	3.6	4.1	5.7	7.0
TP 350-680/4	2.0	2.2	2.6	3.6	4.1	5.7	7.0

Maximum sound pressure level

Three-phase motors [kW]	50 Hz [dB(A)]			60 Hz [dB(A)]	
	2-pole	4-pole	6-pole	2-pole	4-pole
0.12	< 70	< 70	-	< 70	< 70
0.18	< 70	< 70	-	< 70	< 70
0.25	56	51	-	< 70	45
0.37	56	45	-	57	45
0.55	57	47	-	58	45
0.75	57	59.5	-	57	49
1.1	57	49.5	-	58	53
1.5	58	50	47	58	53
2.2	60	57	52	65	55
3.0	59.5	57	63	53.5	55
4.0	63	58	63	67.5	57
5.5	63	60	63	68	62
7.5	60	57	66	65	62
11.0	60	53	-	64.5	66
15.0	60	66	-	65	66
18.5	60.5	63	-	65.5	63
22.0	65.5	63	-	70.5	63
30.0	70	65	-	75	65
37.0	71	66	-	75	65
45.0	67	66	-	75	65
55.0	72	67	-	75	68
75.0	74	71	-	77	71
90.0	74	71	-	77	71
110.0	76	71	-	83	75
132.0	76	71	-	83	75
160.0	76	71	-	83	75
200.0	-	71	-	83	75
250.0	-	73	-	86	77
315.0	-	73	-	-	77
355.0	-	75	-	-	-
400.0	-	75	-	-	-
500.0	-	75	-	-	-
560.0	-	78	-	-	-
630.0	-	78	-	-	-

TP, TPE pumps from 11 kW and up suspended in the pipes

Pump type	PN 16	PN 25	P2 [kW]							
50 Hz										
TP, TPE 65-460/2	-		11					-		
TP, TPE 65-550/2	-		11					-		-
TP, TPE 65-660/2	-		15					-		
TP, TPE 65-720/2	-		22					-		
TP, TPE 80-330/2	-		11					-		-
TP, TPE 80-400/2	-		15					-		
TP, TPE 80-520/2	-		18.5					-		
TP, TPE 80-570/2	●	-	22					●		
TP, TPE 100-250/2	-		11					-		
TP, TPE 100-310/2	-		15					-		
TP, TPE 100-360/2	-		18.5					-		
TP, TPE 100-390/2	-		22					-		
TP, TPE 80-340/4	-		11					-		
TP, TPE 100-250/4	-	-	11					-		
TP, TPE 100-330/4	-	-	15					-		
TP, TPE 100-370/4	-	-	18.5					-		
TP 100-410/4	●	●	22					●		
TP, TPE 125-190/4	-	-	11					-		
TP, TPE 125-230/4	-	-	15					-		
TP, TPE 125-300/4	-	-	18.5					-		
TP 125-340/4	-	-	22					-		
TP, TPE 150-200/4	-	-	15					-		
TP, TPE 150-220/4	-	-	18.5					-		
TP 150-250/4	-	-	22					-		-
TP, TPE 150-260/4		-	18.5			-				
TP 150-280/4		-	22			-				
TP 150-340/4		●	30			-				
TP 150-390/4		●	37			-				
TP 150-450/4		●	45			-				
TP 150-520/4		●	55			-				
TP 150-660/4		●	75			-				
TP, TPE 200-160/4		-	15			-				
TP, TPE 200-190/4		-	18.5			-				
TP 200-200/4		-	22			-				
TP 200-240/4		-	30			-				
TP 200-270/4		●	37			-				
TP 200-320/4		●	45			-				
TP 200-330/4		●	37			-				
TP 200-360/4		●	37			-				
TP 200-400/4		●	55			-				
TP 200-410/4		●	75			-				
TP 200-470/4		●	75			-				

Pump type	PN 16	PN 25	P2 [kW]								
TP 300-190/4		-	30		-					
TP 300-220/4		•	37		-					—
TP 300-250/4		•	45		-					
TP 300-290/4		•	55		-					
TP 300-390/4		•	75		-					—
TP 300-420/4		•	90		-					
TP 300-430/4		•	110		-					
TP 300-500/4		•	132		-					—
TP 300-550/4		•	160		-					
TP 350-230/4		•	55		-					
TP 350-280/4	-	•	75		•					—
TP 350-310/4		•	90		-					
TP 350-360/4		•	110		-					
TP 350-420/4		•	132		-					
TP 350-480/4		•	160		-					
TP 350-530/4		•	200		-					
TP 350-650/4		•	250		-					
TP 350-780/4		•	315		-					
60 Hz										
TP, TPE 65-480/2	-		11					-		—
TP, TPE 65-540/2	-		15					-		—
TP, TPE 65-630/2	-		18.5					-		—
TP, TPE 65-740/2	-		22					-		—
TP, TPE 80-330/2	-		11					-		—
TP, TPE 80-400/2	-		15					-		—
TP, TPE 80-480/2	-		18.5					-		—
TP, TPE 80-530/2	-		22					-		—
TP, TPE 100-300/2	-		11					-		-
TP, TPE 100-370/2	-		15					-		—
TP, TPE 100-350/2	-		18.5					-		—
TP, TPE 100-380/2	-		22					-		-
TP, TPE 80-340/4	-		11					-		—
TP, TPE 80-410/4	-		15					-		—
TP, TPE 80-460/4	-		18.5					-		-
TP 80-510/4	-		22					-		—
TP, TPE 100-240/4	-	-	11		-			-		—
TP, TPE 100-260/4	•	-	11					•		
TP, TPE 100-290/4	-	-	15		-			-		—
TP, TPE 100-340/4	-	-	18.5		-			-		—
TP 100-350/4	-		22					-		-
TP 100-390/4	-	-	22		-			-		—
TP 100-470/4		-	30		-					
TP 100-560/4		•	37		-					—
TP, TPE 125-200/4	-		11					-		—

Pump type	PN 16	PN 25	P2 [kW]								
TP, TPE 125-230/4	-		[illegible]						-		—
TP, TPE 125-220/4		-	[illegible]						-		-
TP, TPE 125-280/4	-	-	[illegible]						-		—
TP 125-340/4	-	-	[illegible]						-		—
TP 125-365/4		•	[illegible]		-						—
TP 125-420/4		-	[illegible]		-						
TP 125-480/4		•	[illegible]		-						
TP 125-550/4		•	[illegible]		-						—
TP 125-580/4		•	[illegible]		-						
TP, TPE 150-180/4	-	-	[illegible]						-		—
TP, TPE 150-210/4	•	•	18.5						•		
TP 150-240/4	-	-	[illegible]						-		—
TP 150-300/4		-	[illegible]		-						
TP 150-340/4		•	[illegible]		-						
TP 150-360/4		-	[illegible]		-						
TP 150-400/4		•	[illegible]		-						
TP 150-440/4		•	[illegible]		-						
TP 150-480/4		•	[illegible]		-						
TP 150-610/4		•	[illegible]		-						
TP 150-810/4		•	[illegible]		-						
TP 150-960/4		•	[illegible]		-						
TP 200-250/4		-	[illegible]		-						
TP 200-400/4		•	[illegible]		-						
TP 200-430/4		•	[illegible]		-						
TP 300-230/4		•	[illegible]		-						
TP 300-270/4		•	[illegible]		-						
TP 300-360/4		•	[illegible]		-						—
TP 300-370/4		•	[illegible]		-						
TP 300-440/4		•	[illegible]		-						
TP 300-550/4		•	[illegible]		-						—
TP 300-630/4		•	[illegible]		-						
TP 300-640/4		•	[illegible]		-						
TP 300-750/4		•	[illegible]		-						—
TP 350-280/4		•	[illegible]		-						
TP 350-330/4		•	[illegible]		-						
TP 350-390/4	-	•	132		•						—
TP 350-440/4		•	[illegible]		-						
TP 350-450/4		•	[illegible]		-						
TP 350-540/4		•	[illegible]		-						—
TP 350-680/4		•	[illegible]		-						

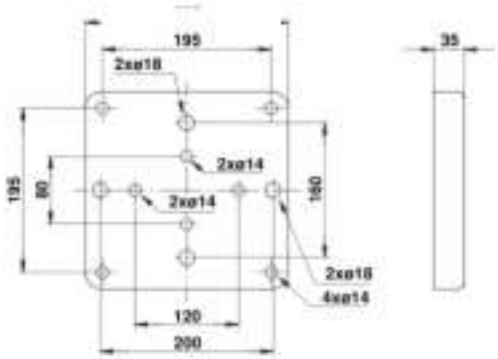

TM00 9835 0497

Fig. 1

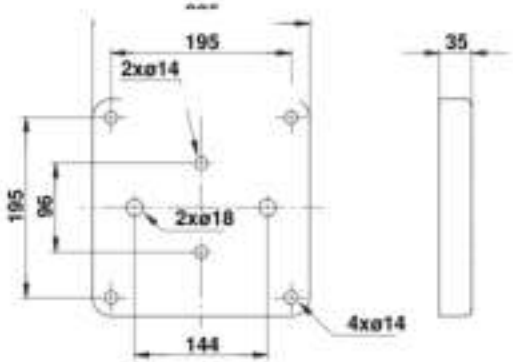

TM00 3765 5097

Fig. 2

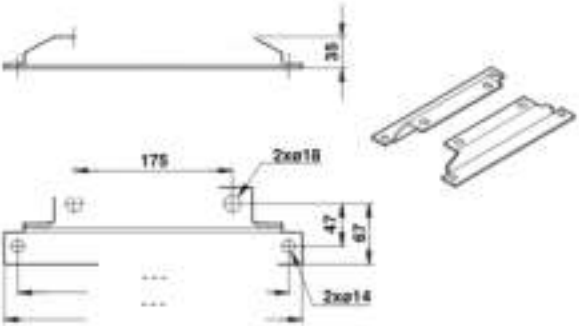

TM02 5336 2602

Fig. 3

Argentina
Bombas GRUNDFOS de Argentina S.A.
Ruta Panamericana km. 37.500 Centro Industrial Garin
1619 Garin Pcia. de B.A.
Phone: +54-3327 414 444
Telefax: +54-3327 45 3190

Australia
GRUNDFOS Pumps Pty. Ltd.
P.O. Box 2040
Regency Park
South Australia 5942
Phone: +61-8-8461-4611
Telefax: +61-8-8340 0155

Austria
GRUNDFOS Pumpen Vertrieb Ges.m.b.H.
Grundfosstraße 2
A-5082 Grödig/Salzburg
Tel.: +43-6246-883-0
Telefax: +43-6246-883-30

Belgium
N.V. GRUNDFOS Bellux S.A.
Boomsesteenweg 81-83
B-2630 Aartselaar
Tél.: +32-3-870 7300
Télécopie: +32-3-870 7301

Belarus
Представительство ГРУНДФОС в Минске
220125, Минск
ул. Шафарнянская, 11, оф. 56, БЦ «Порт»
Тел.: +7 (375 17) 286 39 72/73
Факс: +7 (375 17) 286 39 71
E-mail: minsk@grundfos.com

Bosnia
GRUNDFOS Sarajevo
Zmaja od Bosne 7-7A,
BH-71000 Sarajevo
Phone: +387 33 592 480
Telefax: +387 33 590 465
www.ba.grundfos.com
e-mail: grundfos@bih.net.ba

Brazil
BOMBAS GRUNDFOS DO BRASIL
Av. Humberto de Alencar Castelo Branco, 630
CEP 09850 - 300
São Bernardo do Campo - SP
Phone: +55-11 4393 5533
Telefax: +55-11 4343 5015

Bulgaria
Grundfos Bulgaria EOOD
Slatina District
Iztochna Tangenta street no. 100
BG - 1592 Sofia
Tel. +359 2 49 22 200
Fax. +359 2 49 22 201
email: bulgaria@grundfos.bg

Canada
GRUNDFOS Canada Inc.
2941 Brighton Road
Oakville, Ontario
L6H 6C9
Phone: +1-905 829 9533
Telefax: +1-905 829 9512

China
GRUNDFOS Pumps (Shanghai) Co. Ltd.
10F The Hub, No. 33 Suhong Road
Minhang District
Shanghai 201106
PRC
Phone: +86 21 612 252 22
Telefax: +86 21 612 253 33

Croatia
GRUNDFOS CROATIA d.o.o.
Buzinski prilaz 38, Buzin
HR-10010 Zagreb
Phone: +385 1 6595 400
Telefax: +385 1 6595 499
www.hr.grundfos.com

Czech Republic
GRUNDFOS s.r.o.
Čajkovského 21
779 00 Olomouc
Phone: +420-585-716 111
Telefax: +420-585-716 299

Denmark
GRUNDFOS DK A/S
Martin Bachs Vej 3
DK-8850 Bjerringbro
Tlf.: +45-87 50 50 50
Telefax: +45-87 50 51 51
E-mail: info_GDK@grundfos.com
www.grundfos.com/DK

Estonia
GRUNDFOS Pumps Eesti OÜ
Peterburi tee 92G
11415 Tallinn
Tel: + 372 606 1690
Fax: + 372 606 1691

Finland
OY GRUNDFOS Pumput AB
Trukkikuja 1
FI-01360 Vantaa
Phone: +358-(0) 207 889 500
Telefax: +358-(0) 207 889 550

France
Pompes GRUNDFOS Distribution S.A.
Parc d'Activités de Chesnes
57, rue de Malacombe
F-38290 St. Quentin Fallavier (Lyon)
Tél.: +33-4 74 82 15 15
Télécopie: +33-4 74 94 10 51

Germany
GRUNDFOS GMBH
Schütenstr. 33
40699 Erkrath
Tel.: +49-(0) 211 929 69-0
Telefax: +49-(0) 211 929 69-3799
e-mail: infoservice@grundfos.de
Service in Deutschland:
e-mail: kundendienst@grundfos.de

Greece
GRUNDFOS Hellas A.E.B.E.
20th km. Athinon-Markopoulou Av.
P.O. Box 71
GR-19002 Peania
Phone: +0030-210-66 83 400
Telefax: +0030-210-66 46 273

Hong Kong
GRUNDFOS Pumps (Hong Kong) Ltd.
Unit 1, Ground floor
Siu Wai Industrial Centre
29-33 Wing Hong Street &
68 King Lam Street, Cheung Sha Wan
Kowloon
Phone: +852-27861706 / 27861741
Telefax: +852-27858664

Hungary
GRUNDFOS Hungária Kft.
Park u. 8
H-2045 Törökbálint,
Phone: +36-23 511 110
Telefax: +36-23 511 111

India
GRUNDFOS Pumps India Private Limited
118 Old Mahabalipuram Road
Thoraipakkam
Chennai 600 096
Phone: +91-44 2496 6800

Indonesia
PT. GRUNDFOS POMPA
Graha Intirub Lt. 2 & 3
Jln. Cililitan Besar No.454. Makasar,
Jakarta Timur
ID-Jakarta 13650
Phone: +62 21-469-51900
Telefax: +62 21-460 6910 / 460 6901

Ireland
GRUNDFOS (Ireland) Ltd.
Unit A, Merrywell Business Park
Ballymount Road Lower
Dublin 12
Phone: +353-1-4089 800
Telefax: +353-1-4089 830

Italy
GRUNDFOS Pompe Italia S.r.l.
Via Gran Sasso 4
I-20060 Truccazzano (Milano)
Tel.: +39-02-95838112
Telefax: +39-02-95309290 / 95838461

Japan
GRUNDFOS Pumps K.K.
1-2-3, Shin-Miyakoda, Kita-ku,
Hamamatsu
431-2103 Japan
Phone: +81 53 428 4760
Telefax: +81 53 428 5005

Korea
GRUNDFOS Pumps Korea Ltd.
6th Floor, Aju Building 679-5
Yeoksam-dong, Kangnam-ku, 135-916
Seoul, Korea
Phone: +82-2-5317 600
Telefax: +82-2-5633 725

Latvia
SIA GRUNDFOS Pumps Latvia
Deglava biznesa centrs
Augusta Deglava ielā 60, LV-1035, Rīga,
Tālr.: + 371 714 9640, 7 149 641
Fakss: + 371 914 9646

Lithuania
GRUNDFOS Pumps UAB
Smolensko g. 6
LT-03201 Vilnius
Tel: + 370 52 395 430
Fax: + 370 52 395 431

Malaysia
GRUNDFOS Pumps Sdn. Bhd.
7 Jalan Peguam U1/25
Glenmarie Industrial Park
40150 Shah Alam
Selangor
Phone: +60-3-5569 2922
Telefax: +60-3-5569 2866

Mexico
Bombas GRUNDFOS de México S.A. de C.V.
Boulevard TLC No. 15
Parque Industrial Stiva Aeropuerto
Apodaca, N.L. 66600
Phone: +52-81-8144 4000
Telefax: +52-81-8144 4010

Netherlands
GRUNDFOS Netherlands
Veluwezoom 35
1326 AE Almere
Postbus 22015
1302 CA ALMERE
Tel.: +31-88-478 6336
Telefax: +31-88-478 6332
E-mail: info_gnl@grundfos.com

New Zealand
GRUNDFOS Pumps NZ Ltd.
17 Beatrice Tinsley Crescent
North Harbour Industrial Estate
Albany, Auckland
Phone: +64-9-415 3240
Telefax: +64-9-415 3250

Norway
GRUNDFOS Pumper A/S
Strømsveien 344
Postboks 235, Leirdal
N-1011 Oslo
Tlf.: +47-22 90 47 00
Telefax: +47-22 32 21 50

Poland
GRUNDFOS Pompy Sp. z o.o.
ul. Klonowa 23
Baranowo k. Poznania
PL-62-081 Przeźmierowo
Tel: (+48-61) 650 13 00
Fax: (+48-61) 650 13 50

Portugal
Bombas GRUNDFOS Portugal, S.A.
Rua Calvet de Magalhães, 241
Apartado 1079
P-2770-153 Paço de Arcos
Tel.: +351-21-440 76 00
Telefax: +351-21-440 76 90

Romania
GRUNDFOS Pompe România SRL
Bd. Biruintei, nr 103
Pantelimon county Ilfov
Phone: +40 21 200 4100
Telefax: +40 21 200 4101
E-mail: romania@grundfos.ro

Russia
ООО Грундфос Россия
109544, г. Москва, ул. Школьная, 39-41, стр. 1
Тел. (+7) 495 564-88-00 (495) 737-30-00
Факс (+7) 495 564 88 11
E-mail grundfos.moscow@grundfos.com

Serbia
Grundfos Srbija d.o.o.
Omladinskih brigada 90b
11070 Novi Beograd
Phone: +381 11 2258 740
Telefax: +381 11 2281 769
www.rs.grundfos.com

Singapore
GRUNDFOS (Singapore) Pte. Ltd.
25 Jalan Tukang
Singapore 619264
Phone: +65-6681 9688
Telefax: +65-6681 9689

Slovakia
GRUNDFOS s.r.o.
Prievozská 4D
821 09 BRATISLAVA
Phona: +421 2 5020 1426
sk.grundfos.com

Slovenia
GRUNDFOS LJUBLJANA, d.o.o.
Leskoškova 9e, 1122 Ljubljana
Phone: +386 (0) 1 568 06 10
Telefax: +386 (0)1 568 06 19
E-mail: tehnika-si@grundfos.com

South Africa
GRUNDFOS (PTY) LTD
Corner Mountjoy and George Allen Roads
Wilbart Ext. 2
Bedfordview 2008
Phone: (+27) 11 579 4800
Fax: (+27) 11 455 6066
E-mail: lsmart@grundfos.com

Spain
Bombas GRUNDFOS España S.A.
Camino de la Fuentecilla, s/n
E-28110 Algete (Madrid)
Tel.: +34-91-848 8800
Telefax: +34-91-628 0465

Sweden
GRUNDFOS AB
Box 333 (Lunnagårdsgatan 6)
431 24 Mölndal
Tel.: +46 31 332 23 000
Telefax: +46 31 331 94 60

Switzerland
GRUNDFOS Pumpen AG
Bruggacherstrasse 10
CH-8117 Fällanden/ZH
Tel.: +41-44-806 8111
Telefax: +41-44-806 8115

Taiwan
GRUNDFOS Pumps (Taiwan) Ltd.
7 Floor, 219 Min-Chuan Road
Taichung, Taiwan, R.O.C.
Phone: +886-4-2305 0868
Telefax: +886-4-2305 0878

Thailand
GRUNDFOS (Thailand) Ltd.
92 Chaloem Phrakiat Rama 9 Road,
Dokmai, Pravej, Bangkok 10250
Phone: +66-2-725 8999
Telefax: +66-2-725 8998

Turkey
GRUNDFOS POMPA San. ve Tic. Ltd. Sti.
Gebze Organize Sanayi Bölgesi
Ihsan dede Caddesi,
2. yol 200. Sokak No. 204
41490 Gebze/ Kocaeli
Phone: +90 - 262-679 7979
Telefax: +90 - 262-679 7905
E-mail: satis@grundfos.com

Ukraine
Бізнес Центр Європа
Столичне шосе, 103
м. Київ, 03131, Україна
Телефон: (+38 044) 237 04 00
Факс.: (+38 044) 237 04 01
E-mail: ukraine@grundfos.com

United Arab Emirates
GRUNDFOS Gulf Distribution
P.O. Box 16768
Jebel Ali Free Zone
Dubai
Phone: +971 4 8815 166
Telefax: +971 4 8815 136

United Kingdom
GRUNDFOS Pumps Ltd.
Grovebury Road
Leighton Buzzard/Beds. LU7 4TL
Phone: +44-1525-850000
Telefax: +44-1525-850011

U.S.A.
GRUNDFOS Pumps Corporation
17100 West 118th Terrace
Olathe, Kansas 66061
Phone: +1-913-227-3400
Telefax: +1-913-227-3500

Uzbekistan
Grundfos Tashkent, Uzbekistan The Representative Office of Grundfos Kazakhstan in Uzbekistan
38a, Oybek street, Tashkent
Телефон: (+998) 71 150 3290 / 71 150 3291
Факс: (+998) 71 150 3292

Addresses Revised 01.07.2016

be think innovate

96404999 0516

ECM: 1183385

TP, TPE, TPD, TPED

Series 300, 50/60 Hz

Service instructions

be
think
innovate

GRUNDFOS

CONTENTS

1. Symbols used in this document

DANGER

Indicates a hazardous situation which, if not avoided, will result in death or serious personal injury.

WARNING

Indicates a hazardous situation which, if not avoided, could result in death or serious personal injury.

CAUTION

Indicates a hazardous situation which, if not avoided, could result in minor or moderate personal injury.

The text accompanying the three hazard symbols DANGER, WARNING and CAUTION is structured in the following way:

SIGNAL WORD

Description of hazard

Consequence of ignoring the warning.

- Action to avoid the hazard.

2. Identification

2.1 Nameplate

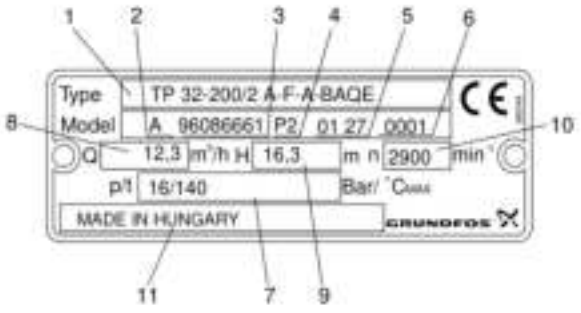

Fig. 1 Example of nameplate

Pos.	Description
1	Type designation
2	Model
3	Product number
4	Place of production
5	Production year and week
6	Serial number
7	Maximum pressure and temperature
8	Rated flow rate
9	Head at rated flow rate
10	Speed
11	Country of production

2.2 Type key

Example	TP	D	65	-550	/2	-A	-F	-A	-BAQE
Type range									
Twin-head pump									
Nominal diameter of suction and discharge flanges (DN)									
Maximum head [dm]									
Number of motor poles									

Pump version
A = Basic version
- Union connection with nut for G 1 1/2 or G 2
- Flange connection to ISO 7005-2, PN 6, PN 10, PN 6/PN 10, PN 16 and PN 25
- Mounting designation: IM 3001 (IM B 5)/IM 3011 (IM V 1)
- The pump housing has tapped holes for mounting the pump on a base plate or bracket.

I = PN 6 flange
X = Used when codes do not fully cover the actual version.
U = NEMA standard

Pipe connection
F = DIN flange
J = JIS flange
G = ANSI flange
R = External thread

Materials
A = Basic version
- Pump housing: grey cast iron EN-GJL-250, DIN W.-Nr. EN-JL1040
- Motor stool: grey cast iron EN-GJL-250, DIN W.-Nr. EN-JL1040
- Pump shaft: stainless steel DIN W.-Nr. 1.4436/DIN W.-Nr. 1.0037
- Impeller: grey cast iron EN-GJL-200, DIN W.-Nr. EN-JL1030

Z = TP Series 100 and 200: bronze pump housing and motor stool
B = TP Series 300: bronze impeller

Shaft seal and plastic/rubber parts, excluding the neck ring
See section *2.2.1 Shaft seal.*

2.2.1 Shaft seal

Mechanical shaft seal with assembly length to EN 12756.

The following variants are available as standard:

Pump	Shaft diameter	Variant code
TP Series 300, flange	∅ 28	BAQE
	∅ 38	BQQE
	∅ 48	GQQE
	∅ 55	
	∅ 60	

2.2.2 Codes for shaft seal

The positions (1) - (4) cover four pieces of information about the shaft seal:

Example	(1)	(2)	(3)	(4)
Grundfos type designation				
Material, rotating seal face				
Material, stationary seat				
Material, secondary seal and other rubber and plastic parts, excluding the neck ring				

The following table explains the positions (1), (2), (3) and (4).

Position	Type	Short description of seal
(1)	A	O-ring seal with fixed driver
	H	Rubber bellows seal
	U	O-ring seal, balanced
	B	Bellows seal, type B, with reduced seal faces
	P	O-ring seal, type A, with reduced seal faces

Position	Type	Material
(2) and (3)	A	Carbon, metal-impregnated (antimony)
	H	Carbon, resin-impregnated
	U	Tungsten carbide
	Q	Silicon carbide

Position	Type	Material
(4)	E	EPDM
	F	FXM
	V	FKM

3. Handling

DANGER

Overhead load

- Death or serious personal injury
- The lifting eyes fitted to large pump motors can be used for lifting the pump head (motor, motor stool and impeller). The lifting eyes must not be used for lifting the entire pump.
  TPD: The centrally positioned thread of the pump housing must not be used for lifting purposed as the thread is placed below the centre of gravity of the pump.

Pumps fitted with motors smaller than 4 kW should be lifted by means of nylon straps. See fig. 1.

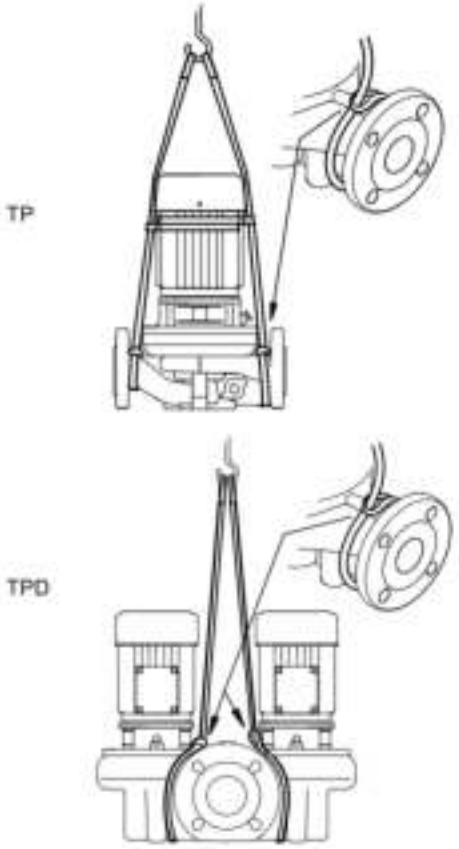

TM02 5500 3302 - TM02 5499 3302

Fig. 1 Lifting the pump by means of nylon straps

Pumps fitted with motors of 4 kW and up should be lifted by means of nylon straps and shackles. See fig. 4.

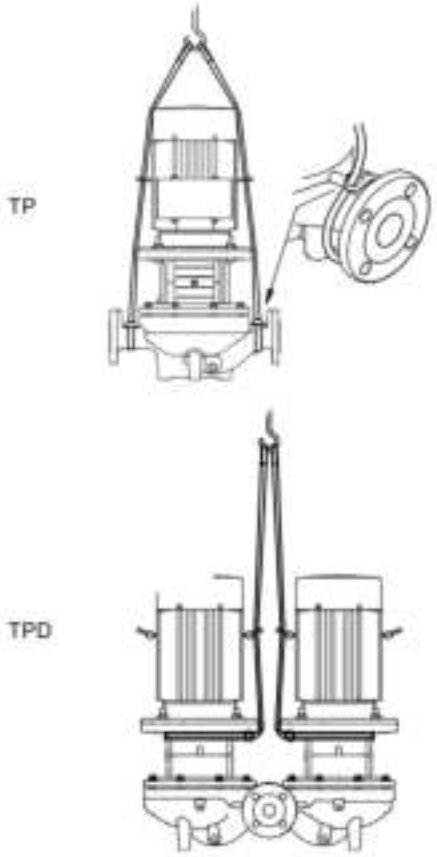

TM02 5502 3302 - TM02 5501 3302

Fig. 2 Lifting the pump by means of nylon straps and shackles

4. Torques and lubricants

Pos.	Designation	Quantity TP/TPD	Dimensions	Torque [Nm]	Lubricant
7a	Screw	4/8	M6	8	Loctite 243
			M5	5	
9	Screw	2/4	M6	8	Loctite 243
			M8	15	
17	Vent screw	1/2	1/8"	8	Loctite 243
18	Pipe plug	2/2	1/4"	20	Loctite 243
19	Pipe plug	1/4	1/8"	10	Loctite 243
20	Pipe plug	2/4	3/8"	25	Loctite 243
26	Staybolt	6, 8, 10/12, 16, 20	M10	45	
36	Nut for pump housing	8, 8, 10/12, 16, 20	M10	45	
			M6	5	
36a	Nut for motor	4/8	M8	12	
			M12	40	
			M16	100	
51	Shaft	1/2			Rocol 22
87	Impeller nut	1/2	M14	40	
72a	O-ring/gasket	1/2			Rocol 22
105	Shaft seal	1/2			Soapy water
211	Screw	0/6	M6	8	
222	Pipe plug	0/1	1/8"	10	Loctite 243

Product	Product number
Loctite 243	V7137215
Rocol 22	00RM2924

5. Service tools

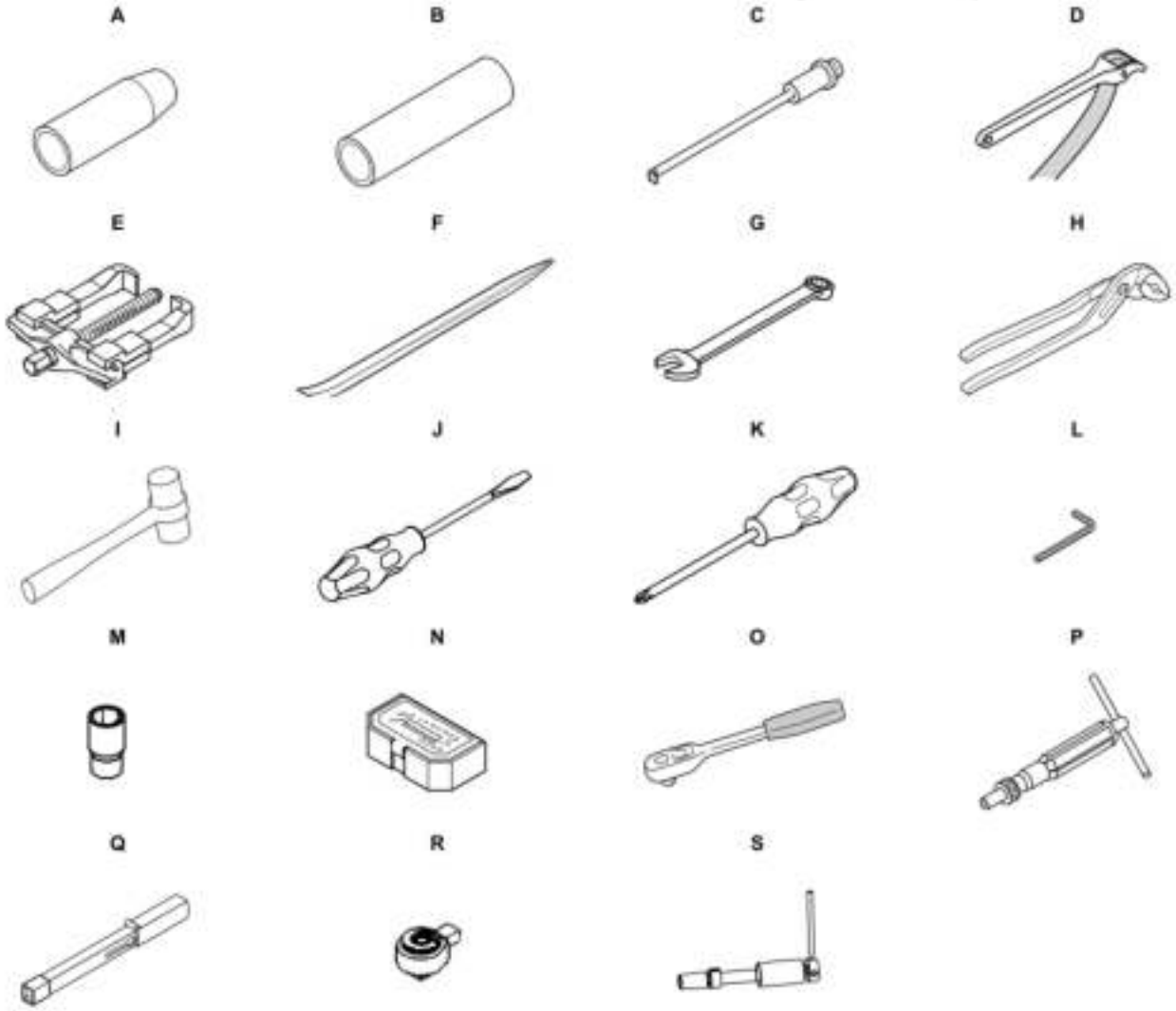

5.1 Special tools

Pos.	Designation	For poss.	Fur	Product number
			Ø 28	V7216304
			Ø 38	V7216305
A	Mounting bush	51	Ø 48	70007165
			Ø 55	70007166
			Ø 60	70007167
			Ø 28	V7216306
			Ø 38	V7216307
B	Punch	105	Ø 48	70007172
			Ø 55	70007173
			Ø 60	70007174
C	Puller	45, 45b		96824962
			Ø 28	95046131
			Ø 38	95046132
S	Tool for shaft seal	105	Ø 48	95046133
			Ø 55	95046134
			Ø 60	95046135

5.2 Standard tools

Pos.	Designation	For pos.	Further information [mm]	Product number
D	Strap wrench	49		00SV0853
E	Puller	49		
F	Pinch bar	51		SV5201
G	Ring/open-end spanner	36, 36a, 67	17	SV0056
			19	SV0063
			22	00SV0186
			24	SV0122
			30	SV0073
			36	
H	Multigrip pliers	11		SV0150
I	Plastic hammer	2, 77		SV0349
J	Screwdriver	105		
K	Cross-recess screwdriver	7a		
L	Hexagon key	9, 9a	2.5	SV0277
			3	
			4	SV0278
			6	SV0196
			10	SV0033
M	Hexagon socket	36, 36a, 67	13	SV0413
			17	SV0417
			19	SV0419
			22	SV0422
			24	SV0424
			27	SV0427
			30	
			36	
			41	
			50	
N	Bits kit	7a, 9, 9a		SV2010
O	Ratchet handle	N		96777072

5.3 Torque tools

Pos.	Designation	For pos.	Further information	Product number
P	Torque screwdriver	N	1-6 Nm	SV0438
Q	Torque wrench	Q	9 x 12 mm - 4-20 Nm	SV2092
			9 x 12 mm - 20-100 Nm	SV0269
			14 x 18 mm - 40-200 Nm	SV0400
R	Ratchet insert tool	M	9 x 12 mm - 1/2"	SV0295
			14 x 18 mm	SV0401

6. Dismantling and assembly

6.1 General Information

Position numbers of parts (digits) refer to drawings and parts lists; position numbers of tools (letters) refer to section *5. Service tools*.

Before dismantling

- Switch off the power supply.
- Close the isolating valves, if fitted, to avoid draining the piping system.
- Disconnect the power supply cable in accordance with local regulations.

Before assembly

- Order the necessary service kits.
- Clean and check all parts.
- Replace defective parts by new parts.

During assembly

- Lubricate and tighten screws and nuts according to section *4. Torques and lubricants*.
- Always replace gaskets and O-rings.

6.2 Dismantling

1. Remove nuts (pos. 36) from pump housing (pos. 6).
2. Remove the pump housing. It may be necessary to use a plastic hammer (pos. I) or a pinch bar (pos. F) for separating the pump housing from motor stool (pos. 1a) or cover (pos. 77).
3. Remove O-ring (pos. 72a) from the motor stool/cover.
4. Hold the impeller with a strap wrench (pos. D) and slacken impeller nut (pos. 67). Remove the impeller nut, spring washer (pos. 66a) and washer (pos. 66) from the shaft.
5. Remove impeller (pos. 49) using a puller.
6. Remove key (pos. 11) from shaft (pos. 51).
7. Remove the spacer rings, if any, between impeller and shaft seal (pos. 105).

Shaft seal, types Bxxx and Dxxx

- Pull off the rotating shaft seal part using two screwdrivers.

Shaft seal, type Axxx

- Pull off the spring retainer using two screwdrivers and remove the seal ring with O-ring using two screwdrivers.

Pump with separate motor stool (pos. 1a) and clamped cover (pos. 77)

- Remove the cover.

P tor stool (pos. 1a) and screw-fixed cover (pos. 77)

- Remove the screws holding cover and motor stool together, and pull off the cover.

Pump with integrated motor stool/cover (pos. 2)

1. Remove coupling guards (pos. 7) and the screws/nuts holding motor stool (pos. 28 and 36a) and motor together. Remove motor stool (pos. 2). It may be necessary to loosen the motor stool from the motor with a plastic hammer.
2. Remove the stationary shaft seal part by pushing it from the back.
3. Slacken screws (pos. 9) fixing pump shaft (pos. 51) on the motor shaft.
4. Remove the pump shaft. It may be necessary to loosen it with a pinch bar or similar tool.

6.3 Replacing the wear rings

Pump with bronze wear rings

1. Insert the hook of puller (pos. C) under wear ring (pos. 45 or 45b).
2. Knock the impact block against the puller end stop. Move the puller to another position under the wear ring.
3. Knock the new wear ring home with a piece of wood as a buffer.
4. Repeat steps 1 to 3 for the second wear ring of the pump.

6.4 Assembly

1. Lubricate the motor shaft with O-ring grease.
2. Push pump shaft (pos. 51) home on the motor shaft. Make sure that the pump shaft does not move when you release it.
3. Apply a drop of Loctite 243 to set screws (pos. 9) and tighten them into the pump shaft. See section *4. Torques and lubricants*.
4. Fit motor stool (pos. 1a or 2) on the motor.
5. Fit and tighten screws/nuts (pos. 28 and 36a) in the motor stool. See section *4. Torques and lubricants*.
6. Fit mounting bush (pos. A) on the pump shaft.

Pump with separate motor stool (pos. 1a) and clamped cover (pos. 77)

- Fit the cover on the motor stool.

Pump with separate motor stool (pos. 1a) and screw-fixed cover (pos. 77)

1. Fit the cover the motor stool and tighten it. See section *4. Torques and lubricants*.
2. Spray soapy water on the pump shaft and the mounting bush.
3. Fit stationary shaft seal part (pos. 105) on the shaft. Do not touch the seal face with your fingers.
4. Press the stationary shaft seal part home with a punch (pos. B).

Shaft seal, all types

1. Spray soapy water on the rotating shaft seal part.
2. Press the rotating shaft seal part home with a punch (pos. B).
3. Fit spacer rings, if required, between shaft seal and impeller on the pump shaft.
4. Remove the mounting bush from the pump shaft.
5. Fit key (pos. 11) and impeller (pos. 49) on the shaft.
6. Fit washer (pos. 66), spring washer (pos. 66a) and impeller nut (pos. 67).
7. Hold the impeller with a strap wrench (pos. D) and tighten the impeller nut. See section *4. Torques and lubricants*.
8. Fit O-ring (pos. 72a) on the cover and lubricate it.
9. Fit pump housing (pos. 6).
10. Fit the cover/motor stool on the pump housing and cross-tighten nuts (pos. 36). See section *4. Torques and lubricants*.
11. Check that the p ely.
12. Fit coupling guards (pos. 7) and tighten the screws. See section *4. Torques and lubricants*.

7. Replacing the valve flap of TPD pumps

Dismantling

1. Remove screws (pos. 211).
2. Remove cover (pos. 210) with gasket (pos. 212).
3. Remove pipe plug (pos. 222).
4. Push out pin (pos. 215).
5. Remove valve (pos. 217).

Assembly

1. Assemble and fit the valve in the pump.
2. Press the assembly pin out using pin (pos. 215).
3. Fit pipe plug (pos. 222).
4. Fit gasket (pos. 212) and valve cover (pos. 210).
5. Fit and tighten screws (pos. 211). See section *4. Torques and lubricants*.

8. Exploded view

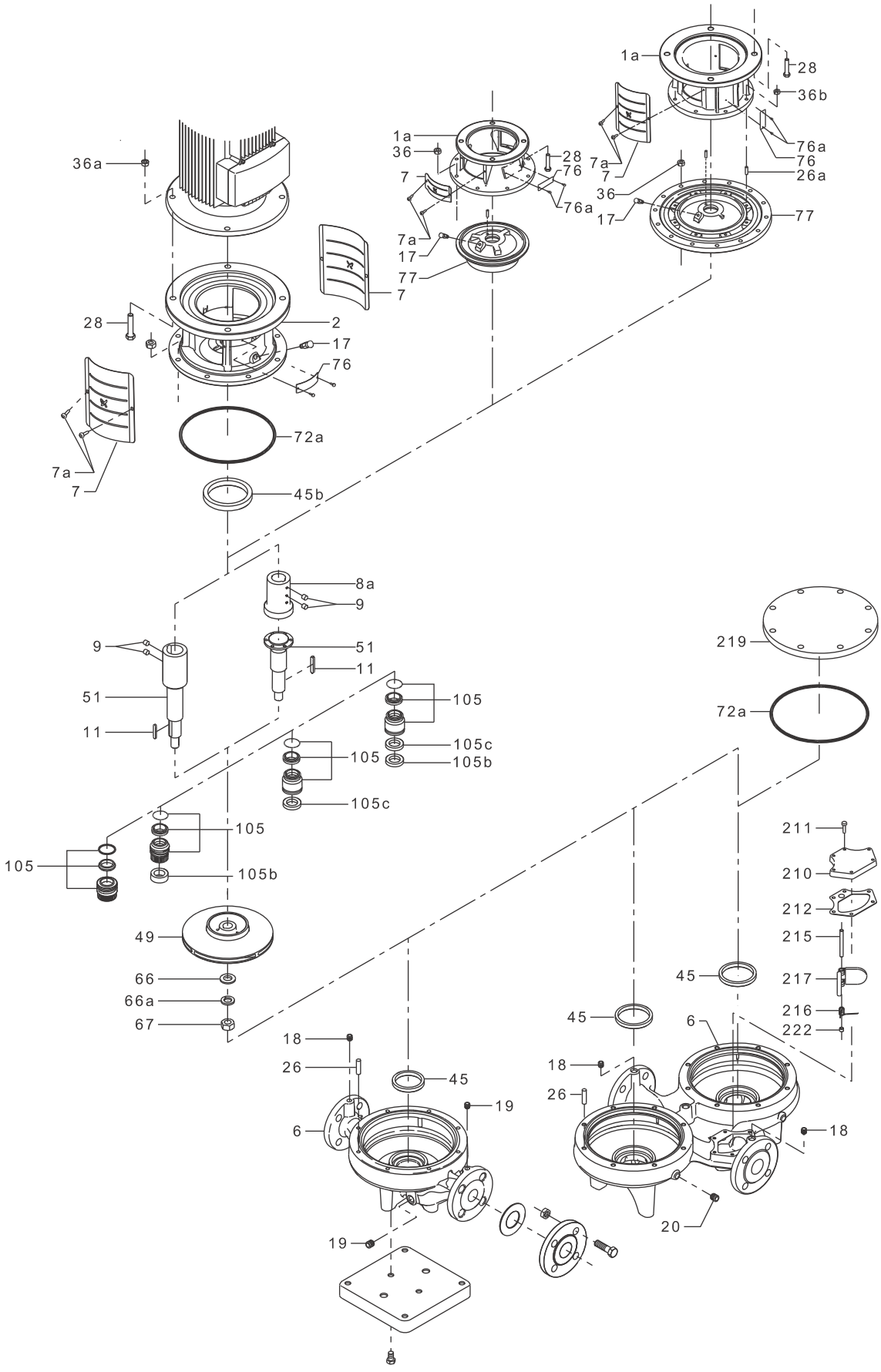

Argentina
Bombas GRUNDFOS de Argentina S.A.
Ruta Panamericana km. 37.500 Centro Industrial Garin
1619 Garín Pcia. de B.A.
Phone: +54-3327 414 444
Telefax: +54-3327 45 3190

Australia
GRUNDFOS Pumps Pty. Ltd.
P.O. Box 2040
Regency Park
South Australia 5942
Phone: +61-8-8461-4611
Telefax: +61-8-8340 0155

Austria
GRUNDFOS Pumpen Vertrieb Ges.m.b.H.
Grundfosstraße 2
A-5082 Grödig/Salzburg
Tel.: +43-6246-883-0
Telefax: +43-6246-883-30

Belgium
N.V. GRUNDFOS Bellux S.A.
Boomsesteenweg 81-83
B-2630 Aartselaar
Tél.: +32-3-870 7300
Télécopie: +32-3-870 7301

Belarus
Представительство ГРУНДФОС в Минске
220125, Минск
ул. Шафарнянская, 11, оф. 56, БЦ «Порт»
Тел.: +375 17 397 397 3
+375 17 397 397 4
Факс: +375 17 397 397 1
E-mail: minsk@grundfos.com

Bosnia and Herzegovina
GRUNDFOS Sarajevo
Zmaja od Bosne 7-7A,
BH-71000 Sarajevo
Phone: +387 33 592 480
Telefax: +387 33 590 465
www.ba.grundfos.com
e-mail: grundfos@bih.net.ba

Brazil
BOMBAS GRUNDFOS DO BRASIL
Av. Humberto de Alencar Castelo Branco, 630
CEP 09850 - 300
São Bernardo do Campo - SP
Phone: +55-11 4393 5533
Telefax: +55-11 4343 5015

Bulgaria
Grundfos Bulgaria EOOD
Slatina District
Iztochna Tangenta street no. 100
BG - 1592 Sofia
Tel. +359 2 49 22 200
Fax. +359 2 49 22 201
email: bulgaria@grundfos.bg

Canada
GRUNDFOS Canada Inc.
2941 Brighton Road
Oakville, Ontario
L6H 6C9
Phone: +1-905 829 9533
Telefax: +1-905 829 9512

China
GRUNDFOS Pumps (Shanghai) Co. Ltd.
10F The Hub, No. 33 Suhong Road
Minhang District
Shanghai 201106
PRC
Phone: +86 21 612 252 22
Telefax: +86 21 612 253 33

COLOMBIA
GRUNDFOS Colombia S.A.S.
Km 1.5 vía Siberia-Cota Conj. Potrero Chico,
Parque Empresarial Arcos de Cota Bod. 1A.
Cota, Cundinamarca
Phone: +57(1)-2913444
Telefax: +57(1)-8764586

Croatia
GRUNDFOS CROATIA d.o.o.
Buzinski prilaz 38, Buzin
HR-10010 Zagreb
Phone: +385 1 6595 400
Telefax: +385 1 6595 499
www.hr.grundfos.com

GRUNDFOS Sales Czechia and Slovakia s.r.o.
Čajkovského 21
779 00 Olomouc
Phone: +420-585-716 111

Denmark
GRUNDFOS DK A/S
Martin Bachs Vej 3
DK-8850 Bjerringbro
Tlf.: +45-87 50 50 50
Telefax: +45-87 50 51 51
E-mail: info_GDK@grundfos.com
www.grundfos.com/DK

Estonia
GRUNDFOS Pumps Eesti OÜ
Peterburi tee 92G
11415 Tallinn
Tel: + 372 606 1690
Fax: + 372 606 1691

Finland
OY GRUNDFOS Pumput AB
Trukkikuja 1
FI-01360 Vantaa
Phone: +358-(0) 207 889 500

France
Pompes GRUNDFOS Distribution S.A.
Parc d'Activités de Chesnes
57, rue de Malacombe
F-38290 St. Quentin Fallavier (Lyon)
Tél.: +33-4 74 82 15 15
Télécopie: +33-4 74 94 10 51

Germany
GRUNDFOS GMBH
Schlüterstr. 33
40699 Erkrath
Tel.: +49-(0) 211 929 69-0
Telefax: +49-(0) 211 929 69-3799
e-mail: infoservice@grundfos.de
Service in Deutschland:
e-mail: kundendienst@grundfos.de

Greece
GRUNDFOS Hellas A.E.B.E.
20th km. Athinon-Markopoulou Av.
P.O. Box 71
GR-19002 Peania
Phone: +0030-210-66 83 400
Telefax: +0030-210-66 46 273

Hong Kong
GRUNDFOS Pumps (Hong Kong) Ltd.
Unit 1, Ground floor
Siu Wai Industrial Centre
29-33 Wing Hong Street &
68 King Lam Street, Cheung Sha Wan
Kowloon
Phone: +852-27861706 / 27861741
Telefax: +852-27858664

Hungary
GRUNDFOS Hungária Kft.
Tópark u. 8
H-2045 Törökbálint,
Phone: +36-23 511 110
Telefax: +36-23 511 111

India
GRUNDFOS Pumps India Private Limited
118 Old Mahabalipuram Road
Thoraipakkam
Chennai 600 096
Phone: +91-44 2496 6800

Indonesia
PT. GRUNDFOS POMPA
Graha Intirub Lt. 2 & 3
Jln. Cililitan Besar No.454. Makasar, Jakarta Timur
ID-Jakarta 13650
Phone: +62 21-469-51900
Telefax: +62 21-460 6910 / 460 6901

Ireland
GRUNDFOS (Ireland) Ltd.
Unit A, Merrywell Business Park
Ballymount Road Lower
Dublin 12
Phone: +353-1-4089 800
Telefax: +353-1-4089 830

Italy
GRUNDFOS Pompe Italia S.r.l.
Via Gran Sasso 4
I-20060 Truccazzano (Milano)
Tel.: +39-02-95838112
Telefax: +39-02-95309290 / 95838461

Japan
GRUNDFOS Pumps K.K.
1-2-3, Shin-Miyakoda, Kita-ku,
Hamamatsu
431-2103 Japan
Phone: +81 53 428 4760
Telefax: +81 53 428 5005

Korea
GRUNDFOS Pumps Korea Ltd.
6th Floor, Aju Building 679-5
Yeoksam-dong, Kangnam-ku, 135-916
Seoul, Korea
Phone: +82-2-5317 600
Telefax: +82-2-5633 725

Latvia
SIA GRUNDFOS Pumps Latvia
Deglava biznesa centrs
Augusta Deglava ielā 60, LV-1035, Rīga,
Tālr.: + 371 714 9640, 7 149 641
Fakss: + 371 914 9646

Lithuania
GRUNDFOS Pumps UAB
Smolensko g. 6
LT-03201 Vilnius
Tel: + 370 52 395 430
Fax: + 370 52 395 431

Malaysia
GRUNDFOS Pumps Sdn. Bhd.
7 Jalan Peguam U1/25
Glenmarie Industrial Park
40150 Shah Alam
Selangor
Phone: +60-3-5569 2922
Telefax: +60-3-5569 2866

Mexico
Bombas GRUNDFOS de México S.A. de C.V.
Boulevard TLC No. 15
Parque Industrial Stiva Aeropuerto
Apodaca, N.L. 66600
Phone: +52-81-8144 4000
Telefax: +52-81-8144 4010

Netherlands
GRUNDFOS Netherlands
Veluwezoom 35
1326 AE Almere
Postbus 22015
1302 CA ALMERE
Tel.: +31-88-478 6336
Telefax: +31-88-478 6332
E-mail: info_gnl@grundfos.com

New Zealand
GRUNDFOS Pumps NZ Ltd.
17 Beatrice Tinsley Crescent
North Harbour Industrial Estate
Albany, Auckland
Phone: +64-9-415 3240
Telefax: +64-9-415 3250

Norway
GRUNDFOS Pumper A/S
Strømsveien 344
Postboks 235, Leirdal
N-1011 Oslo
Tlf.: +47-22 90 47 00
Telefax: +47-22 32 21 50

Poland
GRUNDFOS Pompy Sp. z o.o.
ul. Klonowa 23
Baranowo k. Poznania
PL-62-081 Przeźmierowo
Tel: (+48-61) 650 13 00
Fax: (+48-61) 650 13 50

Portugal
Bombas GRUNDFOS Portugal, S.A.
Rua Calvet de Magalhães, 241
Apartado 1079
P-2770-153 Paço de Arcos
Tel.: +351-21-440 76 00
Telefax: +351-21-440 76 90

Romania
GRUNDFOS Pompe România SRL
Bd. Biruintei, nr 103
Pantelimon county Ilfov
Phone: +40 21 200 4100
Telefax: +40 21 200 4101
E-mail: romania@grundfos.ro

Russia
ООО Грундфос Россия
ул. Школьная, 39-41
Москва, RU-109544, Russia
Тел. (+7) 495 564-88-00 (495) 737-30-00
Факс (+7) 495 564 8811
E-mail grundfos.moscow@grundfos.com

Serbia
Grundfos Srbija d.o.o.
Omladinskih brigada 90b
11070 Novi Beograd
Phone: +381 11 2258 740
Telefax: +381 11 2281 769
www.rs.grundfos.com

Singapore
GRUNDFOS (Singapore) Pte. Ltd.
25 Jalan Tukang
Singapore 619264
Phone: +65-6681 9688
Telefax: +65-6681 9689

Slovakia
GRUNDFOS s.r.o.
Prievozská 4D
821 09 BRATISLAVA
Phona: +421 2 5020 1426
sk.grundfos.com

Slovenia
GRUNDFOS LJUBLJANA, d.o.o.
Leskoškova 9e, 1122 Ljubljana
Phone: +386 (0) 1 568 06 10
Telefax: +386 (0)1 568 06 19
E-mail: tehnika-si@grundfos.com

South Africa
Grundfos (PTY) Ltd.
16 Lascelles Drive, Meadowbrook Estate
1609 Germiston, Johannesburg
Tel.: (+27) 10 248 6000
Fax: (+27) 10 248 6002
E-mail: lgradidge@grundfos.com

Spain
Bombas GRUNDFOS España S.A.
Camino de la Fuentecilla, s/n
E-28110 Algete (Madrid)
Tel.: +34-91-848 8800
Telefax: +34-91-628 0465

Sweden
GRUNDFOS AB
Box 333 (Lunnagårdsgatan 6)
431 24 Mölndal
Tel.: +46 31 332 23 000
Telefax: +46 31 331 94 60

Switzerland
GRUNDFOS Pumpen AG
Bruggacherstrasse 10
CH-8117 Fällanden/ZH
Tel.: +41-44-806 8111
Telefax: +41-44-806 8115

Taiwan
GRUNDFOS Pumps (Taiwan) Ltd.
7 Floor, 219 Min-Chuan Road
Taichung, Taiwan, R.O.C.
Phone: +886-4-2305 0868
Telefax: +886-4-2305 0878

Thailand
GRUNDFOS (Thailand) Ltd.
92 Chaloem Phrakiat Rama 9 Road,
Dokmai, Pravej, Bangkok 10250
Phone: +66-2-725 8999
Telefax: +66-2-725 8998

Turkey
GRUNDFOS POMPA San. ve Tic. Ltd. Sti.
Gebze Organize Sanayi Bölgesi
Ihsan dede Caddesi,
2. yol 200. Sokak No. 204
41490 Gebze/ Kocaeli
Phone: +90 - 262-679 7979
Telefax: +90 - 262-679 7905
E-mail: satis@grundfos.com

Ukraine
Бізнес Центр Європа
Столичне шосе, 103
м. Київ, 03131, Україна
Телефон: (+38 044) 237 04 00
Факс.: (+38 044) 237 04 01
E-mail: ukraine@grundfos.com

United Arab Emirates
GRUNDFOS Gulf Distribution
P.O. Box 16768
Jebel Ali Free Zone
Dubai
Phone: +971 4 8815 166
Telefax: +971 4 8815 136

United Kingdom
GRUNDFOS Pumps Ltd.
Grovebury Road
Leighton Buzzard/Beds. LU7 4TL
Phone: +44-1525-850000
Telefax: +44-1525-850011

U.S.A.
GRUNDFOS Pumps Corporation
9300 Loiret Blvd.
Lenexa, Kansas 66219
Phone: +1-913-227-3400
Telefax: +1-913-227-3500

Uzbekistan
Grundfos Tashkent, Uzbekistan The Representative Office of Grundfos Kazakhstan in Uzbekistan
38a, Oybek street, Tashkent
Телефон: (+998) 71 150 3290 / 71 150 3291
Факс: (+998) 71 150 3292

Addresses Revised 31.03.2020

be think innovate

99457680 05.2020
ECM: 1287723

TP, TPD, TPE, TPED, TPE2, TPE2 D, TPE3, TPE3 D

In-line circulator pumps

50 Hz

be
think
innovate

GRUNDFOS

Table of contents

1. Pump data

Introduction

TP pumps are designed for applications such as:

- district heating systems
- heating systems
- air-conditioning systems
- district cooling systems
- water supply
- industrial processes
- industrial cooling.

The pumps are available with either mains-operated motors (TP and TPD) or electronically speed-controlled motors (TPE, TPED, TPE2, TPE2 D, TPE3, TPE3 D).

The pumps are all single-stage, in-line centrifugal pumps with mechanical shaft seal. The pumps are of the close-coupled type, that is the pump and the motor are separate units.

TP, mains-operated pumps

The TP range is divided into three groups based on their construction: TP Series 100, 200 and 300.

TP Series 100 with union or flange connection

Rp 1 (DN 25) to Rp 1 1/4 (DN 32) and motor sizes from 0.12 to 0.25 kW.

For further information, see page 28.

TP Series 200 with flange connection

DN 32 to DN 100 and motor sizes from 0.12 to 2.2 kW.

For further information, see page 28.

TP Series 300 with flange connection

We offer two versions:

- 16-bar version with DN 32 to DN 350 flanges and motor sizes from 0.25 to 315 kW
- 25-bar version with DN 100 to DN 400 flanges and motor sizes from 5 to 630 kW.

For further information, see page 30.

TPE, TPE2 and TPE3 speed-controlled pumps

We offer the following speed-controlled pumps which are based on the construction and choice of material of the TP pumps:

- TPE Series 1000 pumps
  without factory-fitted differential-pressure sensor.
- TPE Series 2000 pumps
  with factory-fitted differential-pressure sensor.
- TPE2 pumps
  without built-in differential-pressure sensor and temperature sensor.
- TPE3 pumps
  with built-in differential-pressure sensor and temperature sensor.

All pumps with 2-pole motors up to 11 kW and 4-pole motors up to 7.5 kW are fitted with Grundfos permanent-magnet MGE motors with motor efficiency class IE5 according to IEC 60034-30-2.

TPE Series 1000 pumps

The motors have a built-in frequency converter.

Via an external signal from a sensor or a controller, the pumps allow for any configuration and control method required, that is constant pressure, temperature or flow.

For further information, see page 33.

TPE Series 2000 pumps

The pumps have a factory-fitted differential-pressure sensor.

The pumps are factory-set to proportional-pressure control.

The motors have a built-in frequency converter for continuous adjustment of the pressure to the flow rate.

The range is recognised as a preset solution for quick and safe installation. Pumps fitted with 2-pole motors below 15 kW and 4-pole motors below 11 kW have a colour display for easy and intuitive pump setup and with full access to all functions.

TM05 8893 2813

Fig. 1 Example of main display on a TPE Series 2000 with advanced control panel

For further information, see page 36.

TPE2 pumps

The permanent-magnet motors have a built-in frequency converter and the hydraulic components have been specially designed for optimum efficiency.

Via an external signal from a sensor or a controller, the pumps allow for any configuration and control method required, that is constant pressure, temperature, flow or level. For further information, see page 40.

TPE3 pumps

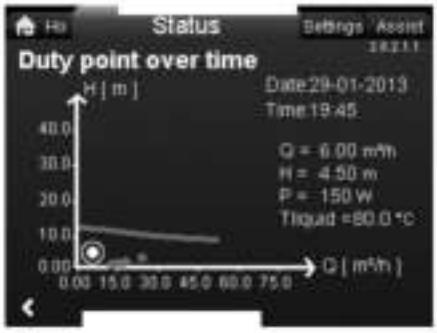

Fig. 2 Example of status display for TPE3 pumps

The pumps have a built-in differential-pressure sensor and temperature sensor.

The pumps are factory-set to $AUTO_{ADAPT}$ control.

The permanent-magnet motors of the pumps have a built-in frequency converter for continuous adjustment of the pressure to the flow rate. The hydraulic components have been specially designed for optimum efficiency.

The range is recognised as a preset solution for quick and safe installation. The pumps have a colour display for easy and intuitive pump setup and with full access to all functions. The pumps incorporate the following advanced functions:

- $AUTO_{ADAPT}$
- $FLOW_{ADAPT}$
- automatic night setback
- $FLOW_{LIMIT}$
- heat energy monitor
- flow rate estimation
- proportional pressure
- constant pressure
- constant differential temperature control
- constant temperature control.

For further information, see page 44.

Why select a TPE pump

A pump with electronic speed control offers these benefits:

- energy savings
- increased comfort
- control and monitoring of pump performance
- communication with the pump.

ATEX-approved TP pumps

On request, Grundfos offers TP and TPD pumps with ATEX-approval.

See *30. Key application data* on page 280.

High-efficiency motors, IE3 and IE4

TP pumps are fitted with high-efficiency motors.

The pumps are primarily fitted with motors that meet the legislative requirements of the EuP IE3 grade.

The pumps are also available with motors from 2.2 to 132 kW that meet the legislative requirements of the EuP IE4 grade. For further information, see *Motors* on pages 129 to 134.

Energy-optimised pumps

TP pumps are energy-optimised and comply with the EuP Directive (Commission Regulation (EC) No 547/2012) in which most pumps are classified or graduated in an energy efficiency index, MEI. See also page 250.

TP pump delivered with a separate frequency converter

On request, it is possible to get a TP pump delivered with a separate CUE or Danfoss frequency converter. The pump will be tested and setup together with the frequency converter at the factory.

Possible sizes: 30-55 kW 2-pole and 22-55 kW 4-pole.

Identification

Type key for TP, TPD, TPE, TPED

Code	Example: TP E D 65 -120 /2 S -A -F -A -BQQE -G D B
	Pump range
	Electronically speed-controlled pump, Series 1000, 2000
	Twin-head pump
	Nominal diameter of inlet and outlet ports, DN
	Maximum head [dm]
	Pole number
	Code for pump with sensor version:
[Blank]	TPE Series 1000 with MGE motor and without sensor
S	TPE Series 2000 with factory-fitted differential-pressure sensor
NC	TPE Series 1000 with integrated CUE
SC	TPE Series 2000 with built-in sensor with integrated CUE
	Code for pump version. The codes may be combined:
A	Basic version
A3	PN 25 flange
B	Oversize motor
E	With ATEX approval, certificate or test report, the second character of the code for pump version is an E
I	PN 6 flange
X	Special version
	Code for pipe connection:
F	DIN flange
O	Union
	Code for materials:
A	Basic version
I	Stainless steel 1.4308 pump housing and motor stool
Z	Bronze pump housing and motor stool
B	Bronze impeller
S	Stainless steel 1.4408 impeller
O	Ductile cast-iron pump housing with cast-iron impeller
Y	Ductile cast-iron pump housing with bronze impeller
Q	Ductile cast-iron pump housing with stainless steel 1.4408 impeller
	Code for shaft seal including other plastic and rubber pump parts, except the neck ring. See *Codes for shaft seal* on page 8.
	Code for rated motor power [kW]. See *Codes for rated motor power* on page 8
	Code for phase and voltage [V]. See *Codes for phase and voltage* on page 8.
	Code for speed variant [rpm]. See *Codes for speed variant* on page 8.

Type key for TPE2, TPE3

Code	Example: TPE3 D 65 -120 S -A -F -A -BQQE -F A B
	Pump range, electronically speed-controlled pump
TPE2	Without built-in sensor
TPE3	Built-in differential-pressure and temperature sensor
	Twin-head pump
	Nominal diameter of inlet and outlet ports, DN
	Maximum head [dm]
S	Built-in differential-pressure and temperature sensor
N	Without built-in sensor
	Code for pump version:
A	Basic version
I	PN 6 flange
X	Special version
	Code for pipe connections:
F	DIN flange
	Code for materials:
A	Basic version
I	Stainless steel 1.4308 pump housing and motor stool
	Code for shaft seal including other plastic and rubber pump parts, except the neck ring. See *Codes for shaft seal* on page 8
	Code for rated motor power [kW]. See *Codes for rated motor power* on page 8.
	Code for phase and voltage [V]. See *Codes for phase and voltage* on page 8
	Code for speed variant [rpm]. See *Codes for speed variant* on page 8.

Codes for shaft seal

Code	Example	B	Q	Q	E
	Grundfos type designation				
A	O-ring seal with fixed seal driver				
B	Rubber bellows seal				
D	O-ring seal, balanced				
G	Bellows seal with reduced seal faces				
R	O-ring seal with reduced seal faces				
	Material of rotating face				
A	Carbon, antimony-impregnated				
B	Carbon, resin-impregnated				
Q	Silicon carbide				
	Material of stationary seat				
B	Carbon, resin-impregnated				
Q	Silicon carbide				
U	Tungsten carbide				
	Material of secondary seal				
E	EPDM				
P	NBR rubber				
V	FKM				
F	FXM				

Codes for rated motor power

Code	Description
A	0.12 kW
B	0.18 kW
C	0.25 kW
D	0.37 kW
E	0.55 kW
F	0.75 kW
G	1.1 kW
H	1.5 kW
I	2.2 kW
J	3.0 kW
K	4.0 kW
L	5.5 kW
M	7.5 kW
N	11 kW
O	15 kW
P	18.5 kW
Q	22 kW
R	30 kW
S	37 kW
T	45 kW
U	55 kW
V	75 kW
W	90 kW
1	110 kW
2	132 kW
3	160 kW
4	200 kW
5	250 kW
6	315 kW
7	355 kW
8	400 kW
9	500 kW
X	No motor or motors are not defined above

Codes for phase and voltage

Code	Description
A	1 x 200-240 V
B	3 x 200-240 V
C	3 x 440-480 V
D	3 x 380-500 V
X	Not defined or no motor

Codes for speed variant

Code	Description
A	1450-2000 RPM
B	2900-4000 RPM
C	4000-5900 RPM
1	2-pole, 50 Hz
2	2-pole, 60 Hz
3	4-pole, 50 Hz
4	4-pole, 60 Hz
5	6-pole, 50 Hz

2. Performance range

Performance range, TPE2, TPE3, PN 6, 10, 16

See page 168 for performance curves.

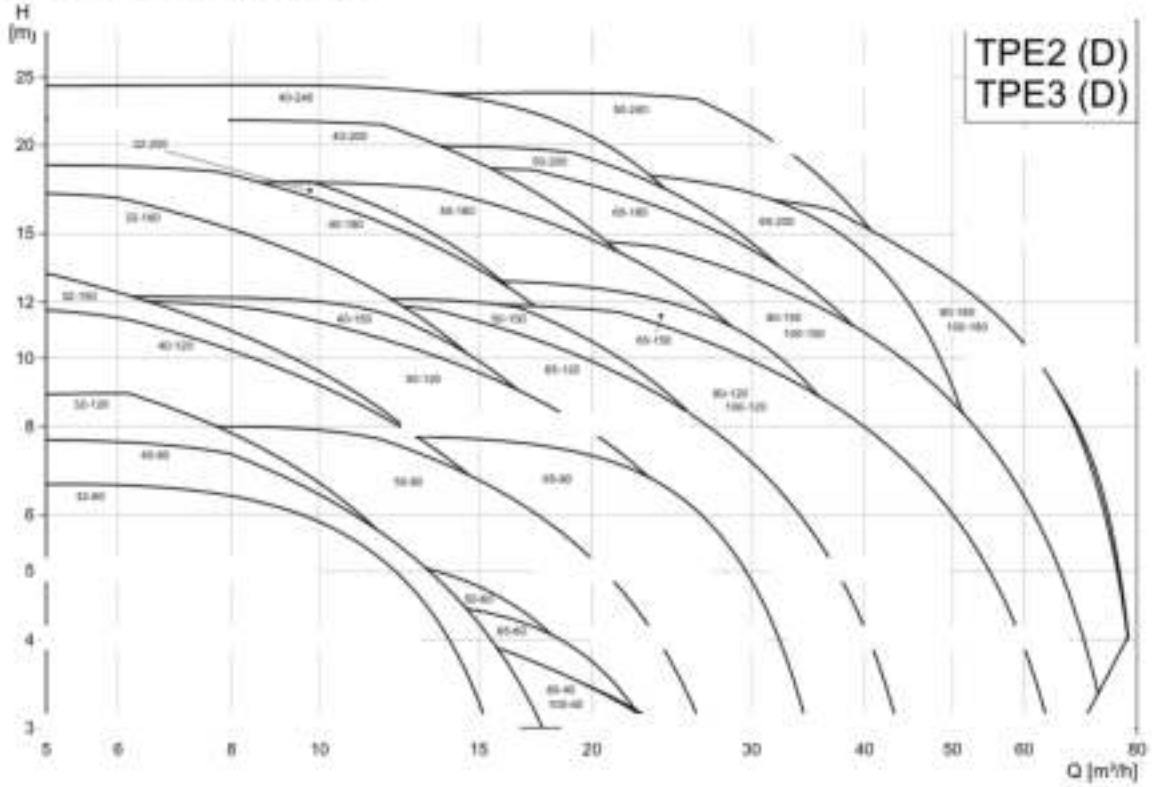

Performance range, TPE2 D, TPE3 D, twin-head operation, PN 6, 10, 16

See page 168 for performance curves.

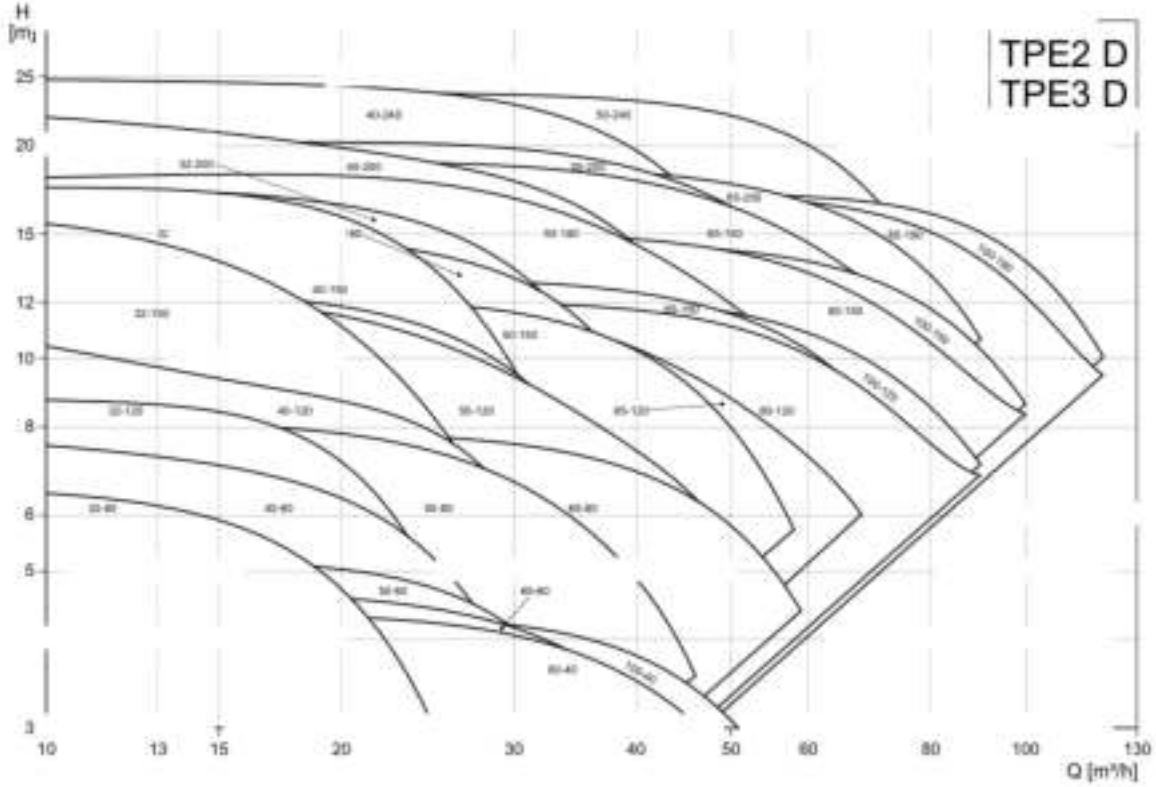

Performance range, 2-pole, PN 6, 10, 16

See page 180 for performance curves.

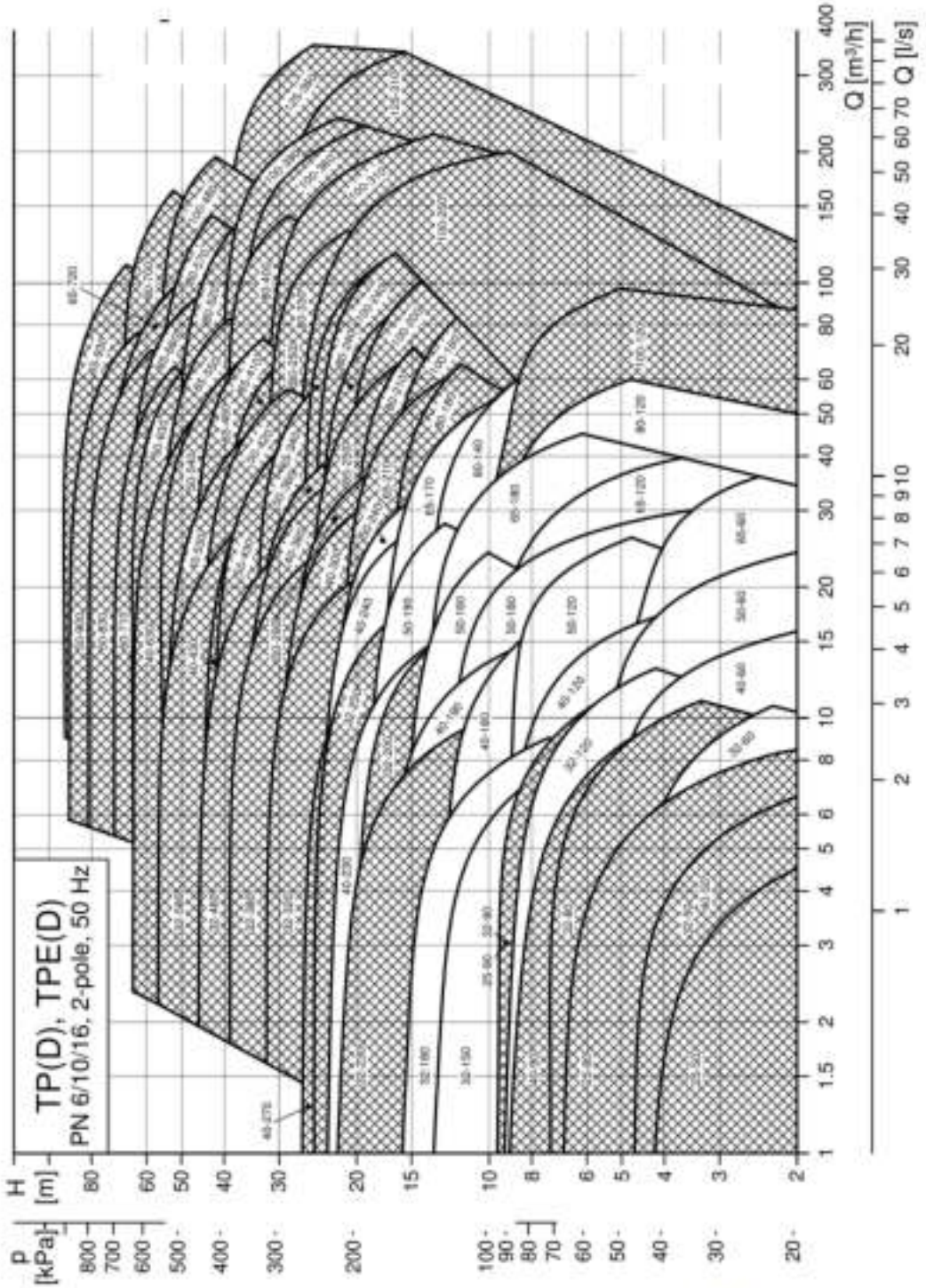

Note: All QH curves apply to single-head pumps. For further information about curve conditions, see page 167.
The hatched area shows the performance range of TPE pumps.

Performance range, 2-pole, PN 25

See page 204 for performance curves.

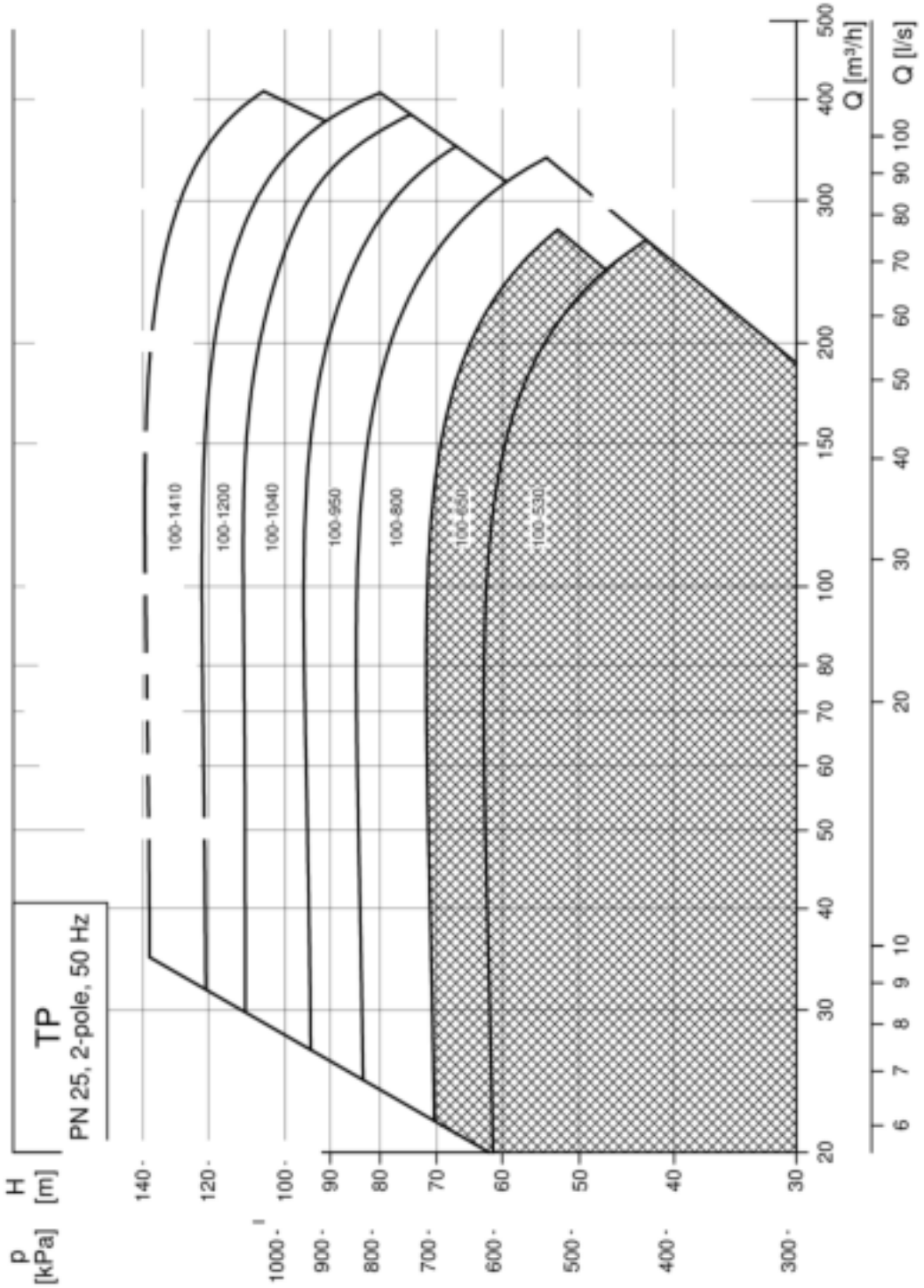

Note: All QH curves apply to single-head pumps. For further information about curve conditions, see page 167.

Performance range, 4-pole, PN 6, 10, 16

See page 208 for performance curves.

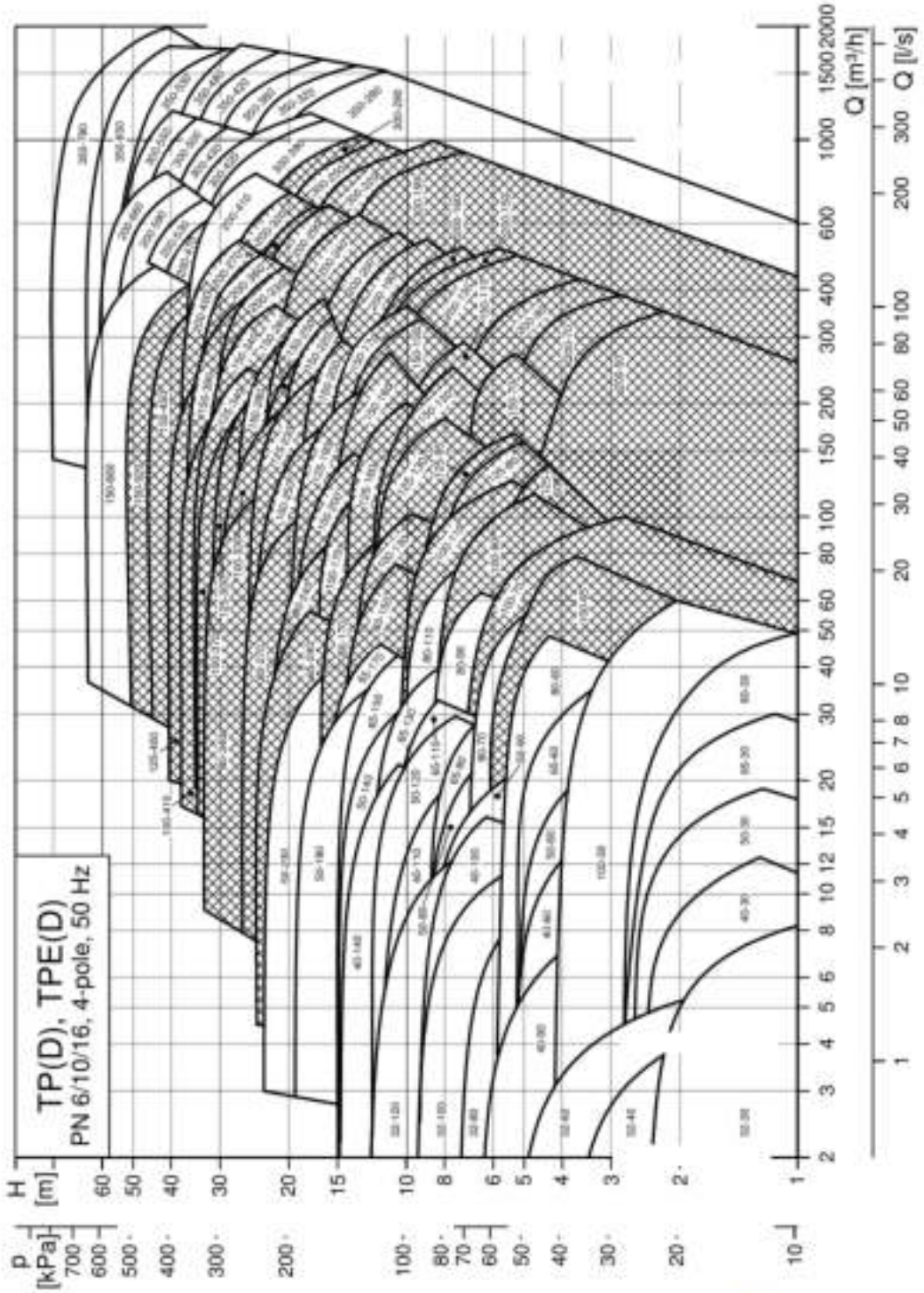

Note: All QH curves apply to single-head pumps. For further information about curve conditions, see page 167.
The hatched area shows the performance range of TPE pumps.

Performance range, 4-pole, PN 25

See page 208 for performance curves.

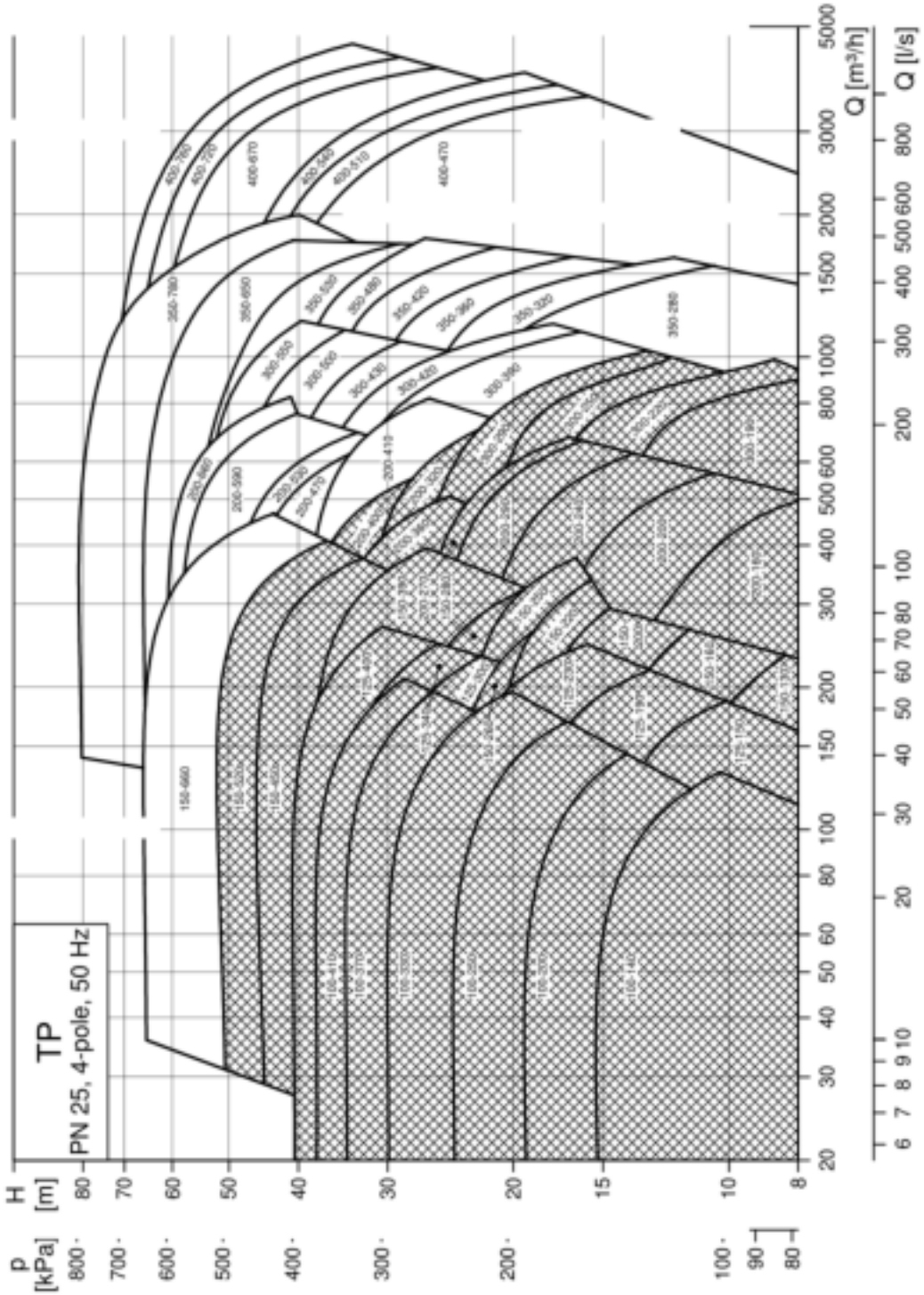

Note: All QH curves apply to single-head pumps. For further information about curve conditions, see page 167.

Performance range, 6-pole, PN 16

See page 246 for performance curves.

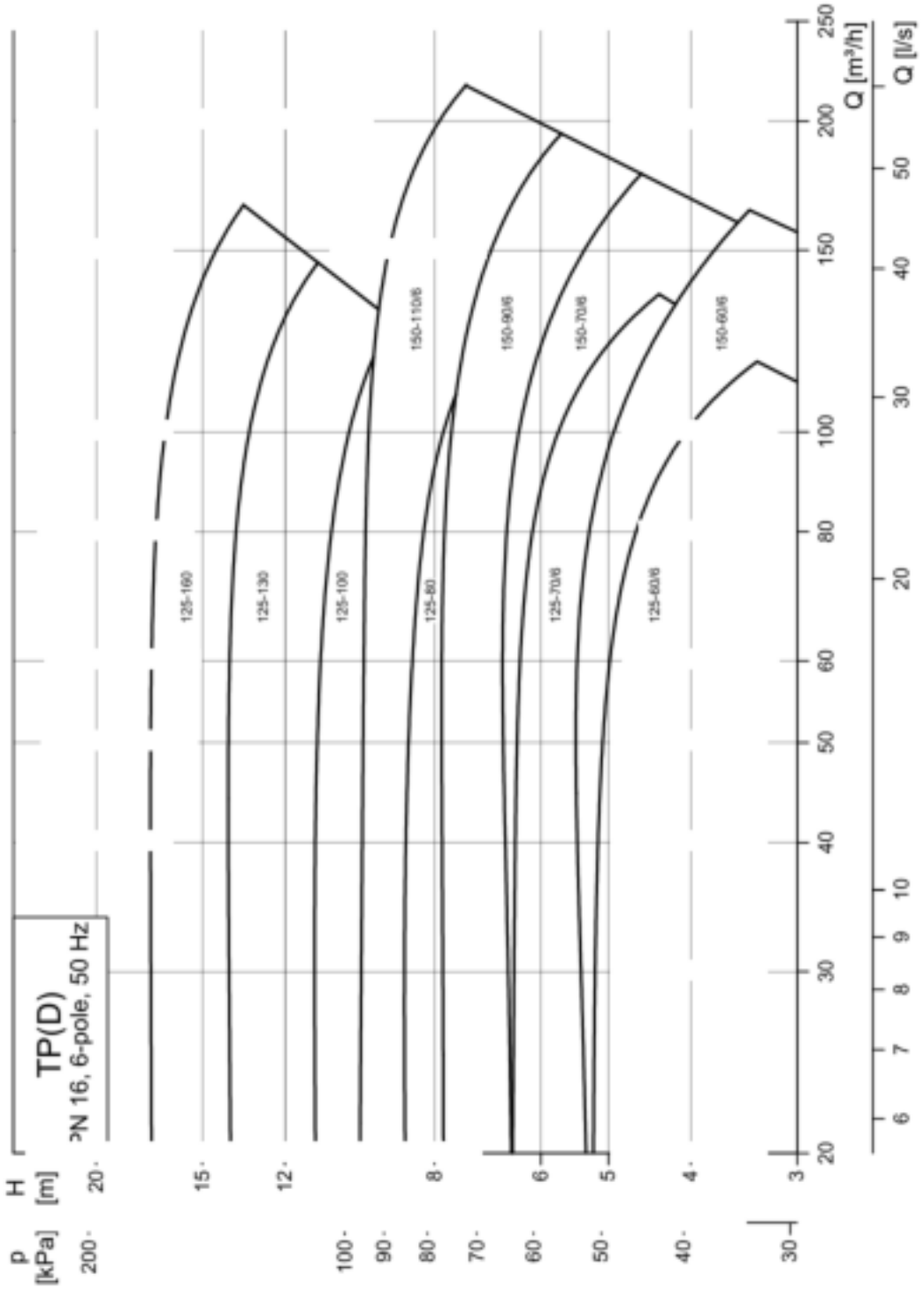

Note: All QH curves apply to single-head pumps. For further information about curve conditions, see page 167.

3. Product range

Product range, TPE2, TPE2 D, TPE3, TPE3 D

Pump type	Design		Shaft seal				Pressure stage				Materials			Electronically speed-controlled motor	
											Pump housing		Impeller	Voltage [V]	
	TPE2, TPE2 D	TPE3, TPE3 D	BQBE	BAQE	BQQE	DBUE	PN 6/10	PN 6	PN 10	PN 16	Cast iron EN-GJL-250	Stainless steel[1]	Composite PES-GF30	1 x 200-240 V P2 [kW]	3 x 380-500 V P2 [kW]
TPE2, TPE2 D, TPE3 TPE3 D 32-80	•	•	•		•		•			•	•	•	•	0.25	0.25
TPE2, TPE2 D, TPE3 TPE3 D 32-120	•	•	•		•		•			•	•	•	•	0.25	0.25
TPE2, TPE2 D, TPE3 TPE3 D 32-150	•	•	•		•		•			•	•	•	•	0.37	0.37
TPE2, TPE2 D, TPE3 TPE3 D 32-180	•	•	•		•		•			•	•	•	•	0.55	0.55
TPE2, TPE2 D, TPE3 TPE3 D 32-200	•	•	•		•		•			•	•	•	•	0.75	0.75
TPE2, TPE2 D, TPE3 TPE3 D 40-80	•	•	•		•		•			•	•	•	•	0.25	0.25
TPE2, TPE2 D, TPE3 TPE3 D 40-120	•	•	•		•		•			•	•	•	•	0.37	0.37
TPE2, TPE2 D, TPE3 TPE3 D 40-150	•	•	•		•		•			•	•	•	•	0.55	0.55
TPE2, TPE2 D, TPE3 TPE3 D 40-180	•	•	•		•		•			•	•	•	•	0.75	0.75
TPE2, TPE2 D, TPE3 TPE3 D 40-200	•	•	•		•		•			•	•	•	•	1.1	1.1
TPE2, TPE2 D, TPE3 TPE3 D 40-240	•	•	•		•		•			•	•	•	•	1.5	1.5
TPE2, TPE2 D, TPE3 TPE3 D 50-60	•	•	•		•		•			•	•	•	•	0.37	0.37
TPE2, TPE2 D, TPE3 TPE3 D 50-80	•	•	•		•		•			•	•	•	•	0.37	0.37
TPE2, TPE2 D, TPE3 TPE3 D 50-120	•	•	•		•		•			•	•	•	•	0.55	0.55
TPE2, TPE2 D, TPE3 TPE3 D 50-150	•	•	•		•		•			•	•	•	•	0.75	0.75
TPE2, TPE2 D, TPE3 TPE3 D 50-180	•	•	•		•		•			•	•	•	•	1.1	1.1
TPE2, TPE2 D, TPE3 TPE3 D 50-200	•	•	•		•		•			•	•	•	•	1.5	1.5
TPE2, TPE2 D, TPE3 TPE3 D 50-240	•	•	•		•		•			•	•	•	•		2.2
TPE2, TPE2 D, TPE3 TPE3 D 65-60	•	•	•		•		•			•	•	•	•	0.37	0.37
TPE2, TPE2 D, TPE3 TPE3 D 65-80	•	•	•		•		•			•	•	•	•	0.55	0.55
TPE2, TPE2 D, TPE3 TPE3 D 65-120	•	•	•		•		•			•	•	•	•	0.75	0.75
TPE2, TPE2 D, TPE3 TPE3 D 65-150	•	•	•		•		•			•	•	•	•	1.1	1.1
TPE2, TPE2 D, TPE3 TPE3 D 65-180	•	•	•		•		•			•	•	•	•	1.5	1.5
TPE2, TPE2 D, TPE3 TPE3 D 65-200	•	•	•		•		•			•	•	•	•		2.2
TPE2, TPE2 D, TPE3 TPE3 D 80-40	•	•	•		•			•	•	•	•		-	0.25	0.25
TPE2, TPE2 D, TPE3 TPE3 D 80-120	•	•	•		•			•	•	•	•		•	1.1	1.1
TPE2, TPE2 D, TPE3 TPE3 D 80-150	•	•	•		•			•	•	•	•		-	1.5	1.5
TPE2, TPE2 D, TPE3 TPE3 D 80-180	•	•	•		•			•	•	•	•		-		2.2
TPE2, TPE2 D, TPE3 TPE3 D 100-40	•	•	•		•			•	•	•	•		•	0.25	0.25
TPE2, TPE2 D, TPE3 TPE3 D100-120	•	•	•		•			•	•	•	•		-	1.1	1.1
TPE2, TPE2 D, TPE3, TPE3 D 100-150	•	•	•		•			•	•	•	•		-	1.5	1.5
TPE2, TPE2 D, TPE3, TPE3 D 100-180	-	-	-		-			-	•	•	•		-		[illegible]

[1] Stainless-steel versions are only available as single-head pumps and with a combined PN 6/10/16 flange.

Product range, 2-pole, PN 6, 10, 16, 25

Pump type	TPE Series 1000	TPE Series 2000	Design: TP Series 100	Design: TP Series 200	Design: TP Series 300	Shaft seal: BQBE	Shaft seal: BAQE	Shaft seal: BQQE	Shaft seal: DQQE	Shaft seal: DAQF	Pressure stage: PN 6	Pressure stage: PN 10	Pressure stage: PN 16	Pressure stage: PN 25	Materials, Pump housing: Cast iron EN-GJL-150	Materials, Pump housing: Cast iron EN-GJL-200	Materials, Pump housing: Cast iron EN-GJL-250	Materials, Pump housing: Nodular cast iron EN-GJS-400-18-LT	Materials, Pump housing: Bronze[1]	Materials, Pump housing: Stainless steel	Materials, Impeller: Stainless steel	Materials, Impeller: Cast iron	Materials, Impeller: Composite	Materials, Impeller: Bronze	Mains-operated motor, Voltage [V]: 1 x 220-230 ΔV/ 240 YV P2 [kW]	Mains-operated motor, Voltage [V]: 3 x 220-240 ΔV/ 380-415 YV P2 [kW]	Mains-operated motor, Voltage [V]: 3 x 380-415 ΔV/ 660-690 YV[2] P2 [kW]	Electronically speed-controlled motor, Voltage [V]: 1 x 200-240 V P2 [kW]	Electronically speed-controlled motor, Voltage [V]: 3 x 380-480 V P2 [kW]	Electronically speed-controlled motor, Voltage [V]: 3 x 380-420 V P2 [kW]
TP 25-50/2	•		•			•		•				•			•					•			•		0.12	0.12		0.12		
TP 25-80/2	•		•			•		•				•			•					•			•		0.18	0.18		0.18		
TP 25-90/2	•		•			•		•				•				•							•		0.37	0.37		0.37		
TP 32-50/2	•		•			•		•				•			•					•			•		0.12	0.12		0.12		
TP 32-80/2	•		•			•		•				•			•					•			•		0.25	0.25		0.25		
TP 32-90/2	•		•			•		•				•				•				•			•		0.37	0.37		0.37		
TP, TPD 32-60/2				•		•		•			•	•					•		•		•				0.25	0.25				
TP, TPD 32-120/2				•		•		•			•	•					•		•		•				0.37	0.37				
TP, TPD 32-150/2				•		•		•			•	•					•		•		•				0.37	0.37				
TP, TPD 32-180/2				•		•		•			•	•					•		•		•				0.55	0.55				
TP, TPD 32-230/2	•	•		•		•		•			•	•					•		•		•				0.75	0.75		0.75	0.75	
TP, TPD 32-200/2	•	•			•		•	•					•				•					•		•	1.1	1.1		1.1	1.1	
TP, TPD 32-250/2	•	•			•		•	•					•				•					•		•	1.5	1.5		1.5	1.5	
TP, TPD 32-320/2	•	•			•		•	•					•				•					•		•		2.2	2.2		2.2	
TP, TPD 32-380/2	•	•			•		•	•					•				•					•		•		3.0	3.0		3.0	
TP, TPD 32-460/2	•	•			•		•	•					•				•					•		•		4.0	4.0		4.0	
TP, TPD 32-580/2	•	•			•		•	•					•				•					•		•		5.5	5.5		5.5	
TP 40-50/2	•		•			•		•			•	•				•				•			•		0.12	0.12		0.12		
TP, TPD 40-60/2				•		•		•			•	•					•		•		•				0.25	0.25				
TP 40-80/2	•		•			•		•			•	•				•				•			•		0.25	0.25		0.25		
TP 40-90/2	•		•			•		•			•	•				•							•		0.37	0.37		0.37		
TP, TPD 40-120/2				•		•		•			•	•					•		•		•				0.37	0.37				
TP 40-180/2				•		•		•			•	•					•		•		•				0.55	0.55				
TP, TPD 40-190/2				•		•		•					•				•		•		•				0.75	0.75				
TP, TPD 40-230/2				•		•		•					•				•		•		•				1.1	1.1				
TP, TPD 40-270/2	•	•		•		•		•					•				•		•		•				1.5	1.5		1.5	1.5	
TP, TPD 40-240/2					•		•	•					•				•					•		•		2.2	2.2			
TP, TPD 40-300/2	•	•			•		•	•					•				•					•		•		3.0	3.0		3.0	
TP, TPD 40-360/2	•	•			•		•	•					•				•					•		•		4.0	4.0		4.0	
TP, TPD 40-430/2	•	•			•		•	•					•				•					•		•		5.5	5.5		5.5	
TP, TPD 40-530/2	•	•			•		•	•					•				•					•		•		7.5	7.5		7.5	
TP, TPD 40-630/2	•	•			•		•	•					•				•					•		•		11.0	11.0		11.0	
TP, TPD 50-60/2				•		•		•			•	•					•		•		•				0.37	0.37				
TP, TPD 50-120/2				•		•		•			•	•					•		•		•				0.75	0.75				
TP, TPD 50-180/2				•		•		•			•	•					•		•		•				0.75	0.75				
TP, TPD 50-160/2					•		•	•					•				•					•		•	1.1	1.1				
TP, TPD 50-190/2					•		•	•					•				•					•		•	1.5	1.5				
TP, TPD 50-240/2					•		•	•					•				•					•		•		2.2	2.2			
TP, TPD 50-290/2	•	•			•		•	•					•				•					•		•		3.0	3.0		3.0	
TP, TPD 50-360/2	•	•			•		•	•					•				•					•		•		4.0	4.0		4.0	
TP, TPD 50-430/2	•	•			•		•	•					•				•					•		•		5.5	5.5		5.5	
TP, TPD 50-420/2	•	•			•		•	•					•				•					•		•		7.5	7.5		7.5	
TP, TPD 50-540/2	•	•			•		•	•					•				•					•		•		11.0	11.0		11.0	
TP, TPD 50-630/2	•	•			•		•	•					•				•					•		•		15.0	15.0		15.0	
TP, TPD 50-710/2	•	•			•		•	•					•				•					•		•		15.0	15.0		15.0	
TP, TPD 50-830/2	•	•			•		•	•					•				•					•		•		18.5	18.5		18.5	
TP, TPD 50-900/2	•	•			•		•	•					•				•					•		•		22.0	22.0		22.0	
TP, TPD 65-60/2				•		•		•			•	•					•		•		•				0.55	0.55				
TP, TPD 65-120/2				•		•		•			•	•					•		•		•				1.1	1.1				
TP, TPD 65-180/2				•		•		•			•	•					•		•		•				1.5	1.5				
TP, TPD 65-170/2					•		•	•					•				•					•		•		2.2	2.2			
TP, TPD 65-210/2	•	•			•		•	•					•				•					•		•		3.0	3.0		3.0	
TP, TPD 65-250/2	•	•			•		•	•					•				•					•		•		4.0	4.0		4.0	
TP, TPD 65-340/2	•	•			•		•	•					•				•					•		•		5.5	5.5		5.5	
TP, TPD 65-410/2	•	•			•		•	•					•				•					•		•		7.5	7.5		7.5	
TP, TPD 65-460/2	•	•			•		•	•					•				•					•		•		11.0	11.0		11.0	
TP, TPD 65-550/2	•	•			•		•	•					•				•					•		•		15.0	15.0		15.0	

Pump type	TPE Series 1000	TPE Series 2000	Design			Shaft seal					Pressure stage				Materials											Mains-operated motor			Electronically speed-controlled motor		
															Pump housing							Impeller				Voltage [V]			Voltage [V]		
			TP Series 100	TP Series 200	TP Series 300	BQBE	BAQE	BQQE	DQQE	DAQF	PN 6	PN 10	PN 16	PN 25	Cast iron EN-GJL-150	Cast iron EN-GJL-200	Cast iron EN-GJL-250	Nodular cast iron EN-GJS-400-18-LT	Bronze[1]	Stainless steel	Stainless steel	Cast iron	Composite	Bronze	1 x 220-230 ΔV/ 240 YV	3 x 220-240 ΔV/ 380-415 YV	3 x 380-415 ΔV/ 660-690 YV[2]	1 x 200-240 V	3 x 380-480 V	3 x 380-420 V
																									P2 [kW]	P2 [kW]	P2 [kW]	P2 [kW]	P2 [kW]	P2 [kW]
TP, TPD 65-660/2	•	•			•		•	•					•				•					•		•		18.5	18.5		18.5	
TP, TPD 65-720/2	•	•			•		•	•					•				•					•		•		22.0	22.0		22.0	
TP, TPD 65-930/2	•	•			•		•	•					•				•					•		•		30.0	30.0			30.0
TP, TPD 80-120/2				•		•		•			•	•					•		•		•				1.5	1.5				
TP, TPD 80-140/2					•		•	•					•				•					•		•		2.2	2.2			
TP, TPD 80-180/2	•	•			•		•	•					•				•					•		•		3.0	3.0		3.0	
TP, TPD 80-210/2	•	•			•		•	•					•				•					•		•		4.0	4.0		4.0	
TP, TPD 80-240/2	•	•			•		•	•					•				•					•		•		5.5	5.5		5.5	
TP, TPD 80-250/2	•	•			•		•	•					•				•					•		•		7.5	7.5		7.5	
TP, TPD 80-330/2	•	•			•		•	•					•				•					•		•		11.0	11.0		11.0	
TP, TPD 80-400/2	•	•			•		•	•					•				•					•		•		15.0	15.0		15.0	
TP, TPD 80-520/2	•	•			•		•	•					•				•					•		•		18.5	18.5		18.5	
TP, TPD 80-570/2	•	•			•		•	•					•				•					•		•		22.0	22.0		22.0	
TP, TPD 80-700/2	•	•			•		•	•					•				•					•		•		30.0	30.0			30.0
TP, TPD 100-120/2	•	•		•		•		•			•	•					•		•		•					2.2	2.2		2.2	
TP, TPD 100-160/2	•	•			•		•	•					•				•					•		•		4.0	4.0		4.0	
TP, TPD 100-200/2	•	•			•		•	•					•				•					•		•		5.5	5.5		5.5	
TP, TPD 100-240/2	•	•			•		•	•					•				•					•		•		7.5	7.5		7.5	
TP, TPD 100-250/2	•	•			•		•	•					•				•					•		•		11.0	11.0		11.0	
TP, TPD 100-310/2	•	•			•		•	•					•				•					•		•		15.0	15.0		15.0	
TP, TPD 100-360/2	•	•			•		•	•					•				•					•		•		18.5	18.5		18.5	
TP, TPD 100-390/2	•	•			•		•	•					•				•					•		•		22.0	22.0		22.0	
TP, TPD 100-480/2	•	•			•		•	•					•				•					•		•		30.0	30.0			30.0
TP 100-530/2	•	•			•				•	•				•				•				•		•			45.0			45.0
TP 100-650/2	•	•			•				•	•				•				•				•		•			55.0			55.0
TP 100-800/2					•				•	•				•				•				•		•			75.0			
TP 100-950/2					•				•	•				•				•				•		•			90.0			
TP 100-1040/2					•				•	•				•				•				•		•			110.0			
TP 100-1200/2					•				•	•				•				•				•		•			132.0			
TP 100-1410/2					•				•	•				•				•				•		•			160.0			
TP 125-310/2	•	•			•		•	•					•				•					•		•		22.0	22.0		22.0	
TP 125-360/2	•	•			•		•	•					•				•					•		•		30.0	30.0			30.0

• Standard.

1) Bronze versions are only available as single-head pumps.

2) 2-pole motors above 5.5 kW can be operated at 3 x 660-690 YV. Smaller [illegible] operated at 3 x 660-690 YV.

Product range, 4-pole, PN 6, 10, 16, 25

Pump type	TPE Series 1000	TPE Series 2000	Design: TP Series 100	Design: TP Series 200	Design: TP Series 300	Shaft seal: BQBE	Shaft seal: BAQE	Shaft seal: BQQE	Shaft seal: DBUE	Shaft seal: DQQE	Shaft seal: DAQF	Pressure stage: PN 6	Pressure stage: PN 10	Pressure stage: PN 16	Pressure stage: PN 25	Materials, Pump housing: Cast iron EN-GJL-250	Materials, Pump housing: Nodular cast iron EN-GJS-400-18-LT	Materials, Pump housing: Bronze[1]	Materials, Impeller: Stainless steel	Materials, Impeller: Cast iron	Materials, Impeller: Nodular cast iron EN-GJS-400-15	Materials, Impeller: Bronze	Mains-operated motor, Voltage [V]: 1 x 220-230 ΔV/ 240 YV P2 [kW]	Mains-operated motor, Voltage [V]: 3 x 220-240 ΔV/ 380-415 YV P2 [kW]	Mains-operated motor, Voltage [V]: 3 x 380-415 ΔV/ 660-690 YV[2] P2 [kW]	Electronically speed-controlled motor, Voltage [V]: 1 x 200-240 V P2 [kW]	Electronically speed-controlled motor, Voltage [V]: 3 x 380-480 V P2 [kW]	Electronically speed-controlled motor, Voltage [V]: 3 x 380-420 V P2 [kW]
TP, TPD 32-30/4				•		•		•				•	•			•		•	•				0.12	0.12				
TP, TPD 32-40/4				•		•		•				•	•			•		•	•				0.25	0.25				
TP, TPD 32-60/4				•		•		•				•	•			•		•	•				0.25	0.25				
TP, TPD 32-80/4					•		•	•						•		•				•		•	0.25	0.25				
TP, TPD 32-100/4					•		•	•						•		•				•		•	0.37	0.37				
TP, TPD 32-120/4					•		•	•						•		•				•		•	0.55	0.55				
TP, TPD 40-30/4				•		•		•				•	•			•		•	•				0.12	0.12				
TP 40-60/4				•		•		•				•	•			•		•	•				0.25	0.25				
TP, TPD 40-90/4				•		•		•						•		•		•	•				0.25	0.25				
TP, TPD 40-100/4					•		•	•						•		•				•		•	0.55	0.55				
TP, TPD 40-110/4					•		•	•						•		•				•		•	0.75	0.75				
TP, TPD 40-140/4					•		•	•						•		•				•		•	1.1	1.1				
TP, TPD 50-30/4				•		•		•				•	•			•		•	•				0.25	0.25				
TP, TPD 50-60/4				•		•		•				•	•			•		•	•				0.37	0.37				
TP, TPD 50-90/4					•		•	•						•		•				•		•	0.55	0.55				
TP, TPD 50-80/4					•		•	•						•		•				•		•	0.75	0.75				
TP, TPD 50-120/4					•		•	•						•		•				•		•	1.1	1.1				
TP, TPD 50-140/4					•		•	•						•		•				•		•	1.5	1.5				
TP, TPD 50-190/4					•		•	•						•		•				•		•		2.2	2.2			
TP, TPD 50-230/4					•		•	•						•		•				•		•		3.0	3.0			
TP, TPD 65-30/4				•		•		•				•	•			•		•	•				0.25	0.25				
TP, TPD 65-60/4				•		•		•				•	•			•		•	•				0.55	0.55				
TP, TPD 65-90/4					•		•	•						•		•				•		•	0.75	0.75				
TP, TPD 65-110/4					•		•	•						•		•				•		•	1.1	1.1				
TP, TPD 65-130/4					•		•	•						•		•				•		•	1.5	1.5				
TP, TPD 65-150/4					•		•	•						•		•				•		•		2.2	2.2			
TP, TPD 65-170/4					•		•	•						•		•				•		•		3.0	3.0			
TP, TPD 65-240/4	•	•			•		•	•						•		•				•		•		4.0	4.0		4.0	
TP, TPD 80-30/4				•		•		•				•	•			•		•	•				0.37	0.37				
TP, TPD 80-60/4				•		•		•				•	•			•		•	•				0.75	0.75				
TP, TPD 80-70/4					•		•	•						•		•				•		•	1.1	1.1				
TP, TPD 80-90/4					•		•	•						•		•				•		•	1.5	1.5				
TP, TPD 80-110/4					•		•	•						•		•				•		•		2.2	2.2			
TP, TPD 80-150/4	•	•			•		•	•						•		•				•		•		3.0	3.0		3.0	
TP, TPD 80-170/4	•	•			•		•	•						•		•				•		•		4.0	4.0		4.0	
TP, TPD 80-240/4	•	•			•		•	•						•		•				•		•		5.5	5.5		5.5	
TP, TPD 80-270/4	•	•			•		•	•						•		•				•		•		7.5	7.5		7.5	
TP, TPD 80-340/4	•	•			•		•	•						•		•				•		•		11.0	11.0		11.0	
TP, TPD 100-30/4				•		•		•				•	•			•		•	•				0.55	0.55				
TP, TPD 100-65/4	•	•			•		•	•						•		•				•		•	1.1	1.1			1.1	
TP, TPD 100-70/4	•	•			•		•	•						•		•				•		•	1.5	1.5			1.5	
TP, TPD 100-90/4	•	•			•		•	•						•		•				•		•		2.2	2.2		2.2	
TP, TPD 100-110/4	•	•			•		•	•						•		•				•		•		3.0	3.0		3.0	
TP, TPD 100-130/4	•	•			•		•	•						•		•				•		•		4.0	4.0		4.0	
TP, TPD 100-170/4	•	•			•		•	•						•		•				•		•		5.5	5.5		5.5	
TP 100-140/4	•				•					•	•				•		•			•		•		5.5	5.5		5.5	
TP, TPD 100-200/4	•	•			•		•	•		•	•			•	•	•	•			•		•		7.5	7.5		7.5	
TP, TPD 100-250/4	•	•			•		•	•		•	•			•	•	•	•			•		•		11.0	11.0		11.0	
TP, TPD 100-330/4	•	•			•		•	•		•	•			•	•	•	•			•		•		15.0	15.0		15.0	
TP, TPD 100-370/4	•	•			•		•	•		•	•			•	•	•	•			•		•		18.5	18.5		18.5	
TP, TPD 100-410/4	•	•			•		•	•		•	•			•	•	•	•			•		•		22.0	22.0			22.0
TP 125-60/4	•	•			•		•	•						•		•				•		•		2.2	2.2		2.2	
TP 125-80/4	•	•			•		•	•						•		•				•		•		3.0	3.0		3.0	
TP 125-95/4	•	•			•		•	•						•		•				•		•		4.0	4.0		4.0	
TP, TPD 125-110/4	•	•			•		•	•						•		•				•		•		4.0	4.0		4.0	
TP, TPD 125-130/4	•	•			•		•	•						•		•				•		•		5.5	5.5		5.5	
TP, TPD 125-160/4	•	•			•		•	•						•		•				•		•		7.5	7.5		7.5	

Pump type	TPE Series 1000	TPE Series 2000	Design			Shaft seal						Pressure stage				Materials								Mains-operated motor			Electronically speed-controlled motor		
																Pump housing			Impeller					Voltage [V]			Voltage [V]		
			TP Series 100	TP Series 200	TP Series 300	BQBE	BAQE	BQQE	DBUE	DQQE	DAQF	PN 6	PN 10	PN 16	PN 25	Cast iron EN-GJL-250	Nodular cast iron EN-GJS-400-18-LT	Bronze[1]	Stainless steel	Cast iron	Nodular cast iron EN-GJS-400-15	Bronze	1 x 220-230 ΔV/ 240 YV P2 [kW]	3 x 220-240 ΔV/ 380-415 YV P2 [kW]	3 x 380-415 ΔV/ 660-690 YV[2] P2 [kW]	1 x 200-240 V P2 [kW]	3 x 380-480 V P2 [kW]	3 x 380-420 V P2 [kW]
TP 125-150/4	•				•					•	•				•		•			•		•		7.5	7.5		7.5	
TP, TPD 125-190/4	•	•			•		•	•		•	•			•	•	•	•			•		•		11.0	11.0		11.0	
TP, TPD 125-230/4	•	•			•		•	•		•	•			•	•	•	•			•		•		15.0	15.0		15.0	
TP, TPD 125-300/4	•	•			•		•	•		•	•			•	•	•	•			•		•		18.5	18.5		18.5	
TP, TPD 125-340/4	•	•			•		•	•		•	•			•	•	•	•			•		•		22.0	22.0			22.0
TP, TPD 125-400/4	•	•			•		•	•		•	•			•	•	•	•			•		•		30.0	30.0			30.0
TP 150-70/4	•	•			•		•	•						•		•				•		•		5.5	5.5		5.5	
TP 150-110/4	•	•			•		•	•						•		•				•		•		7.5	7.5		7.5	
TP 150-155/4	•	•			•		•	•						•		•				•		•		11.0	11.0		11.0	
TP 150-170/4	•	•			•		•	•						•		•				•		•		15.0	15.0		15.0	
TP, TPD 150-130/4	•	•			•		•	•		•	•			•	•	•	•			•		•		7.5	7.5		7.5	
TP, TPD 150-160/4	•	•			•		•	•		•	•			•	•	•	•			•		•		11.0	11.0		11.0	
TP, TPD 150-200/4	•	•			•		•	•		•	•			•	•	•	•			•		•		15.0	15.0		15.0	
TP, TPD 150-220/4	•	•			•		•	•		•	•			•	•	•	•			•		•		18.5	18.5		18.5	
TP, TPD 150-250/4	•	•			•		•	•		•	•			•	•	•	•			•		•		22.0	22.0			22.0
TP 150-260/4	•	•			•		•	•		•	•			•	•	•	•			•		•		18.5	18.5		18.5	
TP 150-280/4	•	•			•		•	•		•	•			•	•	•	•			•		•		22.0	22.0			22.0
TP 150-340/4	•	•			•		•	•		•	•			•	•	•	•			•		•		30.0	30.0			30.0
TP 150-390/4	•	•			•		•	•		•	•			•	•	•	•			•		•			37.0			37.0
TP 150-450/4	•	•			•		•	•		•	•			•	•	•	•			•		•		45.0	45.0			45.0
TP 150-520/4	•	•			•		•	•		•	•			•	•	•	•			•		•		55.0	55.0			55.0
TP 150-660/4					•		•	•		•	•			•	•	•	•			•		•		75.0	75.0			
TP 200-50/4	•	•			•		•	•						•		•				•		•		4.0	4.0		4.0	
TP 200-70/4	•	•			•		•	•						•		•				•		•		5.5	5.5		5.5	
TP 200-90/4	•	•			•		•	•						•		•				•		•		7.5	7.5		7.5	
TP 200-130/4	•	•			•		•	•						•		•				•		•		11.0	11.0		11.0	
TP 200-150/4	•	•			•		•	•						•		•				•		•		15.0	15.0		15.0	
TP 200-160/4	•	•			•		•	•		•	•			•	•	•	•			•		•		15.0	15.0		15.0	
TP 200-190/4	•	•			•		•	•		•	•			•	•	•	•			•		•		18.5	18.5		18.5	
TP 200-200/4	•	•			•		•	•		•	•			•	•	•	•			•		•		22.0	22.0			22.0
TP 200-240/4	•	•			•		•	•		•	•			•	•	•	•			•		•		30.0	30.0			30.0
TP 200-270/4	•	•			•		•	•		•	•			•	•	•	•			•		•			45.0			37.0
TP 200-290/4	•	•			•		•	•		•	•			•	•	•	•			•		•			37.0			37.0
TP 200-320/4	•	•			•		•	•		•	•			•	•	•	•			•		•			55.0			55.0
TP 200-330/4	•	•			•		•	•		•	•			•	•	•	•			•		•			37.0			37.0
TP 200-360/4	•	•			•		•	•		•	•			•	•	•	•			•		•			45.0			45.0
TP 200-400/4	•	•			•		•	•		•	•			•	•	•	•			•		•			55.0			55.0
TP 200-410/4					•		•	•		•	•			•	•	•	•			•		•			75.0			
TP 200-470/4					•		•	•		•	•			•	•	•	•			•		•			75.0			
TP 200-530/4					•		•	•		•	•			•	•	•	•			•		•			90.0			
TP 200-590/4					•		•	•		•	•			•	•	•	•			•		•			110			
TP 200-660/4					•		•	•		•	•			•	•	•	•			•		•			132			
TP 300-190/4	•	•			•		•	•		•	•			•	•	•	•			•		•		30.0	30.0			30.0
TP 300-220/4	•	•			•		•	•		•	•			•	•	•	•			•		•			37.0			37.0
TP 300-250/4	•	•			•		•	•		•	•			•	•	•	•			•		•			45.0			45.0
TP 300-290/4	•	•			•		•	•		•	•			•	•	•	•			•		•			55.0			55.0
TP 300-390/4					•		•	•		•	•			•	•	•	•			•		•			75.0			
TP 300-420/4					•		•	•		•	•			•	•	•	•			•		•			90.0			
TP 300-430/4					•		•	•		•	•			•	•	•	•			•		•			110.0			
TP 300-500/4					•		•	•		•	•			•	•	•	•			•		•			132.0			
TP 300-550/4					•		•	•		•	•			•	•	•	•			•		•			160.0			
TP 350-280/4					•		•	•		•	•			•	•	•	•			•		•			75.0			
TP 350-320/4					•		•	•		•	•			•	•	•	•			•		•			90.0			
TP 350-360/4					•		•	•		•	•			•	•	•	•			•		•			110.0			
TP 350-420/4					•		•	•		•	•			•	•	•	•			•		•			132.0			
TP 350-480/4					•		•	•		•	•			•	•	•	•			•		•			160.0			
TP 350-530/4					•		•	•		•	•			•	•	•	•			•		•			200.0			
TP 350-650/4					•		•	•		•	•			•	•	•	•			•		•			250.0			
TP 350-780/4					•		•	•		•	•			•	•	•	•			•		•			315.0			

Pump type	TPE Series 1000	TPE Series 2000	Design			Shaft seal						Pressure stage				Materials								Mains-operated motor			Electronically speed-controlled motor		
																Pump housing			Impeller					Voltage [V]			Voltage [V]		
			TP Series 100	TP Series 200	TP Series 300	BQBE	BAQE	BQQE	DBUE	DQQE	DAQF	PN 6	PN 10	PN 16	PN 25	Cast iron EN-GJL-250	Nodular cast iron EN-GJS-400-18-LT	Bronze[1]	Stainless steel	Cast iron	Nodular cast iron EN-GJS-400-15	Bronze	1 x 220-230 ΔV/ 240 YV	3 x 220-240 ΔV/ 380-415 YV	3 x 380-415 ΔV/ 660-690 YV[2]	1 x 200-240 V	3 x 380-480 V	3 x 380-420 V
																							P2 [kW]	P2 [kW]	P2 [kW]	P2 [kW]	P2 [kW]	P2 [kW]
TP 400-470/4					•				•						•		•				•	•			315.0			
TP 400-510/4					•				•						•		•				•	•			355.0			
TP 400-540/4					•				•						•		•				•	•			400.0			
TP 400-670/4					•				•						•		•				•	•			500.0			
TP 400-720/4					•				•						•		•				•	•			560.0			
TP 400-760/4					•				•						•		•				•	•			630.0			

• Standard.

1) Bronze versions are only available as single-head pumps.

2) 4-pole motors above 4 kW can be operated at 3 x 660-690 YV. Smaller motor sizes cannot be operated at 3 x 660-690 YV.

Product range, 6-pole, PN 16

Pump type	TPE Series 1000	TPE Series 2000	Design			Shaft seal						Pressure stage				Materials								Mains-operated motor			Electronically speed-controlled motor		
																Pump housing			Impeller					Voltage [V]			Voltage [V]		
			TP Series 100	TP Series 200	TP Series 300	BQBE	BAQE	BQQE	DBUE	DQQE	DAQF	PN 6	PN 10	PN 16	PN 25	Cast iron EN-GJL-250	Nodular cast iron EN-GJS-400-18	Bronze[1]	Stainless steel	Cast iron	Nodular cast iron EN-GJS-400-15	Bronze	1 x 220-230 ΔV/ 240 YV	3 x 220-240 ΔV/ 380-415 YV	3 x 380-415 ΔV/ 660-690 YV	1 x 200-240 V	3 x 380-480 V	3 x 380-420 V
																							P2 [kW]	P2 [kW]	P2 [kW]	P2 [kW]	P2 [kW]	P2 [kW]
TP, TPD 125-60/6					•		•	•						•		•				•		•		1.5				
TP, TPD 125-70/6					•		•	•						•		•				•		•		2.2	2.2			
TP, TPD 125-80/6					•		•	•						•		•				•		•		3.0	3.0			
TP, TPD 125-100/6					•		•	•						•		•				•		•		4.0	4.0			
TP, TPD 125-130/6					•		•	•						•		•				•		•		5.5	5.5			
TP, TPD 125-160/6					•		•	•						•		•				•		•		7.5	7.5			
TP, TPD 150-60/6					•		•	•						•		•				•		•		2.2	2.2			
TP, TPD 150-70/6					•		•	•						•		•				•		•		3.0	3.0			
TP, TPD 150-90/6					•		•	•						•		•				•		•		4.0	4.0			
TP, TPD 150-110/6					•		•	•						•		•				•		•		5.5	5.5			

• Standard.

1) Bronze versions are only available as single-head pumps.

4. Operating conditions

System and test pressures

Pressure	System pressure		Test pressure	
	[bar]	[MPa]	[bar]	[MPa]
PN 6	6	0.6	10	1.0
PN 10	10	1.0	16	1.6
PN 16	16	1.6	24	2.4
PN 25	25	2.5	38	3.8

Sound pressure level

Single-phase: Maximum 70 dB(A).

Three-phase: See table below.

Motor [kW]	Maximum sound pressure level [dB(A)] - ISO 3743		
	Three-phase motors		
	2-pole	4-pole	6-pole
0.12			
0.18	-		
0.25	56	41	
0.37	56	45	
0.55	57	42	
0.75	53	59.5	
1.1	53	49.5	
1.5	58	50	41
2.2	60	51	52
3.0	59.5	53	63
4.0	63	54	63
5.5	62	50	63
7.5	60	51	66
11.0	60	53	
15.0	60	54	
18.5	60.5	60	
22.0	65.5	60	
30.0	70	62	
37.0	71	66	
45.0	67	66	
55.0	72	67	
75.0	74	70	
90.0	73	70	
110.0	76	70	
132.0	76	70	
160.0	76	70	
200.0		70	
250.0		73	
315.0		73	
355.0		75	
400.0		75	
500.0		75	
560.0		78	
630.0		78	

The values apply only to MG and Siemens motors.

The values have a tolerance of 3 dB according to EN ISO 4871. The tolerance is not added to the values in the table.

The audible noise from TP pumps is primarily noise from the motor fan. The selection of TPE pumps will reduce the noise at partial load, as the motor and, consequently, the motor fan run at a lower speed. Possible flow noise from control valves is also reduced at partial load in the case of the TPE, TPE2, and TPE3 pumps.

Ambient temperature

MG IE3 motors: 0.75 - 22 kW motors, 2-pole 0.75 - 15 kW motors, 4-pole	-20 to +60 °C
Siemens IE3 motors: 30-90 kW motors, 2-pole 18.5 - 90 kW motors, 4-pole	-20 to +55 °C
MGE motors: 0.12 - 11 kW, 2-pole 0.12 - 7.5 kW, 4-pole	-20 to +50 °C
MGE motors: 15-22 kW, 2-pole 11 - 18.5 kW, 4-pole	-20 to +40 °C
Siemens motor with integrated CUE	0 to +45 °C
Other motor sizes:	-20 to +40 °C
Storage	Down to -30 °C

Installation altitude

Pump with standard motor

If the ambient temperature exceeds maximum values or if the motor is located more than 1000 m above sea level, the motor output, P2, must be reduced due to the low density and consequent low cooling effect of the air. In such cases, it may be necessary to use an oversize motor with a higher rated output.

Pos.	Description
3	Siemens IE3 motors: 30-90 kW motors, 2-pole 18.5 - 90 kW motors, 4-pole
2	MG IE3 motors: 0.75 - 22 kW motors, 2-pole 0.75 - 15 kW motors, 4-pole
1	Other motor size*

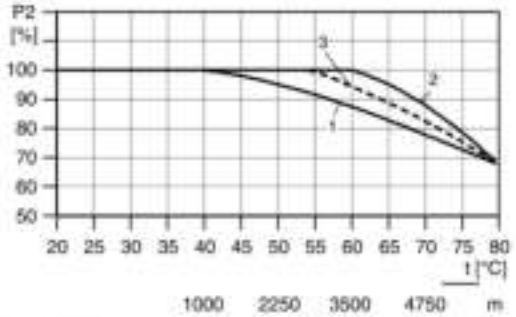

TM04 4914 2209

Fig. 3 Maximum motor output in relation to ambient temperature and altitude

Pump with Grundfos MGE motor

Description
MGE motors: 0.12 - 11 kW, 2-pole 0.12 - 7.5 kW, 4-pole

Installation altitude is the height above sea level of the installation site.

Motors installed up to 1000 m above sea level can be loaded 100 %.

The motors can be installed up to 3500 m above sea level.

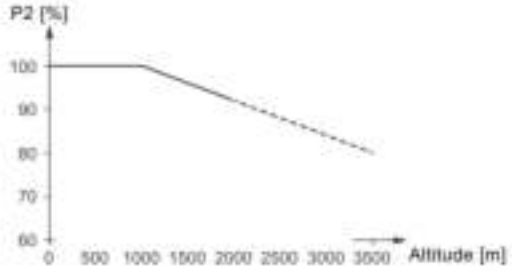

TM05 5243 3717

Fig. 4 Motor output power in relation to altitude

In order to maintain the galvanic isolation and ensure correct clearance according to EN 60664-1:2007, you must adapt the supply voltage to the altitude:

TM06 9666 3617

Fig. 5 Supply voltage for three-phase motor in relation to altitude

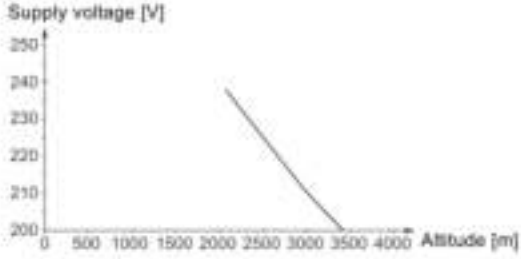

TM06 9667 3617

Fig. 6 Supply voltage for single-phase motor in relation to altitude

Note:

Motors installed more than 1000 m above sea level must not be fully loaded due to the low density and consequent low cooling effect of the air.

If the motor is to operate at ambient temperatures between 50 and 60 °C, select an oversized motor. Contact Grundfos.

Pump with Siemens motor with integrated CUE

Derating must be taken into account when using CUE in these situations:

- low air pressure (heights)
- low speeds
- installations with long motor cables
- cables with a large cross-section
- high ambient temperature.

The required action is described in the next sections.

Low air pressure

At low air pressure, the cooling capability of air is reduced.

At altitudes above 1000 m (3280 ft), the maximum output current should be derated in accordance with the diagram in fig. 7.

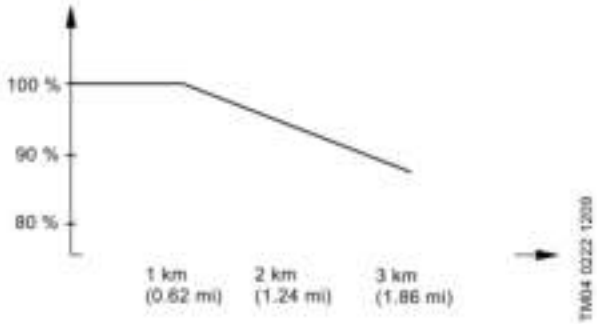

Fig. 7 Derating of output current at low air pressure

At altitudes above 2000 m (6561 ft), the PELV requirements cannot be met.

PELV = Protective Extra Low Voltage.

An alternative is to lower the ambient temperature at high altitudes and thereby ensure 100 % output current at high altitudes.

Example

At an altitude of 2000 m (6561 ft), the output current 24.0 A of the selected CUE must be derated to 92 % according to fig. 7. This is equal to 22.1 A and lower than the maximum motor current 23.6 A. The selection is not valid.

Data of the new selected CUE:

Max. output current:	32.0 A
Typical shaft power:	15.0 kW (20 hp)
Product number (IP20):	96754695

Calculation of derated current at an altitude of 2000 m (6561 ft):

Maximum output current = 32.0 x 0.92 = 29.4 A.

This is higher than the maximum motor current 23.6 A.

The new selection is valid.

High ambient temperature

If the output current is reduced to 80 % of the nominal output current of the CUE in question, the ambient temperature may be 5 °C (41 °F) higher.

The other possibility is to use a unit one size bigger. For higher temperature increases, bigger units are required. The efficiency of the CUE will, however, be reduced at higher temperatures.

If the CUE gets too hot, it will reduce the switching frequency.

Note that the nominal temperature rating depends on the enclosure type.

The maximum ambient temperature of the different enclosures can be found in *Technical data*, page 153.

5. Pumped liquids

Pumped liquids

The pump is suitable for thin, clean, non-aggressive and non-flammable liquids, not containing solid particles or fibres that may attack the pump mechanically or chemically. See *List of pumped liquids* on page 25.

Examples

- Central heating system water. The water must meet the requirements of accepted standards on water quality in heating systems.
- cooling liquids
- hot tap water
- industrial liquids
- softened water.

If glycol or another antifreeze agent is added to the pumped liquid, the pump must have a shaft seal of the BQQE or DQQE type. See *Recommended shaft seal for water-glycol mixture* on page 27.

The pumping of liquids with density and/or kinematic viscosity higher than that of water will have the following effects:

- a considerable pressure drop
- a drop in hydraulic performance
- a rise in power consumption.

In such cases, fit the pump with a bigger motor. If in doubt, contact Grundfos.

If the water contains mineral or synthetic oils or chemicals or if other liquids than water are pumped, chose the O-rings accordingly.

Liquid temperature

Liquid temperature: -40 to +150 °C.

Please note that shaft seals operating close to their maximum temperature will require regular maintenance or replacement.

Pump type	Shaft seal	Temperature
TP Series 100	BQBE	0 to +120 °C
	BQQE	-25 to +120 °C
TP Series 200	BQBE	0 to +140 °C
	BQQE	-25 to +120 °C
TP Series 300, 16-bar version	BAQE	0 to +120 °C (140 °C)[1]
	BQQE	-25 to +120 °C
TP Series 300, 25-bar version	DQQE	-40 to +120 °C
	DAQF	0 to +140 °C[3]
TP Series 300, DN4UU version	DBUE	0 to +150 °C[2]
TPE2, TPE3	BQBE	0 to +120 °C[4]
	BQQE	-25 to +120 °C

[1] TP Series 300, PN 16 pumps are designed for a maximum operating temperature of 140 °C. For operation above 120 °C, select an alternative shaft seal. Contact Grundfos.

[2] At 120 to 150 °C, the maximum operating pressure is less than 23 bar.

[3] For operation above 140 °C, contact Grundfos. At 120 to 150 °C, the maximum operating pressure is less than 23 bar.

[4] 140 °C for a short period.

Depending on the type of cast-iron version and the pump application, the maximum liquid temperature may be limited by local regulations and laws.

List of pumped liquids

TP and TPD pumps are designed for circulation systems with constant flow rate; TPE2, TPE2D, TPE3, TPE3D, TPE and TPED pumps for systems with variable flow rate.

Thanks to their design, you can use the pumps in a wider liquid temperature range than pumps of the canned rotor type.

A number of typical liquids are listed below.

You can use other pump versions, but we consider the ones stated in the list to be the best choices.

The list is intended as a general guide only, and it cannot replace actual testing of the pumped liquids and pump materials under specific working conditions. If in doubt, we recommend that you fill in the form shown on page 280 and contact Grundfos.

Use the list with some caution, as factors such as concentration of the pumped liquid, liquid temperature or pressure may affect the chemical resistance of a specific pump version.

Legend

A	May contain additives or impurities that may cause shaft seal problems.
B	The density and/or viscosity differ from those of water. Consider this when calculating motor and pump performance.
C	The liquid must be oxygen-free (anaerobic).
D	Risk of crystallisation or precipitation in the shaft seal.
E	Insoluble in water.
F	The shaft seal rubber parts must be replaced with FKM rubber.
G	Bronze housing or impeller required.
H	Risk of formation of ice on the standby pump. The risk only applies to TP, TPE Series 200 pumps.

Pumped liquids	Notes	Additional information	Shaft seal					
			TPE2, TPE3	TP Series 100	TP Series 200	TP Series 300 PN 16	TP Series 300 PN 25	TP Series 300 DN 400
Water								
Groundwater		< 120 °C	BQBE BQQE	BQBE BQQE	BQBE BQQE	BQQE	DQQE DAQF[4]	DBUE
		> 120 °C			BQBE	DAQF[2] + [4]	DAQF[4]	
Boiler-feed water		< 120 °C	BQBE BQQE	BQBE BQQE	BQBE BQQE	BAQE BQQE	DQQE DAQF	DBUE
		< 140 °C			BQBE	DAQF[2]	DAQF	DBUE
		< 150 °C					DAUE[2]	DBUE
District-heating water		< 120 °C	BQBE BQQE	BQBE BQQE	BQBE BQQE	BAQE BQQE	DQQE DAQF	DBUE
Condensate		< 120 °C	BQBE BQQE	BQBE BQQE	BQBE BQQE	BAQE BQQE	DQQE DAQF	DBUE
		> 120 °C			BQBE	DAQF[2]	DAQF	
	C	< 120 °C	BQBE BQQE	BQBE BQQE	BQBE BQQE	BQQE BAQE	DQQE DAQF	DBUE
		> 120 °C			BQBE	DAQF[2]	DAQF	
Brackish water	G	pH > 6.5, 40 °C, 1000 ppm Cl⁻	BQBE BQQE	BQBE BQQE	BQBE BQQE	BQQE	DQQE	DBUE
Coolants								
Ethylene glycol	B, D, H	< 120 °C	BQQE	BQQE	BQQE	BQQE	DQQE	
		< 90 °C						DQQE[2]
Glycerine (glycerol)	B, D, H	< 120 °C	BQQE	BQQE	BQQE	BQQE	DQQE	
		< 90 °C						DQQE[2]
Potassium acetate	B, D, C, H	< 120 °C	BQQE	BQQE	BQQE	BQQE	DQQE	
		< 110 °C		BQQE				
		< 90 °C						DQQE[2]
Potassium formate	B, D, C, H	< 120 °C	BQQE	BQQE	BQQE	BQQE	DQQE	
		< 90 °C						DQQE[2]
Propylene glycol	B, D, H	< 120 °C	BQQE	BQQE	BQQE	BQQE	DQQE	
		< 90 °C						DQQE[2]
Brine sodium chloride	B, D, C, H	< 5 °C, 30 %	BQQE	BQQE	BQQE	BQQE	DQQE	DQQE[2]

(To be continued)

Pumped liquids	Notes	Additional information	Shaft seal					
			TPE2, TPE3	TP Series 100	TP Series 200	TP Series 300 PN 16	TP Series 300 PN 25	TP Series 300 DN 400
Synthetic oils								
Silicone oil	B, E		BQBE BQQE	BQBE BQQE	BQBE BQQE	BAQE BQQE	DAQF DQQF	DBUE
Vegetable oils								
Corn oil	B, F, E		BUBV[2) + 3)] BQQV[2) + 3)]	BUBV[2)] BQQV[2)]	BUBV[2)] BQQV[2)]	BAQV[2)] BQQV[2)]	DAQF	DBUV[2)]
Olive oil	B, F, E	< 80 °C	BUBV[2) + 3)] BQQV[2) + 3)]	BUBV[2)] BQQV[2)]	BUBV[2)] BQQV[2)]	BAQV[2)] BQQV[2)]	DAQF	DBUV[2)]
Peanut oil	B, F, E		BUBV[2) + 3)] BQQV[2) + 3)]	BUBV[2)] BQQV[2)]	BUBV[2)] BQQV[2)]	BAQV[2)] BQQV[2)]	DAQF	DBUV[2)]
Rapeseed oil	D, B, F, E		BUBV[2) + 3)] BQQV[2) + 3)]	BUBV[2)] BQQV[2)]	BUBV[2)] BQQV[2)]	BAQV[2)] BQQV[2)]	DAQF	DBUV[2)]
Soybean oil	B, F, E		BUBV[2) + 3)] BQQV[2) + 3)]	BUBV[2)] BQQV[2)]	BUBV[2)] BQQV[2)]	BAQV[2)] BQQV[2)]	DAQF	DBUV[2)]
Cleaning agents								
Soap (salts of fatty acids)	A, E, (F)	< 80 °C	BQQE (BQQV)[2)]	BQQE (BQQV)[2)]	BQQE (BQQV)[2)]	BQQE (BQQV)[2)]	DQQE	DQQE[2)]
Alkaline degreasing agent	A, E, (F)	< 80 °C	BQQE (BQQV)[2)]	BQQE (BQQV)[2)]	BQQE (BQQV)[2)]	BQQE (BQQV)[2)]	DQQE	DQQE[2)]
Oxidants								
Hydrogen peroxide		< 40 °C, < 2 %	BQBE BQQE	BQBE BQQE	BQBE BQQE	BQQE	DAQF DQQF	DQQE[2)]
Salts								
Ammonium bicarbonate	A	< 20 °C, < 15 %	BQQE	BQQE	BQQE	BQQE	DQQE	DQQE[2)]
Calcium acetate	A, B	< 20 °C, < 30 %	BQQE	BQQE	BQQE	BQQE	DQQE	DQQE[2)]
Potassium bicarbonate	A	< 20 °C, < 20 %	BQQE	BQQE	BQQE	BQQE	DQQE	DQQE[2)]
Potassium carbonate	A	< 20 °C, < 20 %	BQQE	BQQE	BQQE	BQQE	DQQE	DQQE[2)]
Potassium permanganate	A	< 20 °C, < 10 %	BQQE	BQQE	BQQE	BQQE	DQQE	DQQE[2)]
Potassium sulphate	A	< 20 °C, < 20 %	BQQE	BQQE	BQQE	BQQE	DQQE	DQQE[2)]
Sodium acetate	A	< 20 °C, < 100 %	BQQE	BQQE	BQQE	BQQE	DQQE	DQQE[2)]
Sodium bicarbonate	A	< 20 °C, < 2 %	BQQE	BQQE	BQQE	BQQE	DQQE	DQQE[2)]
Sodium carbonate	A	< 20 °C, < 20 %	BQQE	BQQE	BQQE	BQQE	DQQE	DQQE[2)]
Sodium nitrate	A	< 0 °C, < 40 %	BQQE	BQQE	BQQE	BQQE	DQQE	DQQE[2)]
Sodium nitrite	A	< 20 °C, < 40 %	BQQE	BQQE	BQQE	BQQE	DQQE	DQQE[2)]
Sodium phosphate (di)	A	< 100 °C, < 30 %	BQQE	BQQE	BQQE	BQQE	DQQE	DQQE[2)]
Sodium phosphate (tri)	A	< 90 °C, < 20 %	BQQE	BQQE	BQQE	BQQE	DQQE	DQQE[2)]
Sodium sulphate	A	< 20 °C, < 20 %	BQQE	BQQE	BQQE	BQQE	DQQE	DQQE[2)]
Sodium sulphite	A	< 20 °C, < 1 %	BQQE	BQQE	BQQE	BQQE	DQQE	DQQE[2)]
Alkalis								
Ammonium hydroxide		< 100 °C, < 30 %	BQQE	BQQE	BQQE	BQQE	DQQE	DQQE[2)]
Calcium hydroxide	A	< 100 °C, < 10 %	BQQE	BQQE	BQQE	BQQE	DQQE	DQQE[2)]
Potassium hydroxide	A	< 20 °C, < 20 %	BQQE	BQQE	BQQE	BQQE	DQQE	DQQE[2)]
Sodium hydroxide	A	< 40 °C, < 20 %	BQQE	BQQE	BQQE	BQQE	DQQE	DQQE[2)]

1) Do not use BAQE for potable water. For potable water, we recommend that you use a BBQE shaft seal.
2) The shaft seal is not standard, but available on request.
3) Applies only for TPE2.
4) Do not use for potable water.

Recommended shaft seal for water-glycol mixture

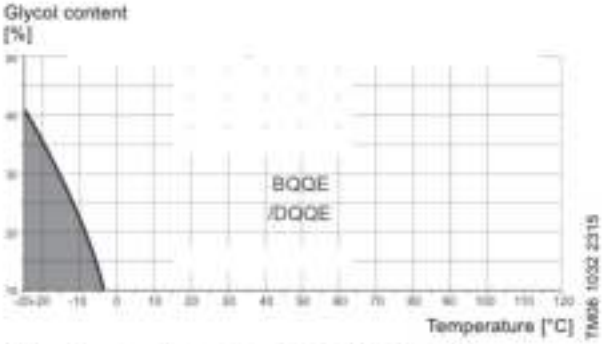

Fig. 8 Operating range of EPDM shaft seals

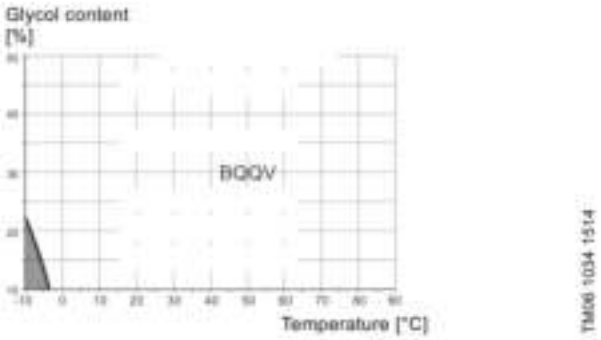

Fig. 9 Operating range of FKM shaft seals

6. TP Series 100 and 200 pumps

Fig. 10 TP Series 100 and TP Series 200

Technical data

Flow rate:	Up to 90 m^3/h
Head:	Up to 27 m
Liquid temperature, TP Series 100:	-25 to +120 °C
Liquid temperature, TP Series 200:	-25 to +140 °C
Maximum operating pressure:	Up to 16 bar
Direction of rotation:	Counterclockwise

Construction

Grundfos TP Series 100 and Series 200 pumps are single-stage, close-coupled pumps with in-line inlet and outlet ports of identical diameter.

The pumps are fitted with a fan-cooled asynchronous motor. Motor and pump shafts are connected via a rigid two-part coupling.

TP Series 100 pumps with union connection are available as single-head, TP, pumps.

TP Series 200 pumps are available as single-head, TP, and twin-head, TPD, pumps.

TP Series 200 pumps have PN 6 or PN 10 flanges.

The pumps are fitted with an unbalanced mechanical shaft seal.

The pumps are of the top-pull-out design, that is you can remove the power head (motor, pump head and impeller) for maintenance or service while the pump housing remains in the pipes.

The twin-head pumps are designed with two parallel power heads. A flap valve in the common outlet port is opened by the flow of the pumped liquid and prevents backflow of liquid into the idle pump head.

As radial and axial forces are absorbed by the fixed bearing in the motor drive-end, the pump requires no bearing.

The pumps are fitted with high-efficiency motors.

Pumps with a bronze or stainless-steel pump housing are suitable for hot water recirculation.

Materials

TP Series 100

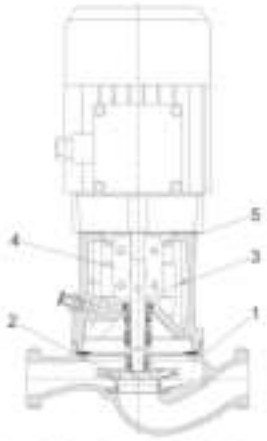

Fig. 11 Sectional drawing of TP Series 100 with union connection

Material specification, Series 100

Pos.	Component	Material	EN/DIN
1	Pump housing	Cast iron EN-GJL-150, EN-GJL-200, stainless steel	EN-JL 1020 EN-JL 1030 1.4308
2	Impeller	Composite PES/PP 30 % GF	
3	Shaft	Stainless steel	1.4057
4	Coupling	Cast iron EN-GJL-400	0.7040
5	Pump head	Cast iron EN-GJL-200, stainless steel	EN-JL 1030 1.4308
	Secondary seals	EPDM	
	Rotating seal face	Silicon carbide	
	Stationary seat	Carbon (resin-impregnated), silicon carbide	

TP Series 200

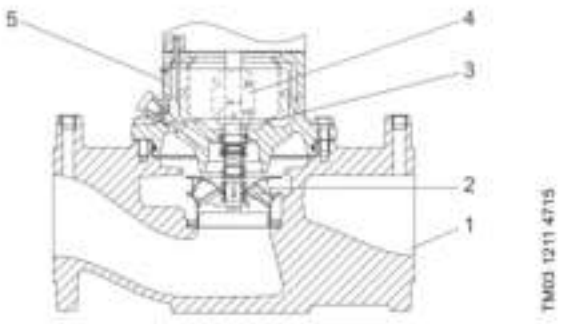

Fig. 12 Sectional drawing of TP Series 200 with flange connection

Material specification, Series 200

Pos.	Component	Material	EN/DIN
1	Pump housing	Cast iron EN-GJL-250, bronze CuSn10	EN-JL 1040 2.1093
2	Impeller	Stainless steel	1.4301
3	Shaft	Stainless steel	1.4305
4	Coupling	Cast iron EN-GJL-400	0.7040
5	Pump head	Cast iron EN-GJL-250, bronze	0.6025 2.1093
	Secondary seals	EPDM	
	Rotating seal face	Silicon carbide	
	Stationary seat	Carbon (resin-impregnated), silicon carbide	

Mechanical shaft seal

Two types of unbalanced mechanical shaft seal are available as standard:

- **BQBE**
  The BQBE shaft seal is a rubber bellows seal with silicon carbide/carbon seal faces and secondary seals of EPDM.
- **BQQE**
  The BQQE shaft seal is a rubber bellows seal with silicon carbide/silicon carbide seal faces and secondary seals of EPDM.

For more information about common pumped liquids with recommended shaft seals, see page 25.

Shaft seal specification

shaft seal	TP Series 100	Version KU according to EN 12756
	TP, TPD Series 200	Version NU according to EN 12756
Shaft diameter		12 and 16 mm
Rubber bellows		EPDM
Seal faces		Silicon carbide/carbon
		Silicon carbide/silicon carbide

Special shaft seals are available for partly conditioned water or other liquids containing abrasive or crystallising particles. See page 25.

Connections

TP Series 100 pumps with union connection have inlet and outlet union threads to ISO 228-1.

TP Series 200 pumps up to DN 65 are fitted with combination flanges PN 6 / PN 10. DN 80 or DN 100 pumps have either PN 6 or PN 10 flanges. You can connect all flanges to flanges in accordance with EN 1092-2 and ISO 7005-2.

Features and benefits

TP Series 100 and Series 200 pumps have these features and benefits:

Optimised hydraulics for high efficiency

– Reduced power consumption.

High-efficiency motors

– TP pumps are fitted with high-efficiency motors. High-efficiency motors offer reduced energy consumption. TP pumps are primarily fitted with motors that meet the legislative requirements of the EuP IE3 grade. For further information, see *Motors*, pages 129 to 134.

Top-pull-out design

– Easy dismantling in case of service.

In-line design

– Contrary to end-suction pumps, in-line pumps allow straight pipes and thus often reduce installation costs.

Pump housing and pump head are electrocoated to improve the corrosion resistance

– Electrocoating includes:
  1. Alkaline cleaning.
  2. Pretreatment with zinc phosphate coating.
  3. Cathodic electrocoating, epoxy.
  4. Curing of paint film at 200 to 250 °C.

  For low-temperature applications at a high humidity, Grundfos offers TP pumps with extra surface treatment to avoid corrosion. These pumps are available on request.

Stainless-steel impeller and neck ring

– Wear-free operation with high efficiency.

7. TP Series 300 pumps

Gr6259

Fig. 13 TP Series 300

Technical data

	PN 16 version	PN 25 version
Flow rate [m³/h]	Up to 2000	Up to 4500
Head [m]	Up to 93	Up to 140
Liquid temperature [°C]	-25 to +140	-40 to +150*
Maximum operating pressure [bar]	16	25
Direction of rotation	Clockwise	

* At 120 to 150 °C, the maximu s less than 23 bar.

Construction

Grundfos TP, TPD Series 300 pumps are single-stage, close-coupled pumps with in-line inlet and outlet ports of identical diameter.

The pumps are fitted with a fan-cooled asynchronous motor. Motor and pump shafts are connected via a rigid sleeve coupling.

Most TP Series 300 pumps are available as single-head, TP, and twin-head, TPD pumps.

TP Series 300 pumps have PN 16 flanges or PN 25 flanges.

The largest pumps have DN 500, PN 40 inlet flanges and DN 400, PN 40 outlet flanges and a maximum operating pressure of 25 bar.

The pumps are fitted with an unbalanced or a balanced mechanical shaft seal.

The pumps are of the top-pull-out design, that is you can remove the power head (motor, pump head and/or motor stool and impeller) for maintenance or service while the pump housing remains in the pipes.

The pump housing is provided with a replaceable wear ring to ensure high pump efficiency for life.

The twin-head pumps are designed with two parallel power heads. A non-return flap valve in the common outlet port is opened by the flow of the pumped liquid and prevents backflow of liquid into the idle pump head.

As radial and axial forces are absorbed by the fixed bearing in the motor drive-end, the pump requires no bearing.

The impeller is hydraulically balanced to minimise axial forces.

TP, TPD Series 300 pumps are fitted with high-efficiency motors.

TP Series 300 pumps with bronze impeller are suitable for pumping brine.

Materials

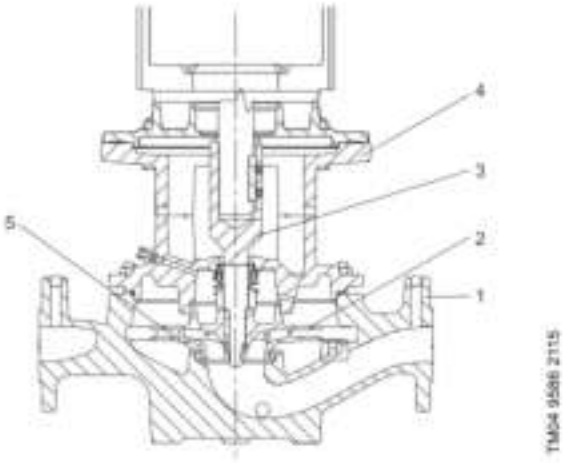

Fig. 14 Sectional drawing of TP Series 300

Material specification

TP Series 300, PN 16

Pos.	Component	Material	EN/DIN
1	Pump housing	Cast iron EN-GJL-250	EN-JL 1040
2	Impeller	Cast iron EN-GJL-200, bronze CuSn10	EN-JL 1030 2.1093
3	Stub shaft Two-part stub shaft	Stainless steel Stainless steel/steel	1.4301 1.4301/1.0301
4	Pump head/motor stool	Cast iron EN-GJL-250	EN-JL 1040
	Secondary seals	EPDM	
	Rotating seal face	Metal-impregnated carbon Silicon carbide	
	Stationary seat	Silicon carbide	
5	Wear ring	Brass CuZn34Mn3Al2Fe1-C	CC7645

TP Series 300, PN 25

Pos.	Component	Material	EN/DIN
1	Pump housing	Ductile cast iron EN-GJS-400-18-LT	EN-JS 1025
2	Impeller	Cast iron EN-GJL-200, bronze CuSn10	EN-JL 1030 2.1093
3	Stub shaft Two-part stub shaft	Stainless steel Stainless steel/steel	1.4301 1.4301/1.0301
4	Motor stool	Cast iron EN-GJL-250	EN-JL 1040
	Secondary seals	EPDM FXM	
	Rotating seal face	Metal-impregnated carbon Silicon carbide	
	Stationary seat	Silicon carbide	
5	Wear ring	Brass CuZn34Mn3Al2Fe1-C	CC7645

TP Series 300, DN 400, PN 25

Pos.	Component	Material	EN/DIN
1	Pump housing	Ductile cast iron EN-GJS-400-18 (A-LT)	EN-JS1020
2	Impeller	Ductile cast iron EN-GJS-400	EN-JS1030
		Bronze CuSn10	2.1093
3	Pump shaft	Stainless steel	1.4436
4	Coupling	Cast iron EN-GJL-250	EN-JL1040
5	Motor stool	Cast iron EN-GJL-250	EN-JL1040
	Secondary seals	EPDM rubber	
	Rotating seal face	Resin-impregnated carbon	
	Stationary seat	Tungsten carbide	

Mechanical shaft seal

For 16-bar versions, the following types of unbalanced mechanical shaft seals are available as standard:

- **BAQE**
  The BAQE shaft seal is a rubber bellows seal with carbon/silicon carbide seal faces and secondary seals of EPDM.
- **BQQE**
  The BQQE shaft seal is a rubber bellows seal with silicon carbide/silicon carbide seal faces and secondary seals of EPDM.

For 25-bar versions, the following types of balanced mechanical shaft seals are available as standard:

- **DAQF**
  The DAQF shaft seal is a balanced O-ring seal with carbon/silicon carbide seal faces and secondary seals of FXM.
- **DQQE**
  The DQQE shaft seal is a balanced O-ring seal with silicon carbide/silicon carbide seal faces and secondary seals of EPDM.
- **DBUE**
  The DBUE shaft seal is a balanced O-ring seal with carbon/tungsten carbide seal faces and secondary seals of EPDM.

For further information about common pumped liquids with recommended shaft seals, see page 25.

Special shaft seals are available for partly conditioned water or other liquids containing abrasive or crystallising particles. See page 25.

Connections

TP Series 300 pumps have PN 16 or PN 25 flanges. All dimensions are according to ISO 7005-2 or EN 1092-2.

Features and benefits

TP Series 300 pumps have these features and benefits:

Optimised hydraulics for high efficiency

– Reduced power consumption.

High-efficiency motors

– TP pumps are fitted with high-efficiency motors. High-efficiency motors offer reduced energy consumption. TP pumps are primarily fitted with motors that meet the legislative requirements of the EuP IE3 grade. TP pumps are also available with motors from 2.2 to 132 kW that meet the legislative requirements of the EuP IE4 grade. For further information, see *Motors* on pages 129 to 134.

Top-pull-out design

– Easy dismantling in case of service.

In-line design

– Contrary to end-suction pumps, in-line pumps allow straight pipes and thus often reduce installation costs.

Motor-pump shaft with sleeve coupling

– Stable and quiet operation.

– Easy dismantling in case of service.

Hydraulically and mechanically balanced impeller

– The impeller is hydraulically and mechanically balanced to increase the life of motor bearings and shaft seal.

Surface treatment

TP Series 300 pumps are given the following surface treatment:

Pump type	Electrocoating	Spray painting
TP Series 300 from DN 32 to DN 350	x	
TP Series 300, DN 40[a]		--

Electrocoating includes:

1. Alkaline cleaning.
2. Pretreatment with zinc phosphate coating.
3. Cathodic electrocoating, epoxy.
4. Curing of paint film at 200-250 °C.

For low-temperature applications at a high humidity, Grundfos offers TP pumps with extra surface treatment to avoid corrosion. These pumps are available on request.

8. TPE Series 1000 pumps

Fig. 15 TPE Series 1000

Technical data

Flow rate:	Up to 1100 m^3/h
Head:	Up to 92 m
Liquid temperature:	-25 to +150 °C
Maximum operating pressure:	25 bar
Motor sizes, single-phase:	0.12 to 1.5 kW
Motor sizes, three-phase:	0.12 to 55 kW

Construction

TPE, TPED Series 1000 pumps are based on TP, TPD Series 100, 200 and 300 pumps.

The main difference between the TP and the TPE Series 1000 pump range is the motor. The motor of TPE Series 1000 pumps has a built-in frequency converter for continuous adjustment of the pressure to the flow rate. All pumps with 2-pole motors up to 11 kW and 4-pole motors up to 7.5 kW are fitted with Grundfos permanent-magnet MGE motors with motor efficiency class IE5 according to IEC 60034-30-2.

The pumps are suitable for applications where the pressure, temperature, flow rate or another parameter is to be controlled on the basis of signals from a sensor at some point in the system.

Note: The pumps are not fitted with a sensor from the factory.

For further information on construction and materials of the pumps, see pages 28 to 32.

Applications

TPE Series 1000 pumps have integrated speed control for automatic adaptation of performance to current conditions.

The energy consumption is thus kept at a minimum.

The pumps can operate at any duty point within the range between 25 and 100 % speed. In a part of the duty range, the pumps with MGE motor can operate at speeds up to 110 %.

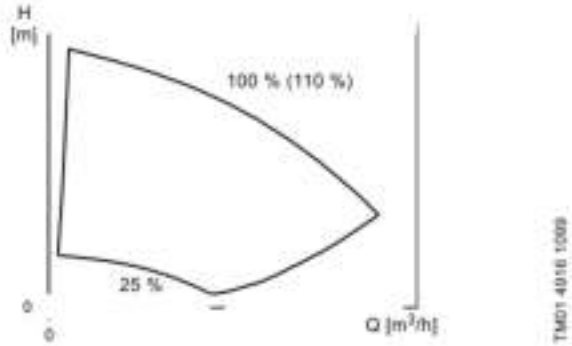

Fig. 16 Duty range of TPE Series 1000 pumps

The 100 % curve corresponds to the curve of a pump with a mains-operated motor.

Depending on the application, the pumps offer energy savings, increased comfort or improved processing.

The pumps can be fitted with sensor types meeting the requirements mentioned in *28. Accessories* on page 255.

The charts below show possible control modes of the pumps in different applications.

System application	Select this control mode	Pump type
In systems with relatively large pressure losses in the distribution pipes and in air-conditioning and cooling systems. • Two-pipe heating systems with d the following: – very long distribution pipes – strongly throttled pipe balancing valves – differential-pressure regulators – large pressure losses in those parts of the system through which the total quantity of water flows, for example boiler, heat exchanger and distribution pipe up to the first branching. • Primary circuit pumps in systems with large pressure losses in the primary circuit. • Air-conditioning systems with the following: – heat exchangers (fan coils) – cooling ceilings – cooling surfaces.	**Constant differential pressure with differential-pressure sensor located in the system** 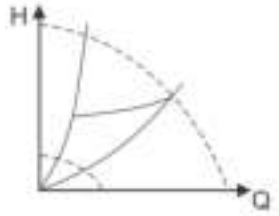	All
In systems with relatively small pressure losses in the distribution pipes. • Two-pipe heating systems with thermostatic valves and the following: – sized for natural circulation – small pressure losses in those parts o hich the total quantity of water flows, for example boiler, heat exchanger and distribution pipe up to the first branching, or modified to a high differential temperature between flow pipe and return pipe, for example district heating. • Underfloor heating systems with thermostatic valves. • One-pipe heating systems with thermostatic valves or pipe balancing valves. • Primary circuit pumps in systems with small pressure losses in the primary circuit.	**Constant differential pressure** 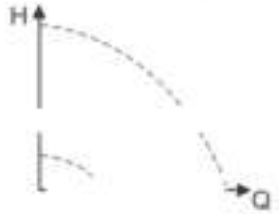	All
In pressure boosting systems.	**Constant pressure** 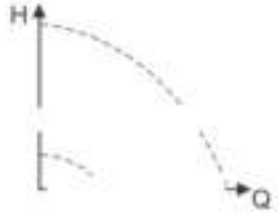	All
In systems with a fixed system characteristic. Examples: • one-pipe heating systems • boiler shunts • systems with three-way valves • hot water recirculation.	**Constant temperature** 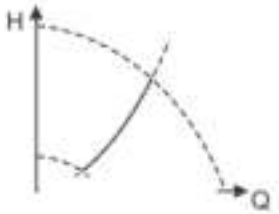	All
	Constant differential temperature 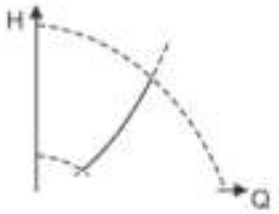	0.12 - 11 kW, 2-pole 0.12 - 7.5 kW, 4-pole
If an external controller is installed, the pump is able to change from one constant curve to another, depending on the value of the external signal. The pump can also be set to operate according to the maximum or minimum curve: • Use the maximum-curve mode in periodi flow rate is required. This operating mode is for instance suitable for hot-water priority. • Use the minimum-curve mode in periods in which a minimum flow rate is required.	**Constant curve** 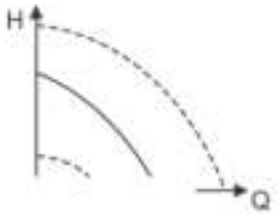	All

System application	Select this control mode	Pump type
In systems requiring a constant flow rate, independently of pressure drop. Examples: • chillers for air-conditioning • heating surfaces • cooling surfaces.	**Constant flow rate** 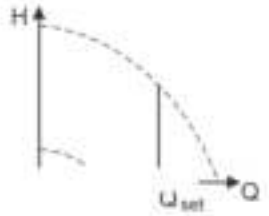	All
In systems requiring a constant tank level, independently of the flow rate. Examples: • process water tanks • boiler condensate tanks.	**Constant level** 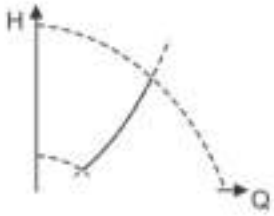	0.12 - 11 kW, 2-pole 0.12 - 7.5 kW, 4-pole
In systems with pumps operating in parallel. The multipump function enables the control of single-head pumps connected in parallel (two to four pumps) and without the use of external controllers. The pumps in a multipump system communicate with each other via the wireless GENIair connection or the wired GENI connection.	**"Assist" menu, "Multipump setup"**	0.12 - 11 kW, 2-pole 0.12 - 7.5 kW, 4-pole

TPE, TPED pumps with extended performance range

Standard TPE, TPED pumps with MGE motor, 50 Hz, are able to operate in a range above the 100 % curve. See fig. 17.

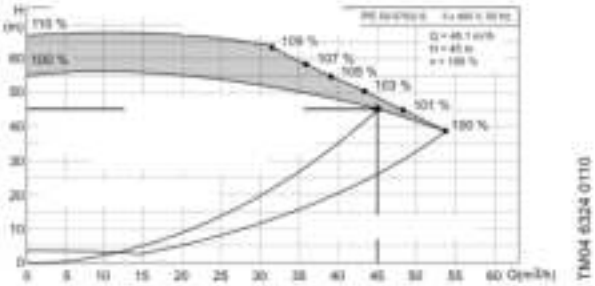

Fig. 17 TPE and TPED pumps with extended performance range

The extended range is provided by means of optimised software which utilises the MGE motor in an optimum way. The result is that the pump is able to deliver higher head and flow with the same motor size.

The curve sheets in the TP data booklet only show the nominal 100 % QH curve.

Grundfos Product Center shows the extended performance range of the pumps. See page 282.

Operating modes of twin-head pumps

The following operating modes are available for twin-head pumps:

Alternating operation

The two pumps run alternately for 24 operating hours. In case of fault in the operating pump, the other pump starts.

Standby operation

One pump is in constant operation. Every 24 operating hours the standby pump starts and runs for a short period to prevent it from seizing up. In case of fault in the operating pump, the standby pump starts.

In case of sensor fault, the operating pump switches to maximum operation.

Control options

Communication with TPE, TPED Series 1000 pumps is possible via a central building management system, remote control (Grundfos GO) or control panel.

The purpose of controlling a pump is to monitor and control the pressure, temperature, flow rate and liquid level of the system.

For further information on control options of the pumps, see page 124.

9. TPE Series 2000 pumps

Fig. 18 TPE Series 2000

Technical data

Flow rate:	Up to 1100 m^3/h
Head:	Up to 92 m
Liquid temperature:	-25 to +140 °C
Maximum operating pressure:	16 bar
Motor sizes (single-phase):	0.12 to 1.5 kW
Motor sizes (three-phase):	0.12 to 55 kW

Construction

TPE, TPED Series 2000 pumps are based on TP, TPD Series 200 and 300 pumps.

The main differences between the TP and the TPE Series 2000 pumps are the motor and the factory-fitted differential-pressure sensor.

The motor of TPE Series 2000 pumps has a built-in frequency converter for continuous adjustment of the pressure to the flow rate. All pumps with 2-pole motors up to 11 kW and 4-pole motors up to 7.5 kW are fitted with Grundfos permanent-magnet MGE motors that have motor efficiency class IE5 according to IEC 60034-30-2.

The range is a preset solution for quick and safe installation. The pumps fitted with 2-pole motors below 15 kW and 4-pole motors below 11 kW have a colour display for easy and intuitive pump setup and with full access to all functions.

Fig. 19 Example of main display on a TPE Series 2000 with advanced control panel

For further information on construction and materials of the pumps, see pages 28 to 32.

Applications

TPE Series 2000 pumps have integrated speed control for automatic adaptation of performance to current conditions.

The energy consumption is thus kept at a minimum.

The pumps can operate at any duty point within the range between 25 and 100 % speed. In a part of the duty range, the pumps with MGE motor can operate at speeds up to 110 %.

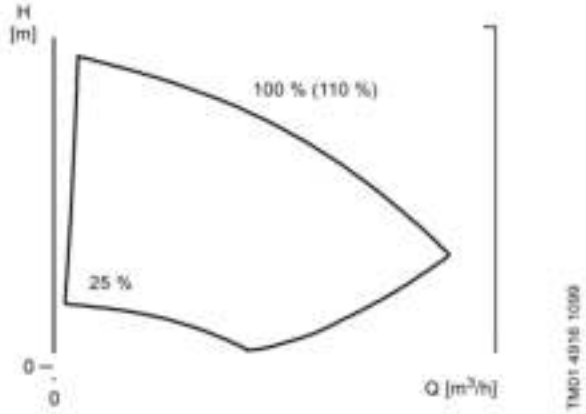

Fig. 20 Duty range of TPE Series 2000 pumps

The 100 % curve corresponds to the curve of a pump with a mains-operated motor.

Depending on the application, the pumps offer energy savings, increased comfort or improved processing.

The pumps are suitable for applications requiring pressure control.

Proportional pressure

The pumps are factory-set to proportional pressure control. We recommend that you use proportional pressure control in systems with relatively large pressure losses, as it is the most economical control mode.

The charts below show possible control modes of the pumps in different applications.

System application	Select this control mode	Pump type
In systems with relatively large pressure losses in the distribution pipes and in air-conditioning and cooling systems. • Two-pipe heating systems with d the following: – very long distribution pipes – strongly throttled pipe balancing valves – differential-pressure regulators – large pressure losses in those parts of the system through which the total quantity of water flows, for example boiler, heat exchanger and distribution pipe up to the first branching. • Primary circuit pumps in systems with large pressure losses in the primary circuit. • Air-conditioning systems with the following: – heat exchangers (fan coils) – cooling ceilings – cooling surfaces.	**Proportional pressure** 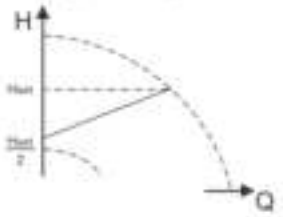	All
In systems with relatively large pressure losses in the distribution pipes and in air-conditioning and cooling systems. • Two-pipe heating systems with d the following: – very long distribution pipes – strongly throttled pipe balancing valves – differential-pressure regulators – large pressure losses in those parts of the system through which the total quantity of water flows, for example boiler, heat exchanger and distribution pipe up to the first branching. • Primary circuit pumps in systems with large pressure losses in the primary circuit. • Air-conditioning systems with the following: – heat exchangers (fan coils) – cooling ceilings – cooling surface*	**Constant differential pressure with differential-pressure sensor located in the system** 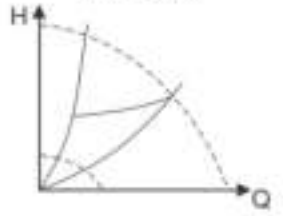	0.12 - 11 kW, 2-pole 0.12 - 7.5 kW, 4-pole
In systems with relatively small pressure losses in the distribution pipes. • Two-pipe heating systems with thermostatic valves and the following: – sized for natural circulation – small pressure losses in those parts o rhich the total quantity of water flows, for example boiler, heat exchanger and distribution pipe up to the first branching or modified to a high differential temperature between flow pipe and return pipe, for example district heating. • Underfloor heating systems with thermostatic valves. • One-pipe heating systems with thermostatic valves or pipe balancing valves. • Primary circuit pumps in systems with small pressure losses in the primary circuit.	**Constant differential pressure** 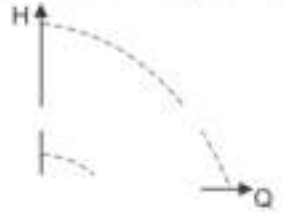	All
In pressure boosting systems.	**Constant pressure** 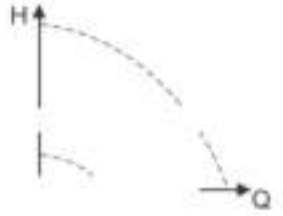	0.12 - 11 kW, 2-pole 0.12 - 7.5 kW, 4-pole
In systems with a fixed system characteristic. Examples: • one-pipe heating systems • boiler shunts • systems with three-way valves • hot water recirculation.	**Constant temperature** 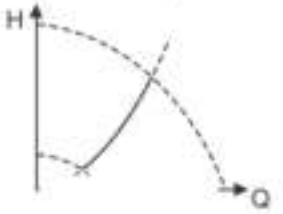	0.12 - 11 kW, 2-pole 0.12 - 7.5 kW, 4-pole
	Constant differential temperature 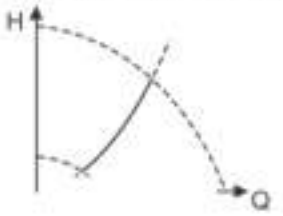	0.12 - 11 kW, 2-pole 0.12 - 7.5 kW, 4-pole

System application	Select this control mode	Pump type
If an external controller is installed, the pump is able to change from one constant curve to another, depending on the value of the external signal. The pump can also be set to operate according to the maximum or minimum curve: • Use the maximum curve mode in periods in which a maximum flow rate is required. This operating mode is for instance suitable for hot-water priority. • Use the minimum curve mode in periods in which a minimum flow rate is required.	**Constant curve** 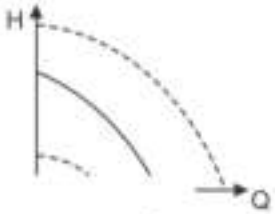	All
In systems requiring a constant flow, independently of pressure drop. Examples: • chillers for air-conditioning • heating surfaces • cooling surfaces.	**Constant flow rate** 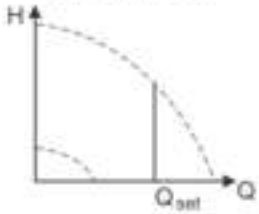	0.12 - 11 kW, 2-pole 0.12 - 7.5 kW, 4-pole
In systems requiring a constant tank level, independently of the flow rate. Examples: • process water tanks • boiler condensate tanks.	**Constant level** 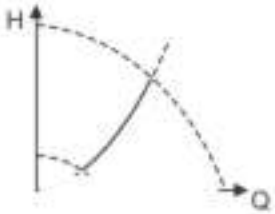	0.12 - 11 kW, 2-pole 0.12 - 7.5 kW, 4-pole
In systems with pumps operating in parallel. The multipump function enables the control of single-head pumps connected in parallel (two to four pumps) without the use of external controllers. The pumps in a multipump system communicate with each other via the wireless GENIair connection or the wired GENI connection.	**"Assist" menu, "Multipump setup"**	0.12 - 11 kW, 2-pole 0.12 - 7.5 kW, 4-pole

TPE, TPED pumps with extended performance range

Standard TPE, TPED pumps with MGE motor, 50 Hz, are able to operate in a range above the 100 % curve. See fig. 21.

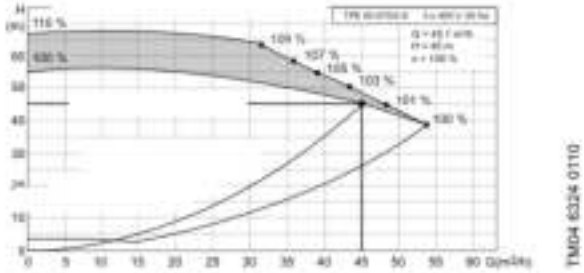

Fig. 21 TPE and TPED pumps with extended performance range

The extended range is provided by means of optimised software which uses the MGE motor in an optimum way. The result is that the pump is able to deliver higher head and flow with the same motor size.

The curve sheets in the TP data booklet only show the nominal 100 % QH curve.

Grundfos Product Center shows the extended performance range of the pumps. See page 282.

Operating modes of twin-head pumps

The following operating modes are available for twin-head pumps:

Alternating operation

The two pumps run alternately for 24 operating hours. In case of fault in the operating pump, the other pump starts.

Standby operation

One pump is in constant operation. Every 24 operating hours the standby pump starts and runs for a short period to prevent it from seizing up. In case of fault in the operating pump, the standby pump starts.

In case of sensor fault, the operating pump switches to maximum operation.

Control options

Communication with the pumps is possible via a central building management system, remote control (Grundfos GO) or control panel.

The purpose of controlling the pumps is to monitor and control the pressure, temperature, flow rate and liquid level of the system.

For further information on control options of the pumps, see page 124.

10. TPE2

Fig. 22 TPE2 and TPE2 D pumps

Technical data

Flow rate:	Up to 120 m^3/h
Head:	Up to 25 m
Liquid temperature:	-25 to +120 °C (140 °C for a short period)
Maximum operating pressure:	16 bar
Motor sizes, single-phase:	0.25 to 1.5 kW
Motor sizes, three-phase:	0.25 to 2.2 kW

Construction

Via an external signal from a sensor or a controller, the pumps allow for any configuration and control method required, that is constant pressure, temperature, flow rate or level.

The permanent-magnet motor has a built-in frequency converter for continuous adjustment of the pressure to the flow rate. All pumps are fitted with Grundfos permanent-magnet MGE motors that have motor efficiency class IE5 according to IEC 60034-30-2.

The range is a preset solution for quick and safe installation.

The pumps are available as single-head, TPE2, and twin-head, TPE2 D, pumps.

The pumps have PN 6, PN 10 or PN 16 flanges.

The pumps are fitted with an unbalanced mechanical shaft seal.

The power head (motor, pump head and impeller) and pump housing are held together by a specially designed clamp. The clamp allows for fast repositioning of the pump housing and fast service of the pump.

The twin-head pumps are designed with two parallel power heads. A flap valve in the common outlet port is opened by the flow of the pumped liquid and prevents backflow of liquid into the idle pump head.

As radial and axial forces are absorbed by the fixed bearing in the motor drive-end, the pump requires no bearing.

Pumps with stainless-steel pump housing, version I, are suitable for hot water recirculation.

Materials

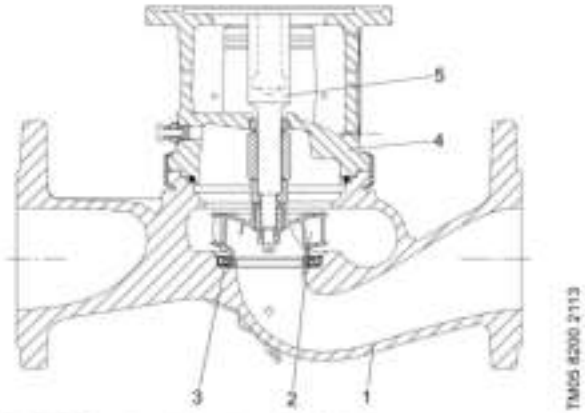

Fig. 23 Sectional drawing of a TPE2 pump

Material specification

Pos.	Component	Material	EN/DIN
1	Pump housing	Cast iron EN-GJL-250 Stainless steel	EN1561 EN 1.4308
2	Impeller	Composite PES-GF30	
3	Neck ring	Stainless steel	EN 1.4404
4	Pump head/motor stool	Cast iron EN-GJL-250 Stainless steel	EN1561 EN 1.4308
	Secondary seals	EPDM	
	Rotating seal face	Silicon carbide	
	Stationary seat	Carbon (resin-impregnated) Silicon carbide	
5	Stub shaft	Stainless steel	EN 1.4404

Applications

The pumps have integrated speed control for automatic adaptation of performance to current conditions.

The energy consumption is thus kept at a minimum.

The pumps can operate at any duty point within the range between minimum and maximum speed.

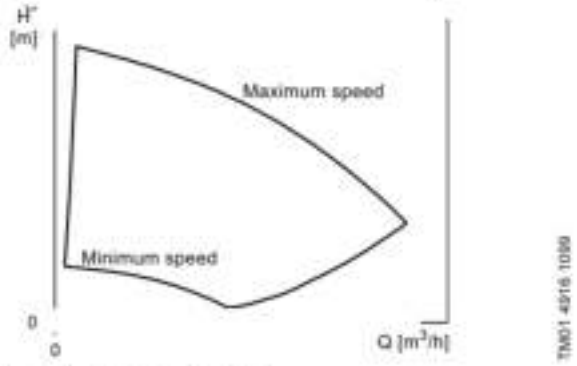

Fig. 24 Duty range of TPE2

Depending on the application, the pumps offer energy savings, increased comfort or improved processing.

The pumps can be fitted with sensor types meeting the requirements mentioned in *28. Accessories* on page 255.

Constant curve

The pumps are factory-set to constant-curve control mode.

System application	Select this control mode	Pump type
In systems with relatively large pressure los ipes and in air-conditioning and cooling systems. • Two-pipe heating systems with d the following: • very long distribution pipes • strongly throttled pipe balancing valves • differential-pressure regulators • large pressure losses in those parts o hich the total quantity of water flows, for example boiler, heat exchanger and distribution pipe up to the first branching • primary circuit pumps in systems with large pressure losses in the primary circuit • air-conditioning systems with the following: – heat exchangers (fan coils) – cooling ceilings – cooling surfaces.	**Constant differential-pressure with differential pressure sensor located in the system** 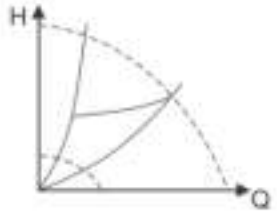 	All
In systems with relatively small pressure losses in the distribution pipes. • Two-pipe heating systems with thermostatic valves and the following: – sized for natural circulation – small pressure losses in those parts of the system through which the total quantity of water flows, for example boiler, heat exchanger and distribution pipe up to the first branching, or modified to a high differential temperature between flow pipe and return pipe, for example district heating. • Underfloor heating systems with thermostatic valves. • One-pipe heating systems with thermostatic valves or pipe balancing valves. • Primary circuit pumps in systems with small pressure losses in the primary circuit.	**Constant differential pressure** 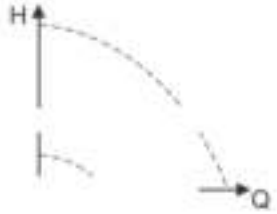 	All
In pressure boosting systems.	**Constant pressure**  	All
In systems with a fixed system characteristic. Examples: • one-pipe heating systems • boiler shunts • systems with three-way valves • hot water recirculation.	**Constant temperature and constant differential temperature** 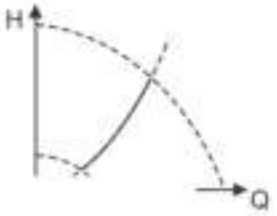 	All

System application	Select this control mode	Pump type
If an external controller is installed, the pump is able to change from one constant curve to another, depending on the value of the external signal. The pump can also be set to operate according to the maximum or minimum curve, like an uncontrolled pump: • Use the maximum curve mode in periods in which a maximum flow rate is required. This operating mode is for instance suitable for hot-water priority. • Use the minimum curve mode in periods in which a minimum flow rate is required. This operating mode is for instance suitable for manual night setback instead of automatic night setback.	**Constant curve** 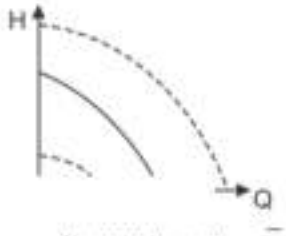	All
In systems requiring a constant flow rate, independently of pressure drop. Examples: • chillers for air-conditioning • heating surfaces • cooling surfaces.	**Constant flow rate** 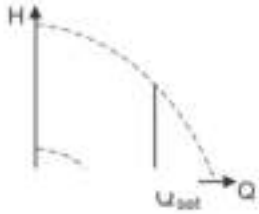	All
In systems requiring a constant tank level, independently of the flow rate. Examples: • process water tanks • boiler condensate tanks.	**Constant level** 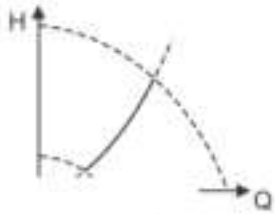	All
In systems with pumps operating in parallel. The multipump function enables the control of single-head pumps connected in parallel (two to four pumps) and twin-head pumps without the use of external controllers. The pumps in a multipump system communicate with each other via the wireless GENIair connection or the wired GENI connection.	**"Assist" menu** **"Multipump setup"**	All

Multipump system

The multipump function enables the control of single-head pumps connected in parallel or twin-head pumps without the use of external controllers. The pumps in a multipump system communicate with each other via the wireless GENIair connection or the wired GENI connection.

You set a multipump system via a selected pump, that is the master pump which is the first selected pump.

If you configure two pumps in the system with an outlet-pressure sensor, both pumps can function as master pumps and take over the master pump function if the other fails. This provides additional redundancy in the multipump system.

You can connect all Grundfos pumps with a wireless GENIair connection to the multipump system.

The multipump functions are described in the following sections.

Alternating operation

Alternating operation functions as a duty-standby operating mode and is possible with two pumps of e size and type connected in parallel. The main purpose of the function is to ensure an even amount of running hours and to ensure that the standby pump takes over if the running pump stops due to an alarm. Each pump requires a non-return valve in series with the pump.

You can choose between two alternating operation modes:

- Alternating operation, time
  Pump changeover to the other is based on time.
- Alternating operation, energy
  Pump changeover to the other is based on energy consumption.
  If the duty pump fails, the other pump takes over automatically.
  Only one pump is operating at a time. The change from one pump to the other depends on time or energy. If a pump fails, the other pump takes over automatically.

Pump system:

- Twin-head pump.
- Two single-head pumps connected in parallel. The pumps must be of the same type and size. Each pump requires a non-return valve in series with the pump.

Backup operation

Backup operation is possible with two pumps of same size and type connected in parallel. Each pump requires a non-return valve in series with the pump.

One pump is operating continuously. The backup pump is operated for a short time each day to prevent seizing up. If the duty pump stops due to a fault, the backup pump starts automatically.

Pump system:

- Twin-head pump.
- Two single-head pumps connected in parallel. The pumps must be of the same type and size. Each pump requires a non-return valve in series with the pump.

Cascade operation

Cascade operation ensures that the pump performance is automatically adapted to the consumption by switching pumps on or off. The system thus runs as energy-efficiently as possible with a constant pressure and a limited number of pumps.

When a twin-head pump is running in constant-pressure control mode, the second pump head starts at 90 % and stops at 50 % performance.

All pumps in operation will run at equal speed. Pump changeover is automatic and depends on energy, operating hours and fault.

Pump system:

- Twin-head pump.
- Two to four single-head pumps connected in parallel. The pumps must be of the same type and size. Each pump requires a non-return valve in series with the pump.

Set the control mode to "Const. pressure" or "Const. curve".

Control options

Communication with the pumps is possible via a central building management system, Grundfos GO or control panel.

The purpose of controlling TPE2 pumps is to monitor and control the pressure, temperature, flow rate and liquid level of the system.

For further information on control options of TPE2 pumps, see page 124.

11. TPE3

Fig. 25 TPE3 and TPE3 D pumps

Technical data

Flow rate:	Up to 120 m^3/h
Head:	Up to 25 m
Liquid temperature:	-25 to +120 °C (140 °C for a short period)
Maximum operating pressure:	16 bar
Motor sizes, single-phase:	0.25 to 1.5 kW
Motor sizes, three-phase:	0.25 to 2.2 kW

Construction

The pumps have built-in differential-pressure and temperature sensor.

The permanent-magnet motor has a built-in frequency converter for continuous adjustment of the pressure to the flow rate. All pumps are fitted with Grundfos permanent-magnet MGE motors that have motor efficiency class IE5 according to IEC 60034-30-2.

The range is a preset solution for quick and safe installation.

The pump has a colour display for easy and intuitive pump setup and with full access to all functions.

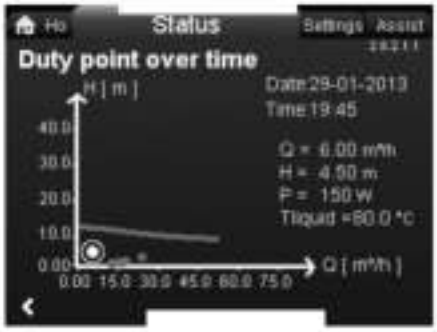

Fig. 26 Example of status display for TPE3 pumps

The pumps are available as single-head, TPE3, and twin-head, TPE3 D, pumps.

The pumps have PN 6, PN 10 or PN 16 flanges.

The pumps are fitted with an unbalanced mechanical shaft seal.

The power head (motor, pump head and impeller) and pump housing are held together by a specially designed clamp. The clamp allows for fast repositioning of the pump housing and fast service of the pump.

The twin-head pumps are designed with two parallel power heads. A flap valve in the common outlet port is opened by the flow of the pumped liquid and prevents backflow of liquid into the idle pump head.

As radial and axial forces are absorbed by the fixed bearing in the motor drive-end, the pump requires no bearing.

Pumps with stainless-steel pump housing, version I, are suitable for hot water recirculation.

Materials

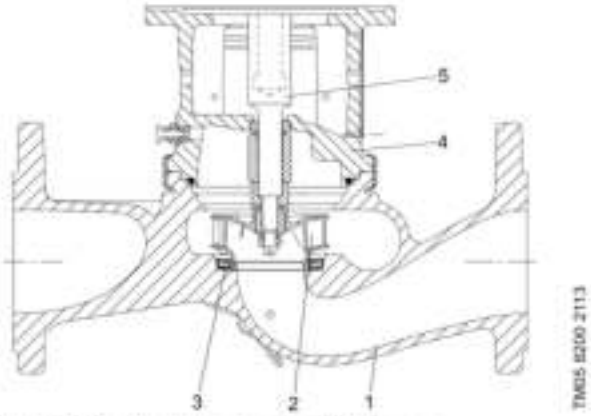

Fig. 27 Sectional drawing of a TPE3 pump

Material specification

Pos.	Component	Material	EN/DIN
1	Pump housing	Cast iron EN-GJL-250 Stainless steel	EN1561 EN 1.4308
2	Impeller	Composite PES-GF30	
3	Neck ring	Stainless steel	EN 1.4404
4	Pump head/motor stool	Cast iron EN-GJL-250 Stainless steel	EN1561 EN 1.4308
	Secondary seals	EPDM	
	Rotating seal face	Silicon carbide	
	Stationary seat	Carbon (resin-impregnated) Silicon carbide	
5	Stub shaft	Stainless steel	EN 1.4404

Applications

The pumps have integrated speed control for automatic adaptation of performance to current conditions.

The energy consumption is thus kept at a minimum.

The pumps can operate at any duty point within the range between minimum and maximum speed.

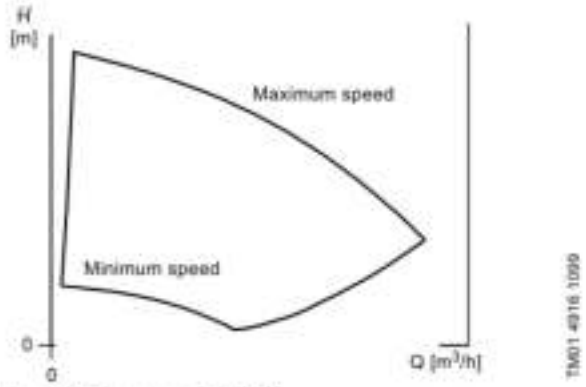

Fig. 28 Duty range of TPE3

Depending on the application, the pumps offer energy savings, increased comfort or improved processing.

The pumps are suitable for applications requiring pressure control.

AUTO$_{ADAPT}$

TPE3 pumps are factory-set to AUTO$_{ADAPT}$ which continuously adapts the pump performance according to the actual system characteristic.

System application	Select this control mode	Pump type
Recommended for most heating systems, especially in systems with relatively large pressure losses in the distribution pipes. See description under proportional pressure. In replacement situations where the proportional-pressure duty point is unknown. The duty point has to be within the "AUTO$_{ADAPT}$" operating range. During operation, the pump automatically makes the necessary adjustment to the actual system characteristics. This setting ensures minimum energy consumption and low noise level from the valves, and therefore reduces operating costs and increases comfort.	"AUTO$_{ADAPT}$" 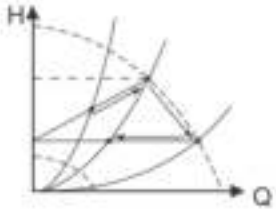	All
The FLOW$_{ADAPT}$ control mode is a combination of AUTO$_{ADAPT}$ and FLOW$_{LIMIT}$. This control mode is suitable for systems where a maximum flow rate limit, FLOW$_{LIMIT}$, is desired. The pump continuously monitors and adjusts the flow rate, thus ensuring that the selected FLOW$_{LIMIT}$ is not exceeded. Main pumps in boiler applications where a steady flow through the boiler is required. No extra energy is used for pumping too much liquid into the system. In systems with mixing loops, the control mode can control the flow rate in each loop. Benefits: • Enough water for all loops at peak load conditions if each loop has been set to the right maximum flow rate. • The dimensioned flow rate for each zone, required heat energy, is determined by the flow from the pump. This value can be set precisely in the FLOW$_{ADAPT}$ control mode without the use of pump throttling valves. • When the flow rate is set lo[illegible] valve setting, the pump ramps down instead of losing energy by pumping against a balancing valve. • Cooling surfaces in air-conditioning systems operate at high pressure and low flow rate.	FLOW$_{ADAPT}$ 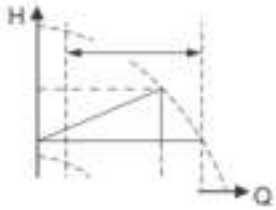	All
In systems with relatively large pressure losses in the distribution pipes and in air-conditioning and cooling systems. • Two-pipe heating systems with [illegible] d the following: – very long distribution pipes – strongly throttled pipe balancing valves – differential-pressure regulators – large pressure losses in those parts of the system through which the total quantity of water flows, for example boiler, heat exchanger and distribution pipe up to the first branching. • Primary circuit pumps in systems with large pressure losses in the primary circuit. • Air-conditioning systems with the following: – heat exchangers (fan coils) – cooling ceilings – cooling surfaces.	Proportional pressure 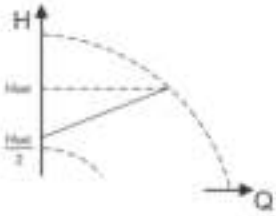	All

System application	Select this control mode	Pump type
In systems with relatively large pressure losses in the distribution pipes and in air-conditioning and cooling systems. • Two-pipe heating systems with d the following: – very long distribution pipes – strongly throttled pipe balancing valves – differential-pressure regulators – large pressure losses in those parts of the system through which the total quantity of water flows, for example boiler, heat exchanger and distribution pipe up to the first branching. • Primary circuit pumps in systems with large pressure losses in the primary circuit. • Air-conditioning systems with the following: – heat exchangers (fan coils) – cooling ceilings – cooling surfaces.	**Constant differential pressure with differential-pressure sensor located in the system** 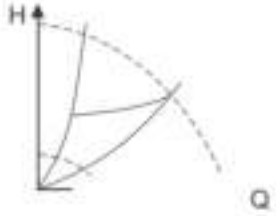	All
In systems with relatively small pressure losses in the distribution pipes. • Two-pipe heating systems with thermostatic valves and the following: – dimensioned for natural circulation – small pressure losses in those parts of the system through which the total quantity of water flows, for example boiler, heat exchanger and distribution pipe up to the first branching or modified to a high differential temperature between flow pipe and return pipe,for example district heating. • Underfloor heating systems with thermostatic valves. • One-pipe heating systems with thermostatic valves or pipe balancing valves. • Primary circuit pumps in systems with small pressure losses in the primary circuit.	**Constant differential pressure** 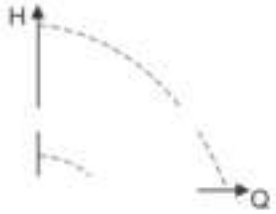	All
In pressure boosting systems.	**Constant pressure** 	All
In systems with a fixed system characteristic. Examples: • one-pipe heating systems • boiler shunts • systems with three-way valves • hot water recirculation You can use $FLOW_{LIMIT}$ to control the maximum circulation flow rate.	**Constant temperature and constant differential temperature** 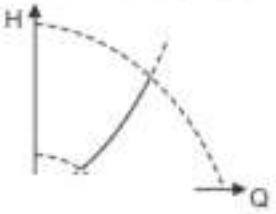	All
In systems requiring a constant flow rate, independently of pressure drop. Examples: • chillers for air-conditioning • heating surfaces • cooling surfaces.	**Constant flow rate** 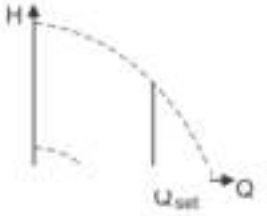	All
In systems requiring a constant tank level, independently of the flow rate. Examples: • process water tanks • boiler condensate tanks.	**Constant level** 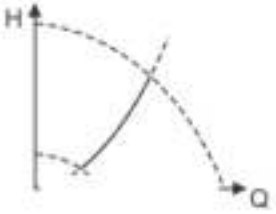	All
In systems with pumps operating in parallel. The multipump function enables the control of single-head pumps connected in parallel (two to four pumps) and twin-head pumps without the use of external controllers. The pumps in a multipump system communicate with each other via the wireless GENIair connection or the wired GENI connection.	**"Assist" menu "Multipump setup"**	All

Multipump system

The multipump function enables the control of two pumps connected in parallel without the use of external controllers. The pumps in a multipump system communicate with each other via the wireless GENIair connection or the wired GENI connection.

A multipump system is set via a selected pump, that is the master pump, which is the first selected pump. If two pumps in the system are configured with an outlet-pressure sensor, both pumps can function as master pumps and take over the master pump function if the other fails. This provides additional redundancy in the multipump system.

The multipump functions are described in the following sections.

Alternating operation

Alternating operation functions as a duty-standby operating mode and is possible with two pumps of e size and type connected in parallel. The main purpose of the function is to ensure an even amount of running hours and to ensure that the standby pump takes over if the running pump stops due to an alarm.

Each pump requires a non-return valve in series with the pump.

You can choose between two alternating operation modes:

- Alternating operation, time
  Pump changeover to the other is based on time.
- Alternating operation, energy
  Pump changeover to the other is based on energy consumption.
  If the duty pump fails, the other pump takes over automatically.
  Only one pump is operating at a time. The change from one pump to the other depends on time or energy. If a pump fails, the other pump takes over automatically.

Pump system:

- Twin-head pump.
- Two single-head pumps connected in parallel.
  The pumps must be of the same type and size.
  Each pump requires a non-return valve in series with the pump.

Backup operation

Backup operation is possible with two pumps of same size and type connected in parallel. Each pump requires a non-return valve in series with the pump.

One pump is operating continuously. The backup pump is operated for a short time each day to prevent seizing up. If the duty pump stops due to a fault, the backup pump starts automatically.

Pump system:

- Twin-head pump.
- Two single-head pumps connected in parallel.
  The pumps must be of the same type and size.
  Each pump requires a non-return valve in series with the pump.

Cascade operation

Cascade operation ensures that the pump performance is automatically adapted to the consumption by switching pumps on or off. The system thus runs as energy-efficiently as possible with a constant pressure and a limited number of pumps. When a twin-head pump is running in constant-pressure control mode, the second pump head starts at 90 % and stops at 50 % performance. All pumps in operation run at equal speed. Pump changeover is automatic and depends on energy, operating hours and fault.

Pump system:

- Twin-head pump.
- Two to four single-head pumps connected in parallel.
  The pumps must be of the same type and size.
  Each pump requires a non-return valve in series with the pump.
  Set the control mode to "Const. pressure" or "Const. curve".

Control options

Communication with the pumps is possible via the control panel, Grundfos GO or a central building management system.

The purpose of controlling the pumps is to monitor and control the pressure, temperature, flow rate of the system.

For further information on control options of the pumps, see page 124.

12. User interfaces for TPE pumps 0.12 - 22 kW, 2-pole and 0.12 - 18.5 kW, 4-pole

You can make pump settings by means of the following user interfaces:

Control panels

- TPE2 and TPE Series 1000 pumps, 0.12 - 11 kW, 2-pole and 0.12 - 7.5 kW, 4-pole. See page 48.
- TPE Series 1000 pumps, 15-22 kW, 2-pole and 11 - 18.5 kW, 4-pole. See page 50.
- TPE Series 2000 pumps, 15-22 kW, 2-pole and 11 - 18.5 kW, 4-pole. See page 51.
- Advanced control panel for TPE3 and TPE Series 2000 pumps, 0.12 - 11 kW, 2-pole and 0.12 - 7.5 kW, 4-pole. See page 53.

Remote controls

- Grundfos GO.
  See *Grundfos GO* on page 58.

If the power supply to the pump is switched off, the settings will be stored.

Control panel for TPE2 and TPE Series 1000 pumps, 0.12 - 11 kW, 2-pole and 0.12 - 7.5 kW, 4-pole

Pump variant		Fitted as standard	Option
TPE3, TPE3 D			-
TPE2, TPE2 D		-	
TPE Series 2000	0.12 - 11 kW, 2-pole	-	-
	0.12 - 7.5 kW, 4-pole		
	15-22 kW, 2-pole	-	-
	11 - 18.5 kW, 4-pole		
TPE Series 1000	0.12 - 11 kW, 2-pole	•	-
	0.12 - 7.5 kW, 4-pole		
	15-22 kW, 2-pole	-	-
	11 - 18.5 kW, 4-pole		

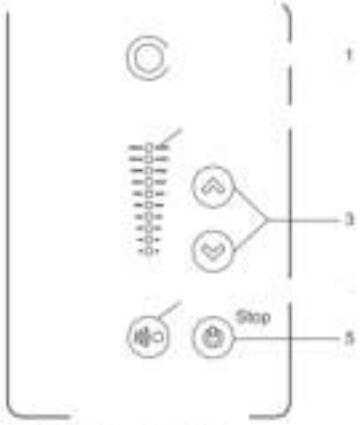

Fig. 29 Standard control panel

Pos.	Symbol	Description
1		Grundfos Eye The indicator light shows the operating status of the pump. See page 97 for further information.
2		Light fields for indication of setpoint.
3		Up and down. The buttons change the setpoint.
4		The button allows radio communication with Grundfos GO and other products of the same type. When you try to establish radio communication between the pump and Grundfos GO or another pump, the green indicator light in Grundfos Eye flashes continuously. Press on the pump control panel to allow radio communication with Grundfos GO and other products of the same type.
5		The button makes the pump ready for operation and starts and stops the pump. **Start:** If you press the button when the pump is stopped, the pump only starts if no other functions with higher priority have been enabled. **Stop:** If you press the button when the pump is running, the pump always stops. The "Stop" text next to the button is on.

Setpoint setting

Set the desired setpoint of the pump by pressing or . The light fields on the control panel indicates the setpoint set.

Pump in differential-pressure control mode

The following example applies to a pump in an application where a pressure sensor gives a feedback to the pump. If you retrofit the sensor to the pump, set it manually as the pump does not automatically register a connected sensor.

Figure 30 shows that light fields 5 and 6 are activated, indicating a desired setpoint of 3 m with a sensor measuring range from 0 to 6 m. The setting range is equal to the sensor measuring range.

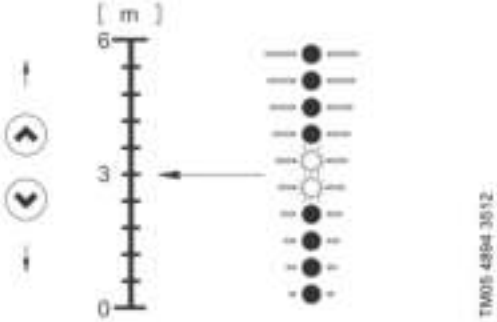

Fig. 30 Setpoint set to 3 m, differential-pressure control

Pump in constant-curve control mode

In constant-curve control mode, the pump performance is between the maximum and minimum curve of the pump. See fig. 31.

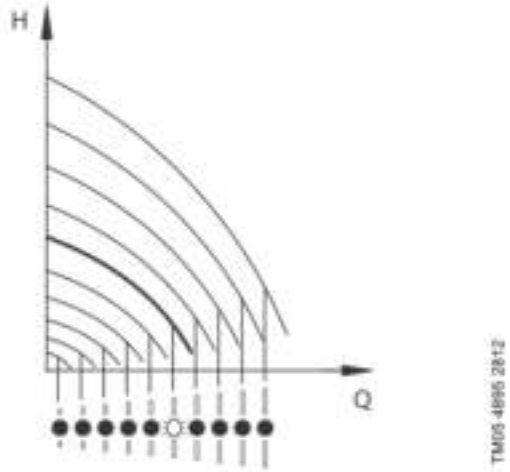

Fig. 31 Pump in constant-curve control mode

Setting to maximum curve:

- Press continuously to change over to the maximum curve of the pump. The top light field flashes. When the top light field is on, press for 3 seconds until the light field starts flashing.
- To change back, press continuously until the desired setpoint is indicated.

Example: Pump set to maximum curve.

Figure 32 shows that the top light field is flashing, indicating maximum curve.

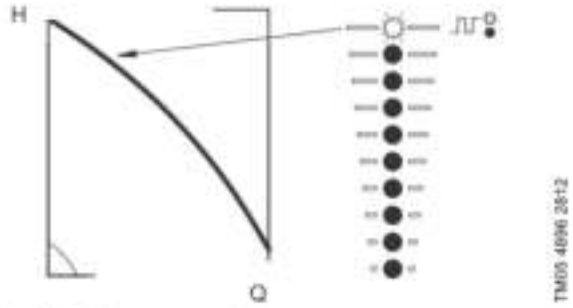

Fig. 32 Maximum curve duty

Setting to minimum curve:

- Press continuously to change over to the minimum curve of the pump. The bottom light field flashes. When the bottom light field is on, press for 3 seconds until the light field starts flashing.
- To change back, press continuously until the light field starts flashing.

Example: Pump set to minimum curve.

Figure 33 shows that the bottom light field is flashing, indicating minimum curve.

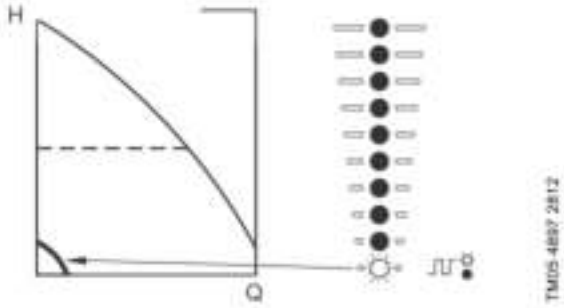

Fig. 33 Minimum curve duty

Start and stop of pump

Note: If you have stopped the pump by pressing and the "Stop" text on the control panel is on, you can only give it free to operation by pressing again.

If you have stopped the pump by pressing , you can restart it by pressing or by using Grundfos GO.

Start the pump by pressing or by continuously pressing until the desired setpoint is indicated.

Stop the pump by pressing . When the pump is stopped, the "Stop" text next to the button will illuminate. You can also stop the pump by continuously pressing until none of the light fields are on.

You can also stop the pump with Grundfos GO or via a digital input set to "External stop".

Resetting of fault indications

Reset a fault indication in one of the following ways:

- Via the digital input if it has been set to "Alarm resetting".
- Briefly press or on the pump. This will not change the setting of the pump.
  You cannot reset a fault indication by pressing or if the buttons have been locked.
- Switch off the power supply until the indicator lights are off.
- Switch the external start-stop input off and then on again.
- With Grundfos GO.

Control panel for TPE Series 1000 pumps, 15-22 kW, 2-pole and 11 - 18.5 kW, 4-pole

Pump variant		Fitted as standard	Option
TPE3, TPE3 D		-	-
TPE2, TPE2 D		-	-
TPE Series 2000	0.12 - 11 kW, 2-pole 0.12 - 7.5 kW, 4-pole	-	-
	15-22 kW, 2-pole 11 - 18.5 kW, 4-pole	-	-
TPE Series 1000	0.12 - 11 kW, 2-pole 0.12 - 7.5 kW, 4-pole	-	-
	15-22 kW, 2-pole 11 - 18.5 kW, 4-pole	•	-

The control panel incorporates the following buttons and indicator lights:

- buttons, ⊛ and ⊛, for setpoint setting
- light fields, yellow, for setpoint indication
- indicator lights, green (operation) and red (fault).

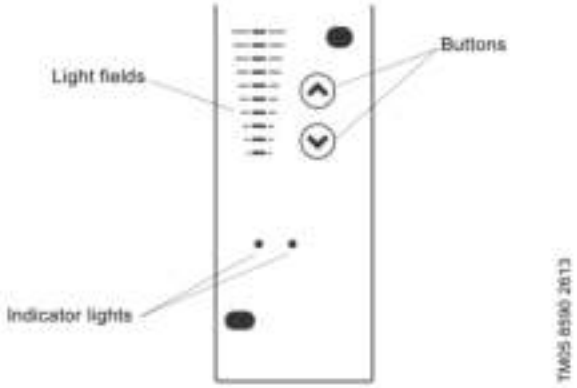

Fig. 34 Control panel for TPE Series 1000 pumps, 15-22 kW, 2-pole and 11 - 18.5 kW, 4-pole

Setpoint setting

Note: You can only set the setpoint when the operating mode is "Normal".

Set the desired setpoint by pressing ⊛ or ⊛.

The light fields on the control panel indicates the setpoint set.

Control mode "Differential-pressure control"

Example

Figure 35 shows that light fields 5 and 6 are activated, indicating a desired setpoint of 3.4 m. The sensor measuring range is 0 to 6 m. The setting range is equal to the sensor measuring range. See the sensor nameplate.

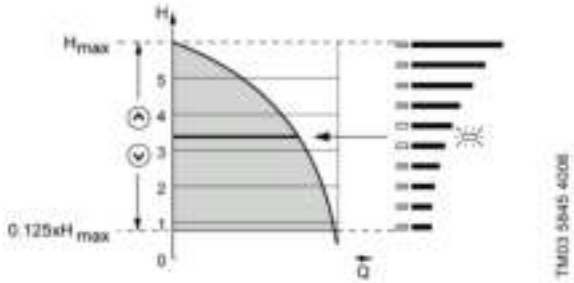

Fig. 35 Setpoint set to 3.4 m, control mode "differential-pressure control"

Control mode "Constant curve"

Example

In this control mode, the pump performance is set within the range from minimum to maximum curve. See fig. 36.

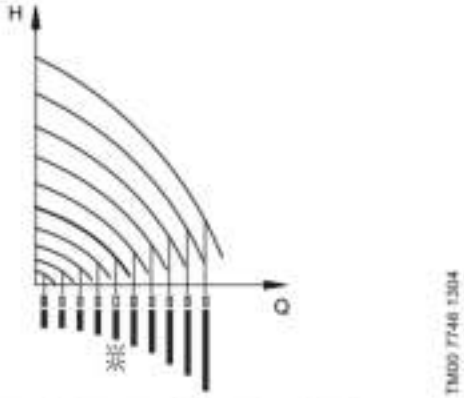

Fig. 36 Pump performance setting, control mode "Constant curve"

Setting to maximum curve duty

Press ⊛ continuously to change to the maximum curve of the pump. The top light field flashes. See fig. 37.

To change back, press ⊛ continuously until the desired setpoint is indicated.

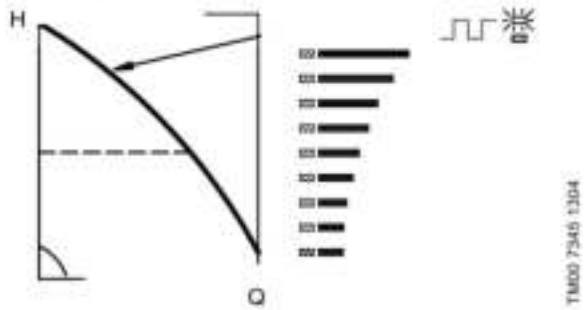

Fig. 37 Maximum curve duty

Setting to minimum curve duty

Press ⊛ continuously to change to the minimum curve of the pump. The bottom light field flashes. See fig. 38.

To change back, press ⊛ continuously until the desired setpoint is indicated.

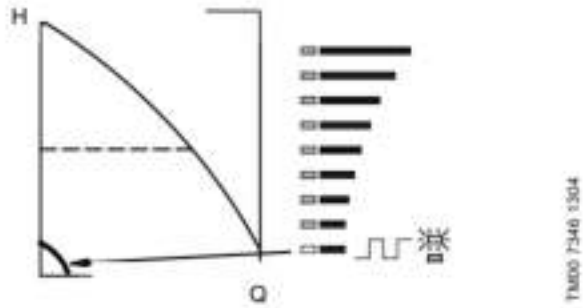

Fig. 38 Minimum curve duty

Start-stop of pump

Press ⊛ continuously until the desired setpoint is indicated to start the pump.

Stop the pump by continuously pressing ⊛ until none of the light fields are activated and the green indicator light flashes.

Control panel for TPE Series 2000 pumps, 15-22 kW, 2-pole and 11 - 18.5 kW, 4-pole

Pump variant		Fitted as standard	Option
TPE3, TPE3 D			-
TPE2, TPE2 D			-
TPE Series 2000	0.12 - 11 kW, 2-pole 0.12 - 7.5 kW, 4-pole	-	-
	15-22 kW, 2-pole 11 - 18.5 kW, 4-pole	•	-
TPE Series 1000	0.12 - 11 kW, 2-pole 0.12 - 7.5 kW, 4-pole	-	-
	15-22 kW, 2-pole 11 - 18.5 kW, 4-pole	-	-

The pump control panel incorporates the following buttons and indicator lights. See fig. 39:

- buttons, ⊛ and ⊛, for setpoint setting
- light fields, yellow, for indication of setpoint
- indicator lights, green (operation) and red (fault).

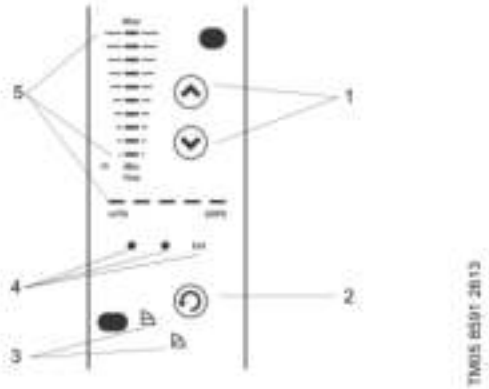

Fig. 39 Control panel, TPE Series 2000 pumps, 15-22 kW, 2-pole and 11 - 18.5 kW, 4-pole

Pos.	Description
1 and 2	Buttons for setting
3 and 5	Light fields for indication of: • control mode (3) • head, performance and operating mode (5).
4	Indicator lights for indication of: • operation and fault • external control, EXT.

Setting of control mode

Change the control mode by pressing (2) according to the following cycle:

- constant differential pressure,
- proportional pressure,

Fig. 40 Setting the control mode

Setting of pump head

Set the pump head by pressing or .

The light fields on the control panel will indicate the head set, setpoint. See the following examples.

Proportional pressure

Figure 41 shows that light fields 5 and 6 are activated, indicating a desired head of 3.4 m at maximum flow rate. The setting range is between 25 and 90 % of maximum head.

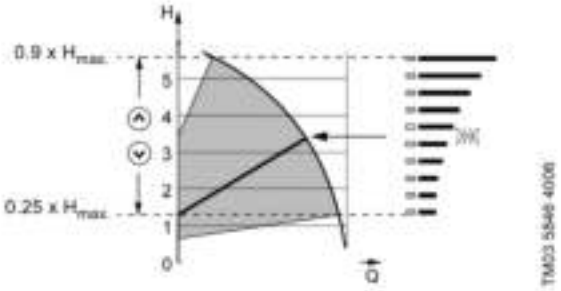

Fig. 41 Pump in "Proportional-pressure" control mode

Constant differential pressure

Figure 42 shows that light fields 5 and 6 are activated, indicating a desired head of 3.4 m. The setting range is between 1/8, 12.5 %, of maximum head and maximum head.

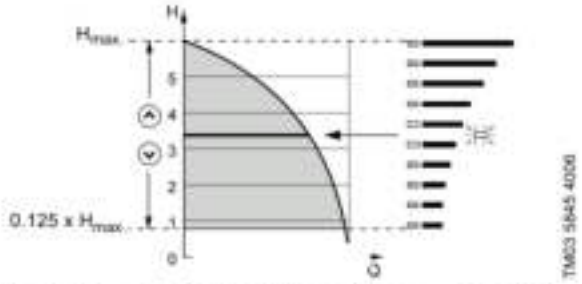

Fig. 42 Pump in "Constant differential pressure" control mode

Setting to maximum curve duty

Press continuously to change to the maximum curve of the pump and MAX illuminates. See fig. 43.

To change back, press continuously until the desired head is indicated.

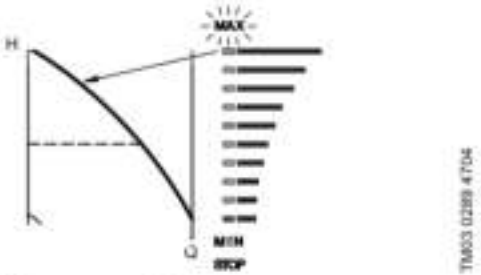

Fig. 43 Maximum curve duty

Setting to minimum curve duty

Press continuously to change to the minimum curve of the pump and MIN illuminates. See fig. 44.

To change back, press continuously until the desired head is indicated.

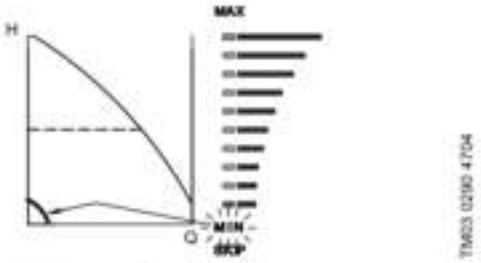

Fig. 44 Minimum curve duty

Start-stop of pump

Press continuously until the desired head is indicated to start the pump.

- Press continuously until STOP is on and the green indicator light flashes to stop the pump.

Advanced control panel for TPE3 and TPE Series 2000 pumps, 0.12 - 11 kW, 2-pole and 0.12 - 7.5 kW, 4-pole

Pump variant		Fitted as standard	Option
TPE3, TPE3 D		-	
TPE2, TPE2 D			-
TPE Series 2000	0.12 - 11 kW, 2-pole 0.12 - 7.5 kW, 4-pole	•	-
	15-22 kW, 2-pole 11 - 18.5 kW, 4-pole	-	-
TPE Series 1000	0.12 - 11 kW, 2-pole 0.12 - 7.5 kW, 4-pole	-	•
	15-22 kW, 2-pole 11 - 18.5 kW, 4-pole	-	-

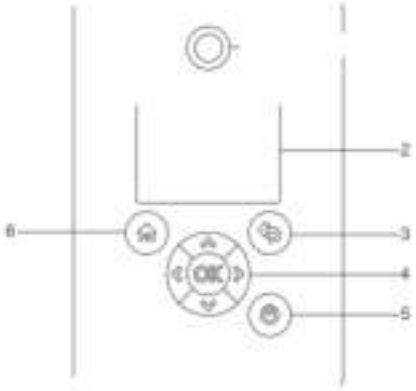

Fig. 45 Advanced control panel

Pos.	Symbol	Description
1		Grundfos Eye The indicator light shows the operating status of the pump. See *Priority of settings* on page 97 for further information.
-		Graphical colour display.
3		Press the button to go one step back.
		Press the button to navigate between main menus, displays and digits. When you change the menu, the display always shows the top display of the new menu.
4		Press the buttons to navigate between submenus or change value settings. **Note:** If you have disabled the possibility to make settings with the "Enable/disable settings" function, then you can enable it again temporarily by pressing these buttons simultaneously for at least 5 seconds. See *"Buttons on product" ("Enable/disable settings")* on page 88.
	OK	Press the button to save changed values, reset alarms and expand the value field. The button enables radio communication with Grundfos GO and other products of the same type. When you try to establish between the pump and Grundfos GO or another pump, the green indicator light in Grundfos Eye flashes. A note also appears in the pump display stating that a wireless device wants to connect to the pump. Press OK on the pump control panel to allow radio communication with Grundfos GO and other products of the same type.
5		Press the button to make the pump ready for operation and starts and stops the pump. **Start:** If you press the button when the pump is stopped, the pump will only start if no other functions with higher priority have been enabled. **Stop:** If you press the button when the pump is running, the pump is always stopped. When you stop the pump via this button, the icon appears in the bottom of the display.
6		Press the button to go to the "Home" menu.

"Home" display

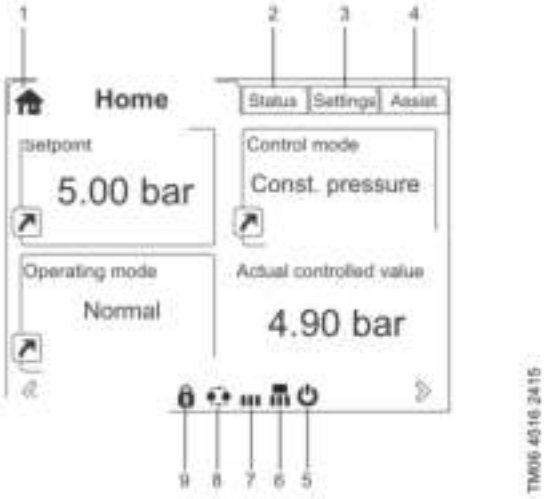

Fig. 46 Example of "Home" display

Pos.	Symbol	Description
1		"Home" This menu shows up to four user-defined parameters. You can select parameters shown as shortcut icon, and when pressing OK you go directly to the "Settings" display for the selected parameter.
2	-	"Status" This menu shows the status of the pump and system as well as warnings and alarms.
3	-	"Settings" This menu gives access to all setting parameters. You can make detailed settings of the pump in this menu. See *Description of selected functions* on page 45
4	-	"Assist" This menu enables "Assisted Pump Setup", provides a short description of the control modes and offers fault advice. See *"Assist"* on page 91.
5		This symbol indicates that the pump has been stopped via the button.
6		This symbol indicates that the pump is functioning as master pump in a multipump system.
7		This symbol indicates that the pump is functioning as a slave pump in a multipump system.
8		This symbol indicates that the pump is operating in a multipump system. See *"Multipump setup" ("Setup of multi-pump system")* on page 93.
9		This symbol indicates that the possibility to make settings has been disabled for protective reasons. See *"Buttons on product" ("Enable/disable settings")* on page 88.

Startup guide

The pump incorporates a startup guide which is started at the first startup. See *"Run startup guide"* on page 91. After the startup guide, the main menus appear in the display.

Menu overview for advanced control panel

Main menus

Home	PE3, TPE3 D	TPE2, TPE2 D	TPE Series 2000 0.12 - 11 kW, 2-pole 0.12 - 7.5 kW, 4-pole	TPE Series 1000 0.12 - 11 kW, 2-pole 0.12 - 7.5 kW, 4-pole	Multipump system[2]
	•	•	•	•	•

Status	PE3, TPE3 D	TPE2, TPE2 D	TPE Series 2000 0.12 - 11 kW, 2-pole 0.12 - 7.5 kW, 4-pole	TPE Series 1000 0.12 - 11 kW, 2-pole 0.12 - 7.5 kW, 4-pole	Multipump system[2]	Section	Page
"Operating status"	•	•[1]	•	•[1]	•		
"Operating mode, from	•	•[1]	•	•[1]	•		
"Control mode"	•	•[1]	•	•[1]	•		
"Pump performance"	•	•[1]	•	•[1]	•		
"Actual controlled value	•	•[1]	•	•[1]	•		
"Max. curve and duty point"	•				•		
"Resulting setpoint"	•	•[1]	•	•[1]	•		
"Liquid temperature"	•				•		
"Speed"	•	•[1]	•	•[1]	•		
"Acc. flow, specific energy	•	•[1]	•	•[1]	•		
"Power and energy consumption"	•	•[1]	•	•[1]	•		
"Measured values"	•	•[1]	•	•[1]	•		
"Analog input 1"	•	•[1]	•	•[1]	•		
"Analog input 2"	•	•[1]	•	•[1]	•		
"Analog input 3"	•	•[1]	•	•[1]	•		
"Pt100/1000 input 1"	•	•[1]	•	•[1]	•		
"Pt100/1000 input 2"	•	•[1]	•	•[1]	•		
"Analog output"	•	•[1]	•	•[1]	•		
"Warning and alarm	•	•[1]	•	•[1]	•		
"Actual warning and alarm	•	•[1]	•	•[1]	•		
"Warning log"	•	•[1]	•	•[1]	•		
"Alarm log"	•	•[1]	•	•[1]	•		
"Heat energy monitor"	•				•	*Heat energy monitor*	62
"Heat power"	•				•		
"Heat energy"	•				•		
"Flow rate"	•				•		
"Volume"	•				•		
"Hour counter	•				•		
"Temperature 1"	•				•		
"Temperature 2"	•				•		
"Differential temp."	•				•		
"Operating log"	•	•[1]	•	•[1]	•		
"Operating hours"	•	•[1]	•	•[1]	•		
"Trend data"	•				•		
"Fitted modules"	•	•[1]	•	•[1]	•		
"Date and time"	•	•[1]	•	•[1]	•		
"Product identification"	•	•[1]	•	•[1]	•		
"Motor bearing monitoring	•	•[1]	•	•[1]	•		
"Multipump system"					•		
"System operating status					•		
"System performance"					•		
"System input power and energy					•		
"Pump 1, multipump sys."					•		
"Pump 2, multipump sys."					•		
"Pump 3, multipump sys."					•		

• Available.

[1] The advanc[illegible]n on TPE2 and TPE Series 1000 pumps, 0.12 - 11 kW, 2-pole and 0.12 - 7.5 kW, 4-pole.

[2] Pumps above 11 kW, 2-pole and 7.5 kW, 4-pole have no multipump function.

Settings	TPE3, TPE3 D	TPE2, TPE2 D	TPE Series 2000 0.12 - 11 kW, 2-pole 0.12 - 7.5 kW, 4-pole	TPE Series 1000 0.12 - 11 kW, 2-pole 0.12 - 7.5 kW, 4-pole	Multipump system[2]	Section	Page
"Setpoint"	•	•[1]	•	•[1]	•	"Setpoint"	62
"Operating mode"	-	•[1]	•	•[1]	•	"Operating mode"	63
"Set manual speed"	-	-[1]	•	•[1]	•	"Set manual speed"	63
"Set user-defined speed"	-	-[1]	•	•[1]	•	"Set user-defined speed"	63
"Control mode"	-	-[1]	-	-[1]	•	"Control mode"	63
"Flow limit"	-				•	"$FLOW_{LIMIT}$"	71
"Automatic night setback"	-				•	"Automatic night setback"	71
"Analog inputs"	-	-[1]	•	•[1]	•		
"Analog input 1, setup"	•	•[1]	•	•[1]	•	"Analog inputs"	72
"Analog input 2, setup"	•	•[1]	•	•[1]	•		
"Analog input 3, setup"	•	-[1]	-	-[1]	-		
"Built-in Grundfos sensor"	•		-		-	"Built-in Grundfos sensor"	[illegible]
"Pt100/1000 inputs"	•	•[1]	•	•[1]	•		
"Pt100/1000 input 1, setup"	•	•[1]	•	•[1]	•	"Pt100/1000 inputs"	74
"Pt100/1000 input 2, setup"	•	•[1]	•	•[1]	•		
"Digital inputs"	-	•[1]	•	•[1]	•		
"Digital input 1, setup"	-	-[1]	•	•[1]	•	"Digital inputs"	74
"Digital input 2, setup"	•	•[1]	•	•[1]	-		
"Digital inputs/outputs"	•	•[1]	•	•[1]	•		
"Digital input/output 3, setup"	-	•[1]	•	•[1]	•	"Digital inputs/outputs"	76
"Digital input/output 4, setup"	-	•[1]	•	-[1]	-		
"Relay outputs"	-	•[1]	•	•[1]	•		
"Relay output 1"	-	•[1]	•	•[1]	•	"Signal relays 1 and 2" ("Relay outputs")	77
"Relay output 2"	•	•[1]	•	•[1]	•		
"Analog output"	-	•[1]	•	•[1]	•		
"Output signal"	•	•[1]	•	•[1]	•	"Analog output"	78
"Function of analog output"	•	•[1]	•	•[1]	-		
"Controller settings"	-	-[1]	•	•[1]	•	"Controller" ("Controller settings")	79
"Operating range"	-	•[1]	•	•[1]	•	"Operating range"	80
"Setpoint influence"	•	•[1]	•	•[1]	•	"Setpoint influence"	82
"External setpoint function"	•	•[1]	•	•[1]	•	"External setpoint influence"	81
"Predefined setpoints"	-	-[1]	-	-[1]	-	"Predefined setpoints"	83
"Temperature influence"	-				•	"Temperature influence"	83
"Monitoring functions"	•	•[1]	•	•[1]	-		
"Motor bearing monitoring"	•	•[1]	•	•[1]	•	"Motor bearing monitoring"	86
"Motor bearing maintenance"	-	•[1]	•	•[1]	•	"Bearings replaced" ("Motor bearing maintenance")	87
"Limit-exceeded function"	•	•[1]	•	•[1]	•	"Limit-exceeded function"	84
"Alarm handling"	-	•[1]	•	•[1]	•	"Alarm handling"	86
"Special functions"	•	•[1]	•	•[1]	•	Special functions	85
"Pulse flowmeter setup"	-	-[1]	•	•[1]	•	"Pulse flowmeter setup"	85
"Ramps"	-	•[1]	•	•[1]	•	"Ramps"	85
"Standstill heating"	-	•[1]	•	•[1]	•	"Standstill heating"	86
"Communication"	•	•[1]	•	•[1]	•	Communication	87
"Pump number"	-	-[1]	-	-[1]	•	"Number" ("Pump number")	87
"Enable/disable radio communication"	•	•[1]	•	•[1]	•	"Radio communication" ("Enable/disable radio comm.")	87
"General settings"	-	•[1]	•	•[1]	•	General settings	88
"Language"	-	•[1]	•	•[1]	•	"Language"	88
"Set date and time"	-	-[1]	•	•[1]	•	"Date and time"	88
"Units"	•	•[1]	•	•[1]	•	"Unit configuration" ("Units")	88
"Enable/disable settings"	•	•[1]	•	•[1]	•	"Buttons on product" ("Enable/disable settings")	88
"Delete history"	-	-[1]	•	•[1]	•	"Delete history"	89
"Define Home display"	-	•[1]	•	•[1]	•	"Define Home display"	89
"Display settings"	-	•[1]	•	•[1]	•	"Display settings"	89
"Store actual settings"	•	•[1]	•	•[1]	•	"Store settings" ("Store actual settings")	89
"Recall stored settings"	-	-[1]	•	•[1]	•	"Recall settings" ("Recall stored settings")	90
"Run startup guide"	-	-[1]	-	-[1]	•	"Run startup guide"	91

[1] The advanc[illegible]n on TPE2 and TPE Series 1000 pumps, 0.12 - 11 kW, 2-pole and 0.12 - 7.5 kW, 4-pole.

[2] Pumps above 11 kW, 2-pole and 7.5 kW, 4-pole have

Assist	TPE3, TPE3 D	TPE2, TPE2 D	TPE Series 2000 0.12 - 11 kW, 2-pole 0.12 - 7.5 kW, 4-pole	TPE Series 1000 0.12 - 11 kW, 2-pole 0.12 - 7.5 kW, 4-pole	Multipump system[1]	Section	Page
"Assisted pump setup"	•	•	•	•	•	"Assisted pump setup"	92
"Setup, analog input"	•	•	•	•	•	"Setup, analog input"	92
"Setting of date and time"	•	•	•	•	•	"Date and time"	98
"Multipump setup"	•	•	•	•	•	"Multipump setup" ("Setup of multi-pump system")	93
"Description of control mode"	•	•	•	•	•	"Description of control mode"	96
"Assisted fault advice"	•	•	•	•	•	"Assisted fault advice"	96

[1] Pumps above 11 kW, 2-pole and 7.5 kW, 4-pole have

Grundfos GO

The pump is designed for wireless radio or infrared communication with Grundfos GO.

Grundfos GO enables setting of functions and gives access to status overviews, technical product information and actual operating parameters.

Grundfos GO offers the following mobile interface, MI.

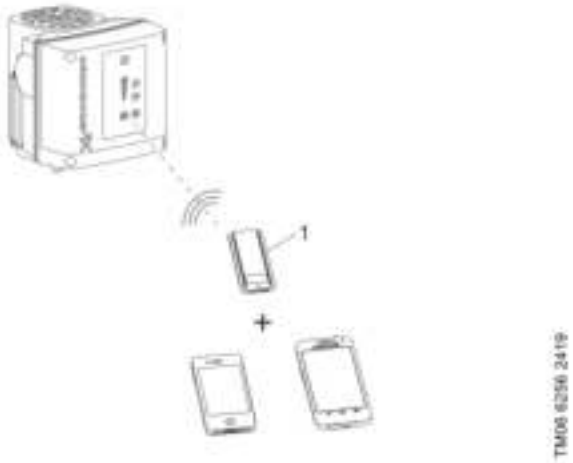

Fig. 47 Grundfos GO communicating with the pump via radio or infrared connection, IR

Pos.	Description
1	Grundfos MI 301: Separate module enabling radio or ir/ You can use the module in conjunction with an Android or iOS-based smart device with Bluetooth connection.

Communication

When Grundfos GO initiates communication with the pump, the indicator light in the middle of Grundfos Eye flashes green. See *Grundfos Eye* on page 98.

Furthermore, on pumps fitted with an advanced control panel a text appears in the display saying that a wireless device is trying to establish connection. Press OK on the pump in order to establish connection with Grundfos GO or press 🏠 to reject connection.

Establish communication using one of these communication types:

- radio communication
- infrared communication.

Radio communication

Radio communication can take place at distances up to 30 metres. The first time Grundfos GO communicates with the pump, you must enable communication by pressing ⊲ or OK on the pump control panel. Later when communication takes place, the pump is recognized by Grundfos GO and you can select the pump from the "List" menu.

Infrared communication

When communicating via infrared light, Grundfos GO must be pointed at the pump control panel.

Menu overview for Grundfos GO

Main menus

Dashboard	PE3, TPE3 D	TPE2, TPE2 D	TPE Series 2000 0.12 - 11 kW, 2-pole 0.12 - 7.5 kW, 4-pole	TPE Series 2000 15-22 kW, 2-pole 11 - 18.5 kW, 4-pole	TPE Series 1000 0.12 - 11 kW, 2-pole 0.12 - 7.5 kW, 4-pole	TPE Series 1000 15-22 kW, 2-pole 11 - 18.5 kW, 4-pole	fullpump system[1]
	•	•	•	•	•	•	•

Status	PE3, TPE3 D	TPE2, TPE2 D	TPE Series 2000 0.12 - 11 kW, 2-pole 0.12 - 7.5 kW, 4-pole	TPE Series 2000 15-22 kW, 2-pole 11 - 18.5 kW, 4-pole	TPE Series 1000 0.12 - 11 kW, 2-pole 0.12 - 7.5 kW, 4-pole	TPE Series 1000 15-22 kW, 2-pole 11 - 18.5 kW, 4-pole	fullpump system[1]	Section	Page
"System mode"							•		
"Resulting setpoint"	•	•	•		•				
"Resulting system setpoint"							•		
"Actual setpoint"				•		•			
"External setpoint"				•		•			
"Actual controlled value"	•	•	•		•		•		
"Sensor value"				•		•			
"Motor speed (rpm, %)"	•	•	•	•	•	•			
"Power consumption"	•	•	•	•	•	•			
"Power consumption, system"							•		
"Energy consumption"	•	•	•	•	•	•			
"Energy consumption, system"							•		
"Acc. flow, specific energy"	•	•	•		•		•		
"Operating hours, system"							•		
"Operating hours"	•	•	•	•	•	•			
"Motor current"	•	•	•	•	•	•	•		
"Number of starts"	•	•	•	•	•	•	•		
"Liquid temperature"	•								
"Analog input 1"	•	•	•		•				
"Analog input 2"	•	•	•		•				
"Analog input 3"	•	•	•		•				
"Pt100/1000 input 1"	•	•	•		•				
"Pt100/1000 input 2"	•	•	•		•				
"Analog output"	•	•	•		•				
"Digital input 1"	•	•	•		•				
"Digital input 2"	•	•	•	•	•	•			
"Digital in/output 3"	•	•	•		•				
"Digital in/output 4"	•	•	•		•				
"Motor bearing service"	•	•	•	•	•	•	•		
"Fitted modules"	•	•	•	•	•	•			
"Trend data"	•								
"Heat energy monitor"	•							"Heat energy monitor"	[illegible]
"Controlled from"				•		•			
"Pump1"							•		
"Pump2"							•		
"Pump3"							•		
"Pump4"							•		

[1] Pumps above 11 kW, 2-pole and 7.5 kW, 4-pole have 1.

Settings	TPE3, TPE3 D	TPE2, TPE2 D	TPE Series 2000 0.12 - 11 kW, 2-pole 0.12 - 7.5 kW, 4-pole	TPE Series 2000 15-22 kW, 2-pole 11 - 18.5 kW, 4-pole	TPE Series 1000 0.12 - 11 kW, 2-pole 0.12 - 7.5 kW, 4-pole	TPE Series 1000 15-22 kW, 2-pole 11 - 18.5 kW, 4-pole	fullfpump system[1]	Section	Page
"Setpoint"	•	•	•	•	•	•	•	"Setpoint"	62
"Operating mode"	•	•	•	•	•	•	•	"Operating mode"	63
"Set user-defined speed"	•	•	•	•	•	•	•	"Set user-defined speed"	63
"Control mode"	•	•	•	•	•	•	•	"Control mode"	63
"Proportional-pressure setup"	•		•					"Proportional-pressure setup"	71
"Flow limit"	•							"$FLOW_{LIMIT}$"	71
"Automatic night setback"	•							"Automatic night setback"	71
"Temperature influence"	•							"Temperature influence"	83
"Buttons on product"	•	•	•	•	•	•	•	"Buttons on product" ("Enable/disable settings")	88
"Controller"	•	•	•		•	•	•	"Controller" ("Controller settings")	79
"Operating range"	•	•	•		•	•	•	"Operating range"	80
"Ramps"	•	•	•		•			"Ramps"	85
"Number"	•	•	•	•	•	•		"Number" ("Pump number")	87
"I	•	•	•		•			"Radio communication" ("Enable/disable radio comm.")	87
"Sensor type"						•		"Sensor type"	71
"Analog input 1"	•	•	•		•			"Analog inputs"	72
"Analog input 2"	•	•	•		•				
"Analog input 3"	•	•	•		•				
"Built-in Grundfos sensor"	•		•					"Built-in Grundfos sensor"	73
"Pt100/1000 input 1"	•	•	•		•			"Pt100/1000 inputs"	74
"Pt100/1000 input 2"	•	•	•		•				
"Digital input 1"	•	•	•		•			"Digital inputs"	74
"Digital input 2"	•	•	•	•	•	•			
"Digital in/output 3"	•	•	•		•			"Digital inputs/outputs"	76
"Digital in/output 4"	•	•	•		•				
"Pulse flowmeter"	•	•	•		•			"Pulse flowmeter setup"	85
"Predefined setpoint"	•	•	•		•		•	"Predefined setpoints"	83
"Analog output"	•	•	•		•			"Analog output"	78
"External setpoint funct."	•	•	•	•	•	•		"External setpoint influence"	81
"Signal relay 1"	•	•	•	•	•	•		"Signal relays 1 and 2" ("Relay outputs")	77
"Signal relay 2"	•	•	•	•	•	•			
"Limit 1 exceeded"	•	•	•		•		•	"Limit-exceeded function"	84
"Limit 2 exceeded"	•	•	•		•		•		
"Sensor to be used"							•	"Sensor to be used"	[illegible]
"Alternating operation, time"							•		
"Time for pump change over"							•		
"Standstill heating"	•	•	•	•	•	•		"Standstill heating"	86
"Alarm handling"	•	•	•		•		•	"Alarm handling"	86
"Motor bearing monitoring"	•	•	•	•	•	•		"Motor bearing monitoring"	86
"Service"	•	•	•		•			"Service"	87
"Date and time"	•	•	•		•		•	"Date and time"	88
"Store settings"	•	•	•	•	•	•		"Store settings" ("Store actual settings")	89
"Recall settings"	•	•	•	•	•	•		"Recall settings" ("Recall stored settings")	90
"Undo"	•	•	•	•	•	•	•	"Undo"	90
"Pump name"	•	•	•		•		•	"Pump name"	90
"Connection code"	•	•	•		•		•	"Connection code"	90
"Unit configuration"	•	•	•		•		•	"Unit configuration" ("Units")	88

[1] Pumps above 11 kW, 2-pole and 7.5 kW, 4-pole have

Alarms and warnings	PE3, TPE3 D	TPE2, TPE2 D	TPE Series 2000 0.12 - 11 kW, 2-pole 0.12 - 7.5 kW, 4-pole	TPE Series 2000 15-22 kW, 2-pole 11 - 18.5 kW, 4-pole	TPE Series 1000 0.12 - 11 kW, 2-pole 0.12 - 7.5 kW, 4-pole	TPE Series 1000 15-22 kW, 2-pole 11 - 18.5 kW, 4-pole	Multipump system[1]	Section	Page
"Alarm log"	-	•	•		•		•	*"Alarm log"*	91
"Warning log"	-	-	-		-		•	*"Warning log"*	91
"Reset alarm" button	-	-	-		-		-		

[1] Pumps above 11 kW, 2-pole and 7.5 kW, 4-pole have

Assist	PE3, TPE3 D	TPE2, TPE2 D	TPE Series 2000 0.12 - 11 kW, 2-pole 0.12 - 7.5 kW, 4-pole	TPE Series 2000 15-22 kW, 2-pole 11 - 18.5 kW, 4-pole	TPE Series 1000 0.12 - 11 kW, 2-pole 0.12 - 7.5 kW, 4-pole	TPE Series 1000 15-22 kW, 2-pole 11 - 18.5 kW, 4-pole	Multipump system[1]	Section	Page
"Assisted pump setup"	-	•	•		•			*"Assisted pump setup"*	92
"Assisted fault advice"	-	-	-		-		•	*"Setup, analog input"*	92
"Multipump setup"	•	•	•		•		•	*"Multipump setup" ("Setup of multi-pump system")*	93

[1] Pumps above 11 kW, 2-pole and 7.5 kW, 4-pole have

Description of selected functions

"Heat energy monitor"

Pump variant		"Heat energy monitor"
TPE3, TPE3 D		-
TPE2, TPE2 D		-
TPE Series 2000	0.12 - 11 kW, 2-pole 0.12 - 7.5 kW, 4-pole	-
	15-22 kW, 2-pole 11 - 18.5 kW, 4-pole	-
TPE Series 1000	0.12 - 11 kW, 2-pole 0.12 - 7.5 kW, 4-pole	-
	15-22 kW, 2-pole 11 - 18.5 kW, 4-pole	-

The heat energy monitor is a monitoring function that calculates the heat energy consumption within a system. The built-in flow estimation needed for the calculation has an inaccuracy of ± 10 % of the maximum flow rate in the area down to 10 % flow and down to 12.5 % of the maximum head. The calculations are based on water at a temperature of 20 °C. Also, the temperature measurements needed for the calculation have some inaccuracy depending on the sensor type. Therefore, you cannot use the heat energy value for billing purposes. However, the value is perfect for optimisation purposes in order to prevent excessive energy costs caused by system imbalances.

The heat energy monitor requires an additional temperature sensor installed in the flow pipe or return pipe depending on where the pump is installed.

Use the analog inputs and/or Pt100/1000 inputs for measuring the temperatures used for calculation by the heat energy monitor.

The used inputs must not be set to "Not active" and one of the measuring parameters must be set to "Temperature 2".

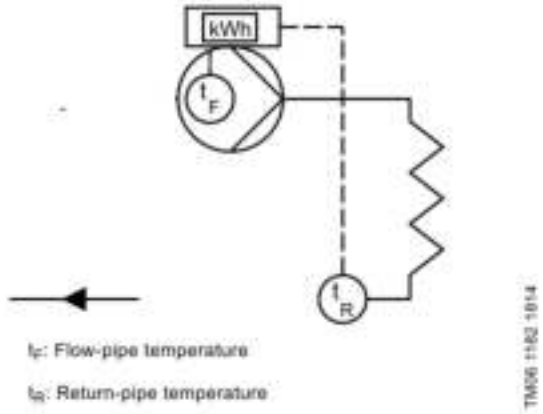

Fig. 48 Example: Pump installed in the flow pipe and additional temperature sensor installed in the return pipe

"Setpoint"

Pump variant		"Setpoint"
TPE3, TPE3 D		-
TPE2, TPE2 D		-
TPE Series 2000	0.12 - 11 kW, 2-pole 0.12 - 7.5 kW, 4-pole	•
	15-22 kW, 2-pole 11 - 18.5 kW, 4-pole	•
TPE Series 1000	0.12 - 11 kW, 2-pole 0.12 - 7.5 kW, 4-pole	•
	15-22 kW, 2-pole 11 - 18.5 kW, 4-pole	•

You can set the setpoint for all control modes, except $AUTO_{ADAPT}$ and $FLOW_{ADAPT}$, in this submenu when you have selected the desired control mode. See *"Control mode"* on page 63.

Factory setting

See *14. Factory settings of E-pumps* on page 122.

"Operating mode"

Pump variant		"Operating mode"
TPE3, TPE3 D		-
TPE2, TPE2 D		-
TPE Series 2000	0.12 - 11 kW, 2-pole 0.12 - 7.5 kW, 4-pole	•
	15-22 kW, 2-pole 11 - 18.5 kW, 4-pole	•
TPE Series 1000	0.12 - 11 kW, 2-pole 0.12 - 7.5 kW, 4-pole	•
	15-22 kW, 2-pole 11 - 18.5 kW, 4-pole	•

Possible operating modes:

- "Normal"
  The pump runs according to the selected control mode.
- "Stop"
  The pump stops.
- "Min."
  Use the minimum-curve mode in periods in which a minimum flow is required.
  This operating mode is for instance suitable for manual night setback if you do not want to use automatic night setback.
- "Max."
  Use the maximum-curve mode in periods in which a maximum flow is required.
  This operating mode is for instance suitable for hot-water priority.
- "Manual"
  The pump is operating at a manually set speed.
  In "Manual" the setpoint via bus is overruled. See *"Set manual speed"* on page 63.
- "User-defined speed"
  The motor is operating at a speed set by the user.
  See *"Set user-defined speed"* on page 63.

All operating modes are illustrated in the fig. 49.

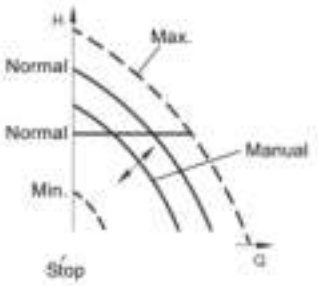

Fig. 49 Operating modes

Factory setting

See *14. Factory settings of E-pumps* on page 122.

"Set manual speed"

Pump variant		"Set manual speed"
TPE3, TPE3 D		-
TPE2, TPE2 D		-
TPE Series 2000	0.12 - 11 kW, 2-pole 0.12 - 7.5 kW, 4-pole	•
	15-22 kW, 2-pole 11 - 18.5 kW, 4-pole	-
TPE Series 1000	0.12 - 11 kW, 2-pole 0.12 - 7.5 kW, 4-pole	•
	15-22 kW, 2-pole 11 - 18.5 kW, 4-pole	-

This menu is only available in the advanced control panel. With Grundfos GO, you set the speed via the "Setpoint" menu.

You can set the pump speed in % of the maximum speed. When you have set the operating mode to "Manual", the pump starts running at the set speed. The speed can then be changed manually via Grundfos GO or via the advanced control panel.

"Set user-defined speed"

You can set the motor speed in % of the maximum speed. When you have set the operating mode to "User-defined speed", the motor runs at the set speed.

"Control mode"

Pump variant		"Control mode"
TPE3, TPE3 D		-
TPE2, TPE2 D		-
TPE Series 2000	0.12 - 11 kW, 2-pole 0.12 - 7.5 kW, 4-pole	•
	15-22 kW, 2-pole 11 - 18.5 kW, 4-pole	•
TPE Series 1000	0.12 - 11 kW, 2-pole 0.12 - 7.5 kW, 4-pole	•
	15-22 kW, 2-pole 11 - 18.5 kW, 4-pole	•

Note: Not all control modes are available for all pump variants.

Possible control modes:

- "AUTO$_{ADAPT}$"
- "FLOW$_{ADAPT}$"
- "Prop. press." (proportional pressure)
- "Const. pressure" (constant pressure)
- "Const. temp." (constant temperature)
- "Con. diff. press." (constant differential pressure)
- "Con. diff. temp." (constant differential temperature)
- "Const. flow rate" (constant flow rate)
- "Const. level" (constant level)
- "Const. other val." (constant other value)
- "Const. curve" (constant curve).

You can change the setpoint for all control modes, except AUTO$_{ADAPT}$ and FLOW$_{ADAPT}$, in the "Setpoint" submenu under "Settings" when you have selected the desired control mode.

Factory setting

See *14. Factory settings of E-pumps* on page 122.

"AUTO$_{ADAPT}$"

Pump variant		"AUTO$_{ADAPT}$"
TPE3, TPE3 D		-
TPE2, TPE2 D		-
TPE Series 2000	0.12 - 11 kW, 2-pole 0.12 - 7.5 kW, 4-pole	-
	15-22 kW, 2-pole 11 - 18.5 kW, 4-pole	-
TPE Series 1000	0.12 - 11 kW, 2-pole 0.12 - 7.5 kW, 4-pole	-
	15-22 kW, 2-pole 11 - 18.5 kW, 4-pole	-

The AUTO$_{ADAPT}$ control mode continuously adapts the pump performance according to the actual system characteristic.

Manual setting of the setpoint is not possible.

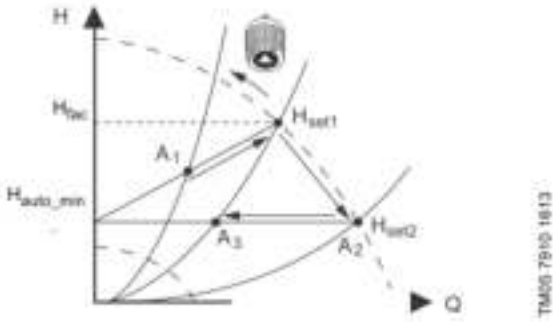

Fig. 50 AUTO$_{ADAPT}$

When the AUTO$_{ADAPT}$ control mode has been enabled, the pump will start with the factory setting, H_{fac} is equal to H_{set1}, and then adjust its performance to A_1. See fig. 50.

When the pump registers a lower head on the maximum curve, A_2, the AUTO$_{ADAPT}$ function automatically selects a correspondingly lower control curve, H_{set2}. If the valves in the system close, the pump adjusts its performance to A_3.

A_1: Original duty point.

A_2: Lower registered head on the maximum curve.

A_3: New duty point after AUTO$_{ADAPT}$ control.

H_{set1}: Original setpoint setting.

H_{set2}: New setpoint after AUTO$_{ADAPT}$ control.

$H_{fac.}$: Factory setting.

H_{auto_min}: A fixed value of 1.5 m.

The AUTO$_{ADAPT}$ control mode is a form of proportional-pressure control where the control curves have a fixed origin, H_{auto_min}.

The AUTO$_{ADAPT}$ control mode has been developed specifically for heating systems and we do not recommend that you use it for air-conditioning and cooling systems.

"FLOW$_{ADAPT}$"

Pump variant		"FLOW$_{ADAPT}$"
TPE3, TPE3 D		-
TPE2, TPE2 D		-
TPE Series 2000	0.12 - 11 kW, 2-pole 0.12 - 7.5 kW, 4-pole	-
	15-22 kW, 2-pole 11 - 18.5 kW, 4-pole	-
TPE Series 1000	0.12 - 11 kW, 2-pole 0.12 - 7.5 kW, 4-pole	-
	15-22 kW, 2-pole 11 - 18.5 kW, 4-pole	-

When you select FLOW$_{ADAPT}$, the pump runs AUTO$_{ADAPT}$ and ensures that the flow rate never exceeds the entered FLOW$_{LIMIT}$ value.

The setting range for FLOW$_{LIMIT}$ is 25 to 90 % of the maximum flow rate of the pump.

The factory setting of the FLOW$_{LIMIT}$ is the flow rate where the AUTO$_{ADAPT}$ factory setting meets the maximum curve. See fig. 51.

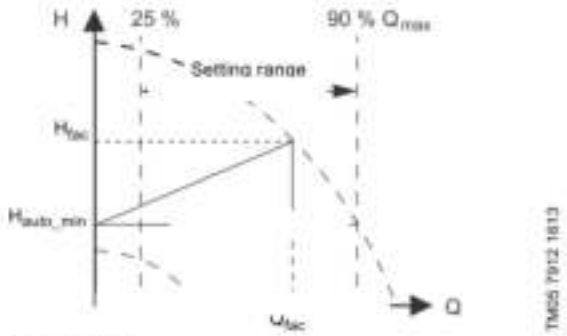

Fig. 51 FLOW$_{ADAPT}$

"Proportional pressure"

Pump variant		"Proportional pressure"
TPE3, TPE3 D		-
TPE2, TPE2 D		-
TPE Series 2000	0.12 - 11 kW, 2-pole 0.12 - 7.5 kW, 4-pole	•
	15-22 kW, 2-pole 11 - 18.5 kW, 4-pole	•
TPE Series 1000	0.12 - 11 kW, 2-pole 0.12 - 7.5 kW, 4-pole	-
	15-22 kW, 2-pole 11 - 18.5 kW, 4-pole	-

The head of the pump is reduced at decreasing water demand and increased at rising water demand. See fig. 52.

This control mode is especially suitable in systems with relatively large pressure losses in the distribution pipes. The head of the pump increases proportionally to the flow in the system to compensate for the large pressure losses in the distribution pipes.

You can set the setpoint with an accuracy of 0.1 m. The head against a closed valve is half the setpoint.

For more information about settings, see *"Proportional-pressure setup"* on page 71.

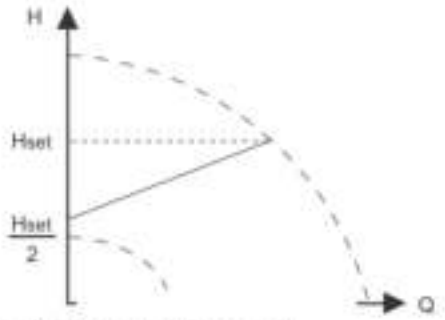

Fig. 52 "Proportional pressure"

Example

- Factory-fitted differential-pressure sensor.

Fig. 53 "Proportional pressure"

Controller settings

For recommended controller settings, see *"Controller" ("Controller settings")* on page 79.

"Constant pressure"

Pump variant		"Constant pressure"
TPE3, TPE3 D		-
TPE2, TPE2 D		-
TPE Series 2000	0.12 - 11 kW, 2-pole 0.12 - 7.5 kW, 4-pole	•
	15-22 kW, 2-pole 11 - 18.5 kW, 4-pole	-
TPE Series 1000	0.12 - 11 kW, 2-pole 0.12 - 7.5 kW, 4-pole	•
	15-22 kW, 2-pole 11 - 18.5 kW, 4-pole	•

We recommend this control mode if the pump is to deliver a constant pressure, independently of the flow in the system. The pump maintains a constant pressure independently of the flow rate. See fig. 54.

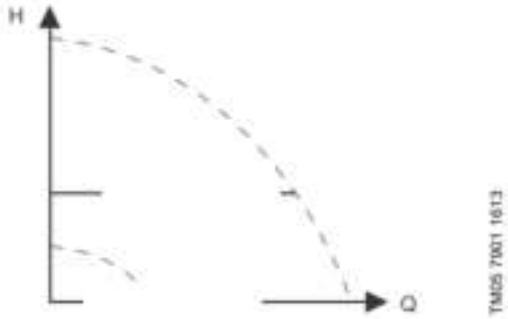

Fig. 54 "Constant pressure"

This control mode requires an external pressure sensor as shown in the examples below. You can set the pressure sensor in the "Assist" menu. See *"Assisted pump setup"* on page 92.

Examples

- One external pressure sensor.

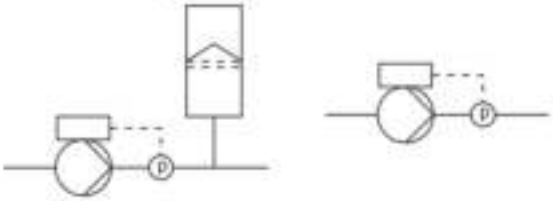

Fig. 55 "Constant pressure"

Controller settings

For recommended controller settings, see *"Controller" ("Controller settings")* on page 79.

"Constant temperature"

Pump variant		"Constant temperature"
TPE3, TPE3 D		-
TPE2, TPE2 D		-
TPE Series 2000	0.12 - 11 kW, 2-pole 0.12 - 7.5 kW, 4-pole	•
	15-22 kW, 2-pole 11 - 18.5 kW, 4-pole	-
TPE Series 1000	0.12 - 11 kW, 2-pole 0.12 - 7.5 kW, 4-pole	•
	15-22 kW, 2-pole 11 - 18.5 kW, 4-pole	•

This control mode ensures a constant temperature. Constant temperature is a comfort control mode that you can use in hot water recirculation systems to control the flow rate to maintain a fixed temperature in the system. See fig. 56.

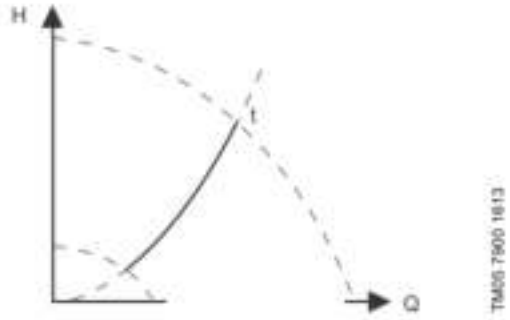

Fig. 56 "Constant temperature"

This control mode requires either an internal or external temperature sensor as shown in the examples below.

Examples

- Factory-fitted temperature sensor. Only TPE3, TPE3 D.

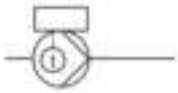

- One external temperature sensor.

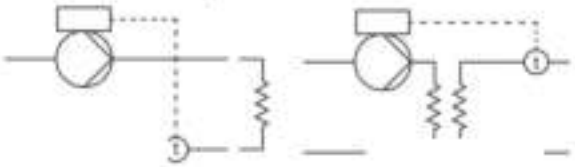

Fig. 57 "Constant temperature"

Controller settings

For recommended controller settings, see *"Controller" ("Controller settings")* on page 79.

"Constant differential pressure"

Pump variant		"Constant differential pressure"
TPE3, TPE3 D		-
TPE2, TPE2 D		-
TPE Series 2000	0.12 - 11 kW, 2-pole 0.12 - 7.5 kW, 4-pole	•
	15-22 kW, 2-pole 11 - 18.5 kW, 4-pole	•
TPE Series 1000	0.12 - 11 kW, 2-pole 0.12 - 7.5 kW, 4-pole	•
	15-22 kW, 2-pole 11 - 18.5 kW, 4-pole	•

The pump maintains a constant differential pressure, independently of the flow rate in the system. See fig. 58. This control mode is primarily suitable for systems with relatively small pressure losses.

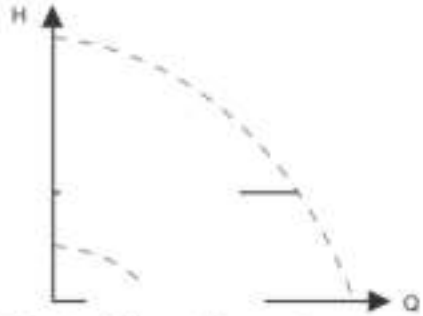

TM05 7901 1613

Fig. 58 "Constant differential pressure"

This control mode requires either an internal or external differential-pressure sensor or two external pressure sensors. See the examples below.

Examples

- Factory-fitted differential-pressure sensor, only TPE3, TPE3 D and TPE, TPED Series 2000.

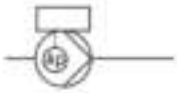

- One external differential-pressure sensor.
  The pump uses the input from the sensor to control the differential pressure. You can set the sensor manually or by using the "Assist" menu. See *"Assisted pump setup"* on page 92.

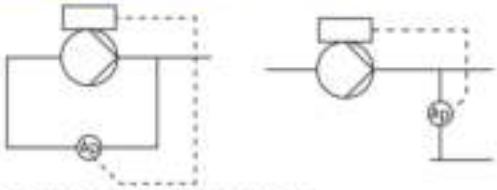

- Two external pressure sensors.
  Constant differential-pressure control is achievable with two pressure sensors. The pump uses the inputs from the two sensors and calculates the differential pressure. The sensors must have the same unit and must be set as feedback sensors. You can set the sensors manually, sensor by sensor, or by using the "Assist" menu. See *"Assisted pump setup"* on page 92.

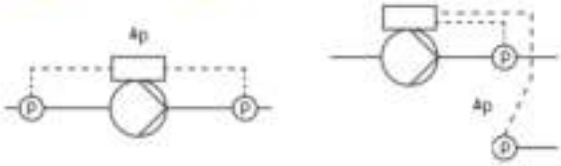

Fig. 59 "Constant differential pressure"

Controller settings

For recommended controller settings, see *"Controller" ("Controller settings")* on page 79.

"Constant differential temperature"

Pump variant		"Constant differential temperature"
TPE3, TPE3 D		-
TPE2, TPE2 D		-
TPE Series 2000	0.12 - 11 kW, 2-pole 0.12 - 7.5 kW, 4-pole	•
	15-22 kW, 2-pole 11 - 18.5 kW, 4-pole	-
TPE Series 1000	0.12 - 11 kW, 2-pole 0.12 - 7.5 kW, 4-pole	•
	15-22 kW, 2-pole 11 - 18.5 kW, 4-pole	•

The pump maintains a constant differential temperature in the system and the pump performance is controlled according to this. See fig. 60.

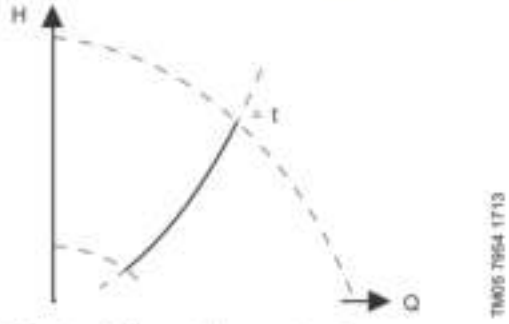

Fig. 60 "Constant differential temperature"

This control mode requires either two temperature sensors or one external differential-temperature sensor. See the examples below.

The temperature sensors can either be analog sensors connected to two of the analog inputs or two Pt100/Pt1000 sensors connected to the Pt100/1000 inputs, if these are available on the specific pump.

Set the sensor in the "Assist" menu under "Assisted pump setup". See *"Assisted pump setup"* on page 92.

Examples

- Factory-fitted temperature sensor and an external temperature sensor. Only TPE3, TPE3 D.

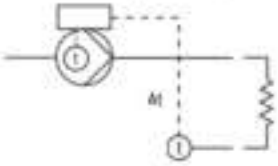

- Two external temperature sensors. Not available for TPE 15-22 kW 2-pole and 11 - 18.5 kW 4-pole. Constant differential-temperature control is achievable with two temperature sensors. The pump uses the inputs from the two sensors and calculates the differential temperature.
  The sensors must have the same unit and must be set as feedback sensors. You can set the sensors manually, sensor by sensor, or by using the "Assist" menu. See *"Assisted pump setup"* on page 92.

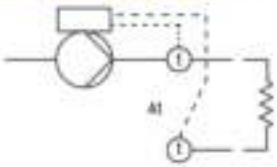

- One external differential-temperature sensor.
  The pump uses the input from the sensor to control the differential temperature.
  You can set the sensor manually or by using the "Assist" menu. See *"Assisted pump setup"* on page 92.

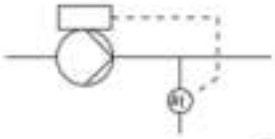

Fig. 61 Constant differential temperature

Controller settings

For recommended controller settings, see *"Controller" ("Controller settings")* on page 79.

"Constant flow rate"

Pump variant		"Constant flow rate"
TPE3, TPE3 D		-
TPE2, TPE2 D		-
TPE Series 2000	0.12 - 11 kW, 2-pole 0.12 - 7.5 kW, 4-pole	•
	15-22 kW, 2-pole 11 - 18.5 kW, 4-pole	-
TPE Series 1000	0.12 - 11 kW, 2-pole 0.12 - 7.5 kW, 4-pole	•
	15-22 kW, 2-pole 11 - 18.5 kW, 4-pole	•

The pump maintains a constant flow rate in the system, independently of the head. See fig. 62.

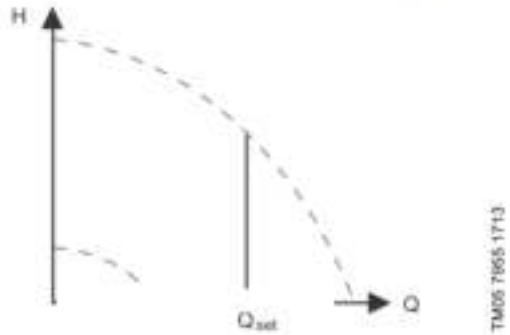

Fig. 62 Constant flow rate

This control mode requires an external flow sensor. See the example below.

Example

- One external flow sensor.

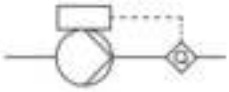

Fig. 63 Constant flow rate

Controller settings

For recommended controller settings, see *"Controller" ("Controller settings")* on page 79.

"Constant level"

Pump variant		"Constant level"
TPE3, TPE3 D		-
TPE2, TPE2 D		-
TPE Series 2000	0.12 - 11 kW, 2-pole 0.12 - 7.5 kW, 4-pole	•
	15-22 kW, 2-pole 11 - 18.5 kW, 4-pole	-
TPE Series 1000	0.12 - 11 kW, 2-pole 0.12 - 7.5 kW, 4-pole	•
	15-22 kW, 2-pole 11 - 18.5 kW, 4-pole	-

The pump maintains a constant level, independently of the flow rate. See fig. 64.

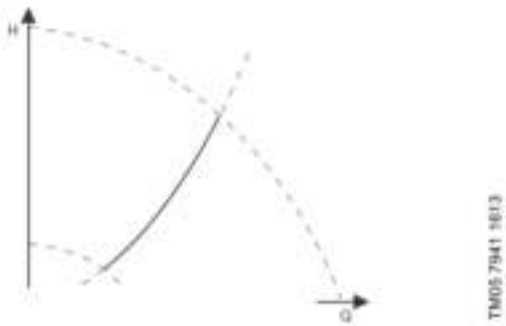

Fig. 64 "Constant level"

This control mode requires an external level sensor.

The pump can control the level in a tank in two ways:

- As an emptying function where the pump draws the liquid from the tank.
- As a filling function where the pump pumps the liquid into the tank.

See fig. 65.

The type of level control function depends on the setting of the built-in controller. See *"Controller" ("Controller settings")* on page 79.

Examples

- One external level sensor.
  – emptying function.

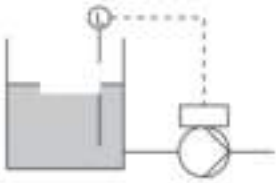

- One external level sensor.
  – filling function.

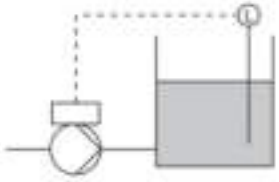

Fig. 65 Constant level

Controller settings

For recommended controller settings, see *"Controller" ("Controller settings")* on page 79.

"Constant other value"

Pump variant		"Constant other value"
TPE3, TPE3 D		-
TPE2, TPE2 D		-
TPE Series 2000	0.12 - 11 kW, 2-pole 0.12 - 7.5 kW, 4-pole	•
	15-22 kW, 2-pole 11 - 18.5 kW, 4-pole	-
TPE Series 1000	0.12 - 11 kW, 2-pole 0.12 - 7.5 kW, 4-pole	•
	15-22 kW, 2-pole 11 - 18.5 kW, 4-pole	-

Any other value is kept constant.

Use this control mode if you want to control a value which is not available in the "Control mode" menu. Connect a sensor measuring the controlled value to one of the analog inputs of the pump. The controlled value will be shown in percentage of sensor range.

Constant curve

Pump variant		"Constant curve"
TPE3, TPE3 D		-
TPE2, TPE2 D		-
TPE Series 2000	0.12 - 11 kW, 2-pole 0.12 - 7.5 kW, 4-pole	•
	15-22 kW, 2-pole 11 - 18.5 kW, 4-pole	•
TPE Series 1000	0.12 - 11 kW, 2-pole 0.12 - 7.5 kW, 4-pole	•
	15-22 kW, 2-pole 11 - 18.5 kW, 4-pole	•

You can set the pump to operate according to a constant curve, like an uncontrolled pump. See fig. 66.

You can set the desired speed in % of maximum speed in the range from 13 to 100 %.

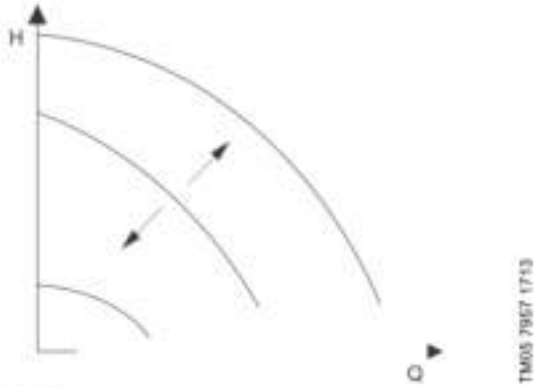

Fig. 66 Constant curve

Depending on the system characteristic and the duty point, the 100 % setting may be slightly smaller than the actual maximum curve of the pump even though the display shows 100 %. This is due to the power limitations built into the pump. The deviation varies according to pump type and pressure loss in the pipes.

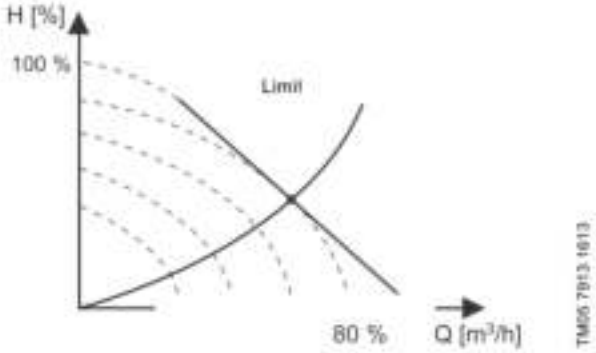

Fig. 67 Power and pressure limitations influencing the maximum curve

Controller settings

For recommended controller settings, see *"Controller" ("Controller settings")* on page 79.

"Proportional-pressure setup"

Pump variant		"Proportional-pressure setup"
TPE3, TPE3 D		-
TPE2, TPE2 D		-
TPE Series 2000	0.12 - 11 kW, 2-pole 0.12 - 7.5 kW, 4-pole	•
	15-22 kW, 2-pole 11 - 18.5 kW, 4-pole	-
TPE Series 1000	0.12 - 11 kW, 2-pole 0.12 - 7.5 kW, 4-pole	-
	15-22 kW, 2-pole 11 - 18.5 kW, 4-pole	-

"Control-curve function"

You can set the curve either to quadratic or linear.

"Zero-flow head"

You can set this value in % of the setpoint. With a setting of 100 %, the control mode is equal to constant differential pressure.

"FLOW$_{LIMIT}$"

Pump variant		"FLOW$_{LIMIT}$"
TPE3, TPE3 D		-
TPE2, TPE2 D		-
TPE Series 2000	0.12 - 11 kW, 2-pole 0.12 - 7.5 kW, 4-pole	-
	15-22 kW, 2-pole 11 - 18.5 kW, 4-pole	-
TPE Series 1000	0.12 - 11 kW, 2-pole 0.12 - 7.5 kW, 4-pole	-
	15-22 kW, 2-pole 11 - 18.5 kW, 4-pole	-

FLOW$_{LIMIT}$

- Enable the FLOW$_{LIMIT}$ function.
- Set the FLOW$_{LIMIT}$

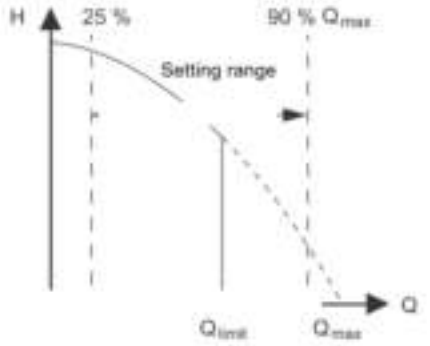

Fig. 68 "FLOW$_{LIMIT}$"

You can combine the FLOW$_{LIMIT}$ function with the following control modes:

- Proportional pressure
- Constant differential pressure
- Constant differential temperature
- Constant temperature
- Constant curve.

A flow-limiting function ensures that the flow rate never exceeds the entered FLOW$_{LIMIT}$ value.

The setting range for FLOW$_{LIMIT}$ is 25 % to 90 % of the Q_{max} of the pump.

The factory setting of the FLOW$_{LIMIT}$ is the flow rate where the AUTO$_{ADAPT}$ factory setting meets the maximum curve. See fig. 51.

"Automatic night setback"

Pump variant		"Automatic night setback"
TPE3, TPE3 D		-
TPE2, TPE2 D		-
TPE Series 2000	0.12 - 11 kW, 2-pole 0.12 - 7.5 kW, 4-pole	-
	15-22 kW, 2-pole 11 - 18.5 kW, 4-pole	-
TPE Series 1000	0.12 - 11 kW, 2-pole 0.12 - 7.5 kW, 4-pole	-
	15-22 kW, 2-pole 11 - 18.5 kW, 4-pole	-

Once you have enabled automatic night setback, the pump automatically changes between normal duty and night setback, duty at low performance.

Changeover between normal duty and night setback depends on the flow-pipe temperature.

The pump automatically changes over to night setback when the built-in sensor registers a flow-pipe temperature drop of more than 10 to 15 °C within approximately two hours. The temperature drop must be at least 0.1 °C/min.

Changeover to normal duty takes place without a time lag when the temperature has increased by approximately 10 °C.

Note: You cannot enable automatic night setback when the pump is in constant-curve mode.

"Sensor type"

Pump variant		"Sensor type"
TPE3, TPE3 D		-
TPE2, TPE2 D		-
TPE Series 2000	0.12 - 11 kW, 2-pole 0.12 - 7.5 kW, 4-pole	-
	15-22 kW, 2-pole 11 - 18.5 kW, 4-pole	-
TPE Series 1000	0.12 - 11 kW, 2-pole 0.12 - 7.5 kW, 4-pole	-
	15-22 kW, 2-pole 11 - 18.5 kW, 4-pole	•

The setting of the sensor is only relevant in the case of controlled operation.

Select among the following values:

- Sensor output signal
  0-10 V
  0-20 mA
  4-20 mA.
- Unit of measurement of sensor:
  bar, mbar, m, kPa, psi, ft, m^3/h, m^3/s, l/s, gpm, °C, °F, %.
- Sensor measuring range.

"Analog inputs"

Pump variant		"Analog inputs"
TPE3, TPE3 D		-
TPE2, TPE2 D		-
TPE Series 2000	0.12 - 11 kW, 2-pole 0.12 - 7.5 kW, 4-pole	•
	15-22 kW, 2-pole 11 - 18.5 kW, 4-pole	-
TPE Series 1000	0.12 - 11 kW, 2-pole 0.12 - 7.5 kW, 4-pole	•
	15-22 kW, 2-pole 11 - 18.5 kW, 4-pole	-

Function	Terminals*
"Analog input 1, setup"	-
"Analog input 2, setup"	-
"Analog input 3, setup"	-

* See *Connection terminals, advanced functional module, FM 300* on page 147.

Set the analog input for a feedback sensor via the "Assisted pump setup" menu. See *"Assisted pump setup"* on page 92.

If you want to set an analog input for other purposes, you can do this manually.

You can set the analog inputs via the "Setup, analog input" menu. See *"Setup, analog input"* on page 92.

If you perform the manual setting via Grundfos GO, you need to enter the menu for the analog input under the "Settings" menu.

Function

You can set the analog inputs to these functions:

- "Not active"
- "Feedback sensor"
- "Ext. setpoint infl."
  See *"External setpoint influence"* on page 81.
- "Other function".

Measured parameter

Select one of the parameters, that is the parameter to be measured in the system by the sensor connected to the actual analog input. See fig. 69.

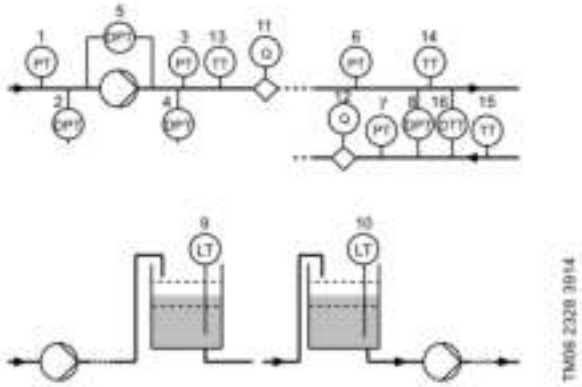

Fig. 69 Overview of sensor locations

Sensor function, measured parameter	Pos.
"Inlet pressure"	1
"Diff. press., inlet"	2
"Liquid temp."	3
"Diff. press., outlet"	4
"Diff. press., pump"	5
"Operating mode"	6
"Press. 2, external"	7
"Diff. press., ext."	8
"Storage tank level"	9
"Feed tank level"	10
"Pump flow"	11
"Flow, external"	12
"Liquid temp."	13
"Temperature 1"	14
"Temperature 2"	15
"Diff. temp., ext."	16
"Ambient temp."	Not shown
"Other parameter"	Not shown

"Unit"

Available measuring units:

Parameter	Possible measuring units
Pressure	bar, m, kPa, psi, ft
Level	m, ft, in
"Flow rate"	m^3/h, l/s, yd^3/h, gpm
"Liquid temp."	°C, °F
"Other parameter"	-

Electrical signal

Select signal type:

- "0.5 - 3.5 V"
- "0-5 V"
- "0-10 V"
- "0-20 mA"
- "4-20 mA".

Sensor range, minimum value

Set the minimum value of the connected sensor.

Sensor range, maximum value

Set the maximum value of the connected sensor.

Factory setting

See *14. Factory settings of E-pumps* on page 122.

Setting two sensors for differential measurement

In order to measure the difference of a parameter between two points, set the corresponding sensors as follows:

Parameter	Analog input for sensor 1	Analog input for sensor 2
Pressure, option 1	Differential pressure, inlet	Differential pressure, outlet
Pressure, option 2	Pressure 1, external	Pressure 2, external
Flow	Pump flow	Flow, external
Temperature	Temperature 1	Temperature 2

If you want to use the control mode "constant differential pressure", you must choose the function "Feedback sensor" for the analog input of both sensors.

"Built-in Grundfos sensor"

Pump variant		"Built-in Grundfos sensor"
TPE3, TPE3 D		-
TPE2, TPE2 D		
TPE Series 2000	0.12 - 11 kW, 2-pole 0.12 - 7.5 kW, 4-pole	•
	15-22 kW, 2-pole 11 - 18.5 kW, 4-pole	-
TPE Series 1000	0.12 - 11 kW, 2-pole 0.12 - 7.5 kW, 4-pole	-
	15-22 kW, 2-pole 11 - 18.5 kW, 4-pole	-

You can select the function of the built-in sensor in the "Built-in Grundfos sensor" menu.

Set the "Built-in Grundfos sensor" via the "Assisted pump setup" menu. See *"Assisted pump setup"* on page 92.

If you perform the setting manually in the advanced control panel, you must enter the "Analog inputs" menu under the "Settings" menu in order to access the "Built-in Grundfos sensor" menu.

If you perform the setting manually via Grundfos GO, you need to enter the menu for the "Built-in Grundfos sensor" under the "Settings" menu.

Function

You can set the built-in sensor to these functions:

- "Grundfos diff.-pressure sensor"
  - "Not active"
  - "Feedback sensor"
  - "Setpoint influence"
  - "Other function".
- "Grundfos temperature sensor"
  - "Not active"
  - "Feedback sensor"
  - "Setpoint influence"
  - "Other function".

Factory setting

See *14. Factory settings of E-pumps* on page 122.

"Pt100/1000 inputs"

Pump variant		"Pt100/1000 inputs"
TPE3, TPE3 D		-
TPE2, TPE2 D		-
TPE Series 2000	0.12 - 11 kW, 2-pole 0.12 - 7.5 kW, 4-pole	•
	15-22 kW, 2-pole 11 - 18.5 kW, 4-pole	-
TPE Series 1000	0.12 - 11 kW, 2-pole 0.12 - 7.5 kW, 4-pole	•
	15-22 kW, 2-pole 11 - 18.5 kW, 4-pole	-

Function	Terminals*
"Pt100/1000 input 1, setup"	17 and 18
"Pt100/1000 input 2, setup"	18 and 19

* See *Connection terminals, advanced functional module, FM 300* on page 147.

Set the Pt100/1000 input for a feedback sensor via the "Assisted pump setup" menu. See *"Assisted pump setup"* on page 92.

If you want to set a Pt100/1000 input for other purposes, you can do this manually.

You can set the analog inputs via the "Setup, analog input" menu. See *"Setup, analog input"* on page 92.

If you perform the manual setting via Grundfos GO, you need to enter the menu for the Pt100/1000 input under the "Settings" menu.

Function

You can set the Pt100/1000 inputs to these functions:

- "Not active"
- "Feedback sensor"
- "Ext. setpoint infl."
  See *"External setpoint influence"* on page 81.
- "Other function".

Measured parameter

Select one of the parameters, such as the parameter to be measured in the system by the Pt100/1000 sensor connected to the actual Pt100/1000 input. See fig. 70.

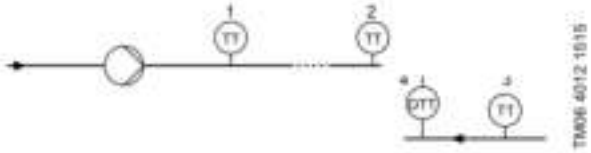

Fig. 70 Overview of Pt100/1000 sensor locations

Parameter	Pos.
"Liquid temp."	1
"Temperature 1"	2
"Temperature 2"	4
"Ambient temp."	Not shown

Measuring range

-50 to +204 °C.

Factory setting

See *14. Factory settings of E-pumps* on page 122.

"Digital inputs"

Pump variant		"Digital inputs"
TPE3, TPE3 D		-
TPE2, TPE2 D		-
TPE Series 2000	0.12 - 11 kW, 2-pole 0.12 - 7.5 kW, 4-pole	•
	15-22 kW, 2-pole 11 - 18.5 kW, 4-pole	•
TPE Series 1000	0.12 - 11 kW, 2-pole 0.12 - 7.5 kW, 4-pole	•
	15-22 kW, 2-pole 11 - 18.5 kW, 4-pole	•

TPE2, TPE3 pumps and TPE Series 1000 and TPE Series 2000 0.12 - 11 kW, 2-pole and 0.12 - 7.5 kW, 4-pole pumps

Function	Terminals*
"Digital input 1, setup"	5 and 6
"Digital input 2, setup"	8 and 9

* See *Connection terminals, advanced functional module, FM 300* on page 147.

To set a digital input, make the settings below.

Function

Select one of these functions:

- "Not active"
  When set to "Not active", the input has no function.
- "External stop"
  When the input is deactivated, open circuit, the pump stops.
- "Min.", minimum speed
  When the input is activated, the pump runs at the set minimum speed.
- "Max.", maximum speed
  When the input is activated, the pump runs at the set maximum speed.
- "User-defined speed"
  When the input is activated, the motor runs at a speed set by the user.
- "External fault"
  When the input is activated, a timer starts. If the input is activated for more than 5 seconds, the pump stops and a fault is indicated. This function depends on input from external equipment.
- "Alarm resetting"
  When the input is activated, a possible fault indication is reset.
- "Dry running"
  When this function has been selected, lack of inlet pressure or water shortage can be detected. When lack of inlet pressure or water shortage, dry running, is detected, the pump stops. The pump cannot restart as long as the input is activated. This requires the use of an accessory, such as these:
  - a pressure switch installed on the inlet side of the pump
  - a float switch installed on the inlet side of the pump.

- "Accumulated flow"
  When this function has been selected, the accumulated flow rate can be registered. This requires the use of a flowmeter which can give a feedback signal as a pulse per defined flow of water.
  See *"Pulse flowmeter setup"* on page 85.
- "Predefined setpoint digit 1", applies only to digital input 2
  When digital inputs are set to a predefined setpoint, the pump operates according to a setpoint based on the combination of the activated digital inputs.
  See *"Predefined setpoints"* on page 83.
- "Activate output"
  When the input is activated, the related digital output is activated. See *"Digital inputs/outputs"* on page 76. This is done without any changes to pump operation.
- "Local motor stop"
  When the input is activated, the given pump in a multipump system stops without affecting the performance of the other pumps in the system.

The priority of the selected functions in relation to each other appears from section *Priority of settings* on page 97.

A stop command always has the highest priority.

Activation delay

Pump variant		Activation delay
TPE3, TPE3 D		-
TPE2, TPE2 D		-
TPE Series 2000	0.12 - 11 kW, 2-pole 0.12 - 7.5 kW, 4-pole	•
	15-22 kW, 2-pole 11 - 18.5 kW, 4-pole	-
TPE Series 1000	0.12 - 11 kW, 2-pole 0.12 - 7.5 kW, 4-pole	•
	15-22 kW, 2-pole 11 - 18.5 kW, 4-pole	-

Select the activation delay, T1.

It is the time between the digital signal and the activation of the selected function.

Range: 0 to 6000 seconds.

Duration timer mode

Select the mode. See fig. 71.

- "Not active"
- active with interrupt, mode A
- active without interrupt, mode B
- active with after-run, mode C.

Select the duration time, T2.

It is the time which, together with the mode, determines how long the selected function is active.

Range: 0 to 15,000 seconds.

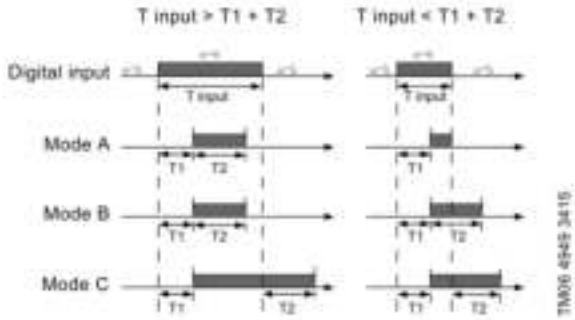

Fig. 71 Duration timer function of digital inputs

Factory setting

See *14. Factory settings of E-pumps* on page 122.

Motors from 15-22 kW, 2-pole and 11 - 18.5 kW, 4-pole

You can set the digital input of the pump to different functions. Select one of the following functions:

- "Min.", minimum curve
- "Max.", maximum curve.

You activate the selected function by closing the contact between terminals 1 and 9.

"Min."

When the input is activated, the pump operates according to the minimum curve.

"Max."

When the input is activated, the pump operates according to the maximum curve.

"Digital inputs/outputs"

Pump variant		"Digital inputs/ outputs"
TPE3, TPE3 D		-
TPE2, TPE2 D		-
TPE Series 2000	0.12 - 11 kW, 2-pole 0.12 - 7.5 kW, 4-pole	•
	15-22 kW, 2-pole 11 - 18.5 kW, 4-pole	-
TPE Series 1000	0.12 - 11 kW, 2-pole 0.12 - 7.5 kW, 4-pole	•
	15-22 kW, 2-pole 11 - 18.5 kW, 4-pole	-

Function	Terminals*
"Digital input/output 3, setup"	10 and 16
"Digital input/output 4, setup"	11 and 18

* See *Connection terminals, advanced functional module, FM 300* on page 147.

You can select if the interface must be used as input or output. The output is an open collector and you can connect it to for example an external relay or controller such as a PLC.

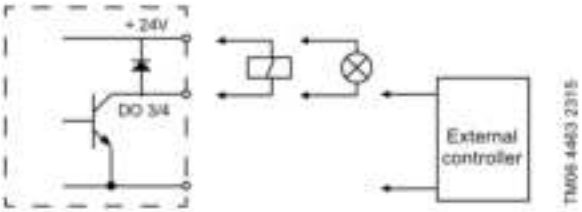

Fig. 72 Example of configurable digital inputs or outputs

To set a digital input or output, make the settings below.

Mode

You can set the digital input or output 3 and 4 to act as digital input or digital output:

- "Digital input"
- "Digital output".

Function

You can set the digital input or output 3 and 4 to the functions mentioned below.

Possible functions, digital input or output 3

"Function if input" See details in section *"Digital inputs"* on page 74	"Function if output" See details in section *"Signal relays 1 and 2" ("Relay outputs")* on page 77
• "Not active"	• "Not active"
• "External stop"	• "Ready"
• "Min."	• "Alarm"
• "Max."	• "Operation"
• "User-defined speed"	• "Pump running"
• "External fault"	• "Warning"
• "Alarm resetting"	• "Limit 1 exceeded"
• "Dry running"	• "Limit 2 exceeded"
• "Accumulated flow"	• "Digital input 1, state"
• "Predefined setpoint 2"	• "Digital input 2, state"
• "Activate output"	• "Digital input 3, state"
• "Local motor stop"	• "Digital input 4, state"

Possible functions, digital input or output 4

"Function if input" See details in section *"Digital inputs"* on page 74	"Function if output" See details in section *"Signal relays 1 and 2" ("Relay outputs")* on page 77
• "Not active"	• "Not active"
• "External stop"	• "Ready"
• "Min."	• "Alarm"
• "Max."	• "Operation"
• "User-defined speed"	• "Pump running"
• "External fault"	• "Warning"
• "Alarm resetting"	• "Limit 1 exceeded"
• "Dry running"	• "Limit 2 exceeded"
• "Accumulated flow"	• "Digital input 1, state"
• "Predefined setpoint 3"	• "Digital input 2, state"
• "Activate output"	• "Digital input 3, state"
• "Local motor stop"	• "Digital input 4, state"

Activation delay

Pump variant		Activation delay
TPE3, TPE3 D		-
TPE2, TPE2 D		-
TPE Series 2000	0.12 - 11 kW, 2-pole 0.12 - 7.5 kW, 4-pole	•
	15-22 kW, 2-pole 11 - 18.5 kW, 4-pole	-
TPE Series 1000	0.12 - 11 kW, 2-pole 0.12 - 7.5 kW, 4-pole	•
	15-22 kW, 2-pole 11 - 18.5 kW, 4-pole	-

Select the activation delay, T1.

It is the time between the digital signal and the activation of the selected function.

Range: 0 to 6000 seconds.

Duration timer mode

Select the mode. See fig. 73.

- "Not active"
- active with interrupt, mode A
- active without interrupt, mode B
- active with after-run, mode C.

Select the duration time, T2.

It is the time which, together with the mode, determines how long the selected function is active.

Range: 0 to 15,000 seconds.

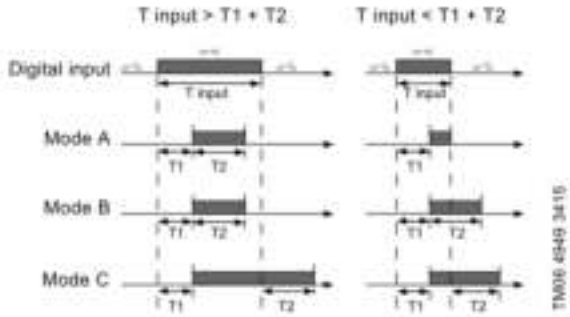

Fig. 73 Duration timer function of digital inputs

Factory setting

See *14. Factory settings of E-pumps* on page 122.

"Signal relays 1 and 2" ("Relay outputs")

Pump variant		Relay outputs	
		Signal relay 1	Signal relay 2
TPE3, TPE3 D		-	-
TPE2, TPE2 D		-	•
TPE Series 2000	0.12 - 11 kW, 2-pole 0.12 - 7.5 kW, 4-pole	•	•
	3 - 7.5 kW, 2-pole 1.5 - 7.5 kW, 4-pole	•	•
	11-22 kW, 2-pole 11 - 18.5 kW, 4-pole	•	•
TPE Series 1000	0.12 - 11 kW, 2-pole 0.12 - 7.5 kW, 4-pole	•	•
	3 - 7.5 kW, 2-pole 1.5 - 7.5 kW, 4-pole	•	•
	11-22 kW, 2-pole 11 - 18.5 kW, 4-pole	•	•

Function	Terminals*
"Relay output 1"	NC, C1, NO
"Relay output 2"	NC, C2, NO

* See *Connection terminals, advanced functional module, FM 300* on page 147.

The pump incorporates two signal relays for potential-free signalling. For further information, see *Indicator lights and signal relays* on page 99.

Function

You can configure the signal relays to be activated by one of the following incidents:

- "Not active".
- "Ready"
  The pump can be running or is ready to run and no alarms are present.
- "Alarm"
  There is an active alarm and the pump is stopped.
- "Operating" ("Operation")
  "Operating" equals "Running" but the pump is still in operation when it has been stopped due to a warning.
- "Running" ("Pump running")
- "Warning"
  There is an active warning.
- "Digital input 1, state"
  Follows digital input 1. If digital input 1 is activated, output is also activated.
- "Digital input 2, state"
  Follows digital input 2. If digital input 2 is activated, output is also activated.
- "Digital input 3, state"
  Follows digital input 3. If digital input 3 is activated, output is also activated.
- "Digital input 4, state"
  Follows digital input 4. If digital input 4 is activated, output is also activated.
- "Limit 1 exceeded"*
  When the "Limit 1 exceeded" function is activated, the signal relay is activated. See *"Limit-exceeded function"* on page 84.
- "Limit 2 exceeded"*
  When the "Limit 2 exceeded" function is activated, the signal relay is activated. See *"Limit-exceeded function"* on page 84.
- "Relubricate"
- "External fan control" ("Control of external fan")
  When you select "External fan control", the relay is activated if the internal temperature of the motor electronics reach a preset limit value.

* This function is only available for TPE3, TPE2, TPE Series 2000 and TPE Series 1000 pumps with motor sizes from 0.12 to 11 kW, 2-pole and 0.12 - 7.5 kW, 4-pole.

Factory setting

See *14. Factory settings of E-pumps* on page 122.

"Analog output"

Pump variant		"Analog output"
TPE3, TPE3 D		-
TPE2, TPE2 D		-
TPE Series 2000	0.12 - 11 kW, 2-pole 0.12 - 7.5 kW, 4-pole	•
	15-22 kW, 2-pole 11 - 18.5 kW, 4-pole	-
TPE Series 1000	0.12 - 11 kW, 2-pole 0.12 - 7.5 kW, 4-pole	•
	15-22 kW, 2-pole 11 - 18.5 kW, 4-pole	-

Function	Terminals*
"Analog output"	- -

* See *Connection terminals, advanced functional module, FM 300* on page 147.

The analog output enables the transfer of certain operating data to external control systems.

To set the analog output, make the settings below.

"Output signal"

- "0-10 V"
- "0-20 mA"
- "4-20 mA".

"Function of analog output"

- "Actual speed"

Signal range [V, mA]	"Actual speed" [%]		
	0	100	200
"0-10 V"	0 V	5 V	10 V
"0-20 mA"	0 mA	10 mA	20 mA
"4-20 mA"	4 mA	12 mA	20 mA

The reading is a percentage of nominal speed.

- "Actual value"

Signal range [V, mA]	"Actual value"	
	$Sensor_{min}$	$Sensor_{max}$
"0-10 V"	0 V	10 V
"0-20 mA"	0 mA	20 mA
"4-20 mA"	4 mA	20 mA

The reading is a percentage of the range between $sensor_{min}$ and $sensor_{max}$.

- "Resulting setpoint"

Signal range [V, mA]	"Resulting setpoint" [%]	
	0	100
"0-10 V"	0 V	10 V
"0-20 mA"	0 mA	20 mA
"4-20 mA"	4 mA	20 mA

The reading is a percentage of the external setpoint range.

- "Motor load"

Signal range [V, mA]	"Motor load" [%]	
	0	100
"0-10 V"	0 V	10 V
"0-20 mA"	0 mA	20 mA
"4-20 mA"	4 mA	20 mA

The reading is a percentage of the range between 0 and 200 % of the maximum permissible load at the actual speed.

- "Motor current"

Signal range [V, mA]	"Motor current" [%]		
	0	100	200
0-10 V	0 V	5 V	10 V
0-20 mA	0 mA	10 mA	20 mA
4-20 mA	4 mA	12 mA	20 mA

The reading is a percentage of the range between 0 and 200 % of the rated current.

- "Limit 1 exceeded" and "Limit 2 exceeded"

Signal range [V, mA]	"Limit-exceed function"	
	Output not active	Output active
"0-10 V"	0 V	10 V
"0-20 mA"	0 mA	20 mA
"4-20 mA"	4 mA	20 mA

The "Limit-exceeded function" is typically used for monitoring of secondary parameters in the system. If the limit is exceeded, an output, warning or alarm is activated.

- "Flow rate"

Signal range [V, mA]	"Flow rate" [%]		
	0	100	200
"0-10 V"	0 V	5 V	10 V
"0-20 mA"	0 mA	10 mA	20 mA
"4-20 mA"	4 mA	12 mA	20 mA

The reading is a percentage of the range between 0 and 200 % of the nominal flow.

Factory setting

See *14. Factory settings of E-pumps* on page 122.

"Controller" ("Controller settings")

Pump variant		"Controller settings"
TPE3, TPE3 D		-
TPE2, TPE2 D		-
TPE Series 2000	0.12 - 11 kW, 2-pole 0.12 - 7.5 kW, 4-pole	•
	15-22 kW, 2-pole 11 - 18.5 kW, 4-pole	-
TPE Series 1000	0.12 - 11 kW, 2-pole 0.12 - 7.5 kW, 4-pole	•
	15-22 kW, 2-pole 11 - 18.5 kW, 4-pole	•

The pumps have a factory default setting of gain, K_p, and integral time, T_i.

However, if the factory setting is not the optimum setting, you can change the gain and the integral time:

- Set the gain within the range from 0.1 to 20.
- Set the integral time within the range from 0.1 to 3600 seconds.
  If you select 3600 seconds, the controller functions as a P controller.

Furthermore, you can set the controller to inverse control. This means that if the setpoint is increased, the speed is reduced. In the case of inverse control, set the gain within the range from -0.1 to -20.

Guidelines for setting of PI controller

The tables below show the recommended controller settings:

"Differential-pressure control"	K_p	T_i
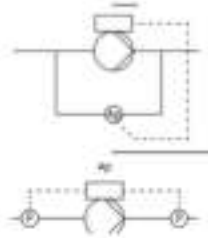	0.5	0.5
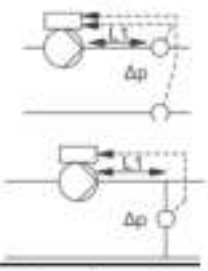	0.5	L1 < 5 m: 0.5 L1 > 5 m: 3 L1 > 10 m: 5

L1: Distance in metres between pump and sensor.

"Temperature control"	K_p Heating system[1]	K_p Cooling system[2]	T_i
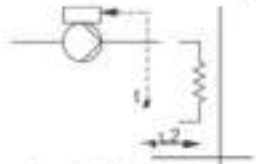	0.5	-0.5	10 + 5L2
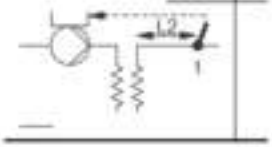	0.5	-0.5	30 + 5L2

1) In heating systems, an increase in pump performance results in a rise in temperature at the sensor.

2) In cooling systems, an increase in pump performance results in a drop in temperature at the sensor.

L2: Distance in metres between heat exchanger and sensor.

"Differential-temperature control"	K_p	T_i
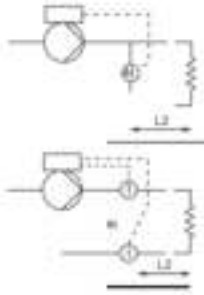	-0.5	10 + 5L2

L2: Distance in metres between heat exchanger and sensor.

"Flow control"	K_p	T_i
	0.5	0.5

"Constant-pressure control"	K_p	T_i
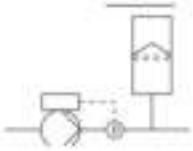	0.5	0.5
	0.1	0.5

"Level control"	K.	T.
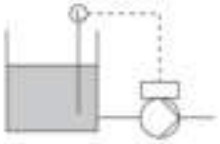	-2.5	100
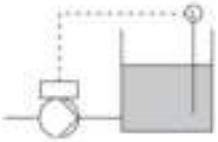	2.5	100

Rules of thumb

If the controller is too slow-reacting, increase the gain.

If the controller is hunting or unstable, dampen the system by reducing the gain or increasing the integral time.

Factory setting

See *14. Factory settings of E-pumps* on page 122.

"Operating range"

Pump variant		"Operating range"
TPE3, TPE3 D		-
TPE2, TPE2 D		-
TPE Series 2000	0.12 - 11 kW, 2-pole 0.12 - 7.5 kW, 4-pole	•
	15-22 kW, 2-pole 11 - 18.5 kW, 4-pole	-
TPE Series 1000	0.12 - 11 kW, 2-pole 0.12 - 7.5 kW, 4-pole	•
	15-22 kW, 2-pole 11 - 18.5 kW, 4-pole	•

Set the operating range as follows:

- Set the minimum speed within the range from fixed minimum speed to user-set maximum speed.
- Set the maximum speed within the range from user-set minimum speed to fixed maximum speed.

The range between the user-set minimum and maximum speeds is the operating range. See fig. 74.

Note: Speeds below 25 % may result in noise from the shaft seal.

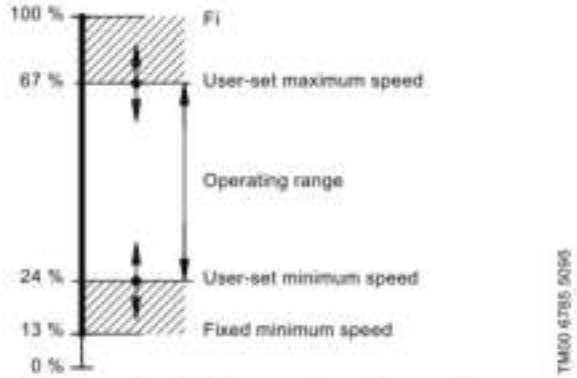

Fig. 74 Example of minimum and maximum settings

Factory setting

See *14. Factory settings of E-pumps* on page 122.

"External setpoint influence"

Pump variant		"External setpoint influence"
TPE3, TPE3 D		-
TPE2, TPE2 D		-
TPE Series 2000	0.12 - 11 kW, 2-pole 0.12 - 7.5 kW, 4-pole	•
	15-22 kW, 2-pole 11 - 18.5 kW, 4-pole	•
TPE Series 1000	0.12 - 11 kW, 2-pole 0.12 - 7.5 kW, 4-pole	•
	15-22 kW, 2-pole 11 - 18.5 kW, 4-pole	•

TPE2, TPE3 pumps and 0.12 - 11 kW, 2-pole and 0.12 - 7.5 kW, 4-pole motors

You can influence the setpoint by an external signal, either via one of the analog inputs or, if an advanced functional module is fitted, via one of the Pt100/1000 inputs.

Note: Before you can enable the "External setpoint function", set one of the analog inputs or Pt100/1000 inputs to "Setpoint influence".

See *"Analog inputs"* on page 72 and *"Pt100/1000 inputs"* on page 74.

If more than one input has been set to "Setpoint influence", the function selects the analog input with the lowest number, for example "Analog input 2", and ignores the other inputs, for example "Analog input 3" or "Pt100/1000 input 1".

Motors from 15-22 kW, 2-pole and 11 - 18.5 kW, 4-pole

You can set the input for external setpoint signal to different signal types. Select one of the following types:

- "0-10 V"
- "0-20 mA"
- "4-20 mA"
- "Not active".

If you select one of the signal types, the actual setpoint is influenced by the signal connected to the external setpoint input.

Example with constant pressure with linear influence

Actual setpoint: actual input signal x (setpoint - sensor min.) + sensor min.

At a lower sensor value of 0 bar, a setpoint of 2 bar and an external setpoint of 60 %, the actual setpoint is 0.60 x (2 - 0) + 0 = 1.2 bar.

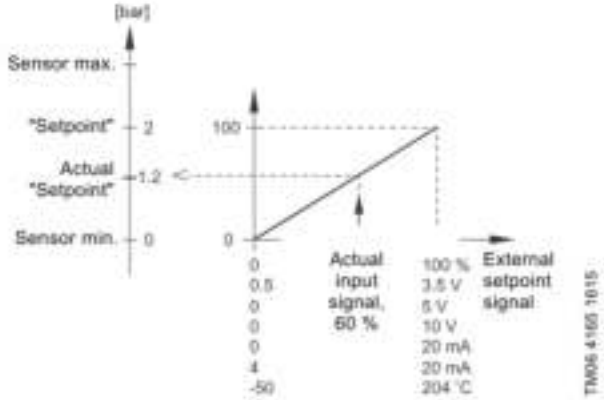

Fig. 75 Example of setpoint influence with sensor feedback

Example with constant curve with linear influence

Actual setpoint: actual input signal x (setpoint - user-set minimum speed) + user-set minimum speed.

At a user-set minimum speed of 25 %, a setpoint of 85 % and an external setpoint of 60 %, the actual setpoint is 0.60 x (85 - 25) + 25 = 61 %. See fig. 76.

In some cases, the maximum curve is limited to a lower speed. See fig. 76.

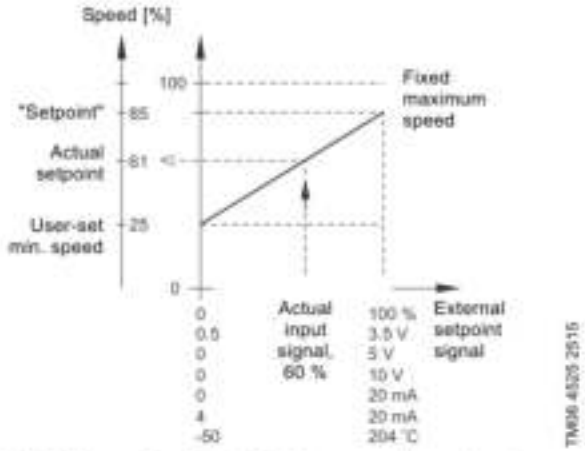

Fig. 76 Example of setpoint influence with constant curve

Factory setting

See *14. Factory settings of E-pumps* on page 122.

"Setpoint influence"

Pump variant		"Setpoint influence"
TPE3, TPE3 D		-
TPE2, TPE2 D		-
TPE Series 2000	0.12 - 11 kW, 2-pole 0.12 - 7.5 kW, 4-pole	•
	15-22 kW, 2-pole 11 - 18.5 kW, 4-pole	•
TPE Series 1000	0.12 - 11 kW, 2-pole 0.12 - 7.5 kW, 4-pole	•
	15-22 kW, 2-pole 11 - 18.5 kW, 4-pole	•

The table below gives an overview of the types of setpoint influence and the availability depending on pump type.

Type of setpoint influence	Pump type: TPE3		TPE Series 2000		TPE Series 1000	
	TPE3	TPE2	0.12 - 11 kW, 2-pole 0.12 - 7.5 kW, 4-pole	15-22 kW, 2-pole 11 - 18.5 kW, 4-pole	0.12 - 11 kW, 2-pole 0.12 - 7.5 kW, 4-pole	15-22 kW, 2-pole 11 - 18.5 kW, 4-pole
"Not active"	•	•	•	•	•	•
"Linear function"	•	•	-	-	•	•
"Linear with Stop"	•	•	-	-	•	-
"Influence table"	•	•	-	-	•	

You can select these functions:

- "Not active"
  When set to "Not active", the setpoint is not influenced from any external function.
- "Linear function"
  The setpoint is influenced linearly from 0 to 100 %. See fig. 77.

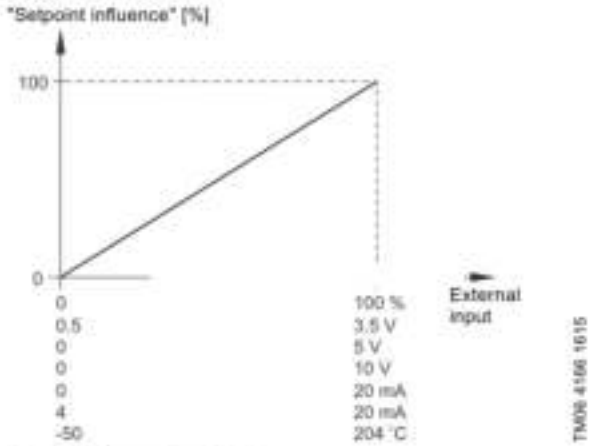

Fig. 77 "Linear function"

- "Linear with Stop"
  In the input signal range from 20 to 100 %, the setpoint is influenced linearly.
  If the input signal is below 10 %, the pump changes to operating mode "Stop".
  If the input signal is increased above 15 %, the operating mode is changed back to "Normal". See fig. 78.

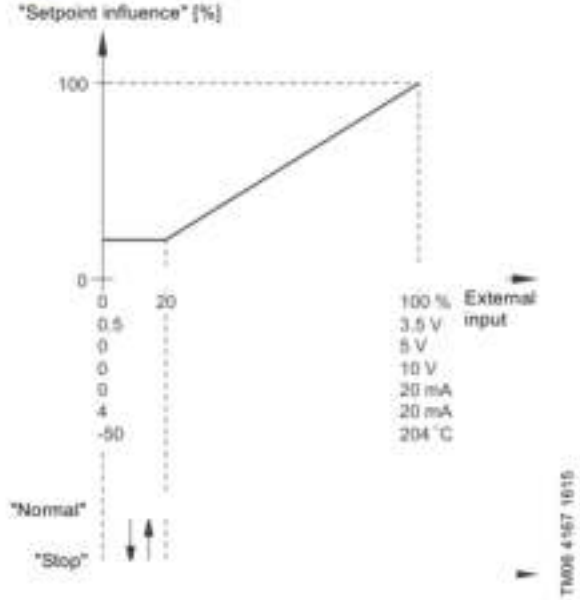

Fig. 78 "Linear with Stop"

- "Influence table"
  The setpoint is influenced by a curve made out of two to eight points. There will be a straight line between the points and a horizontal line before the first point and after the last point.

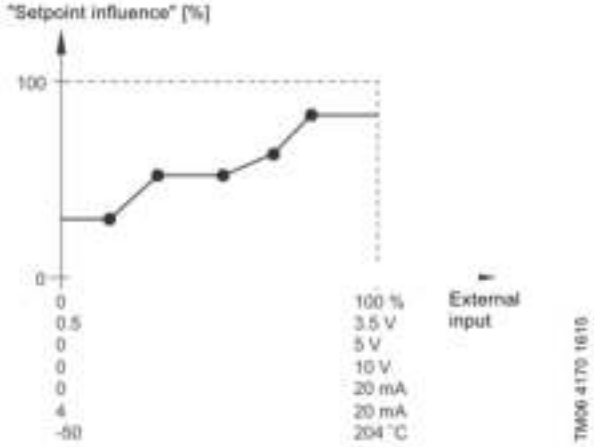

Fig. 79 "Influence table", example with five points

"Predefined setpoints"

Pump variant		"Predefined setpoints"
TPE3, TPE3 D		-
TPE2, TPE2 D		-
TPE Series 2000	0.12 - 11 kW, 2-pole 0.12 - 7.5 kW, 4-pole	•
	15-22 kW, 2-pole 11 - 18.5 kW, 4-pole	-
TPE Series 1000	0.12 - 11 kW, 2-pole 0.12 - 7.5 kW, 4-pole	•
	15-22 kW, 2-pole 11 - 18.5 kW, 4-pole	-

You can set and activate seven predefined setpoints by combining the input signals to digital inputs 2, 3 and 4 as shown in the table below.

Set the digital inputs 2, 3 and 4 to "Predefined setpoints" if all seven predefined setpoints are to be used. You can also set one or two of the digital inputs to "Predefined setpoints" but this will limit the number of predefined setpoints available.

"Digital inputs"			"Setpoint"
2	3	4	
0	0	0	Normal setpoint or stop
1	0	0	Predefined setpoint 1
0	1	0	Predefined setpoint 2
1	1	0	Predefined setpoint 3
0	0	1	Predefined setpoint 4
1	0	1	Predefined setpoint 5
0	1	1	Predefined setpoint 6
1	1	1	Predefined setpoint 7

0: Open contact
1: Closed contact

Example

Figure 80 shows how you can use the digital inputs to set seven predefined setpoints. Digital input 2 is open and digital inputs 3 and 4 are closed. If you compare with the table above, you can see that "Predefined setpoint 6" is activated.

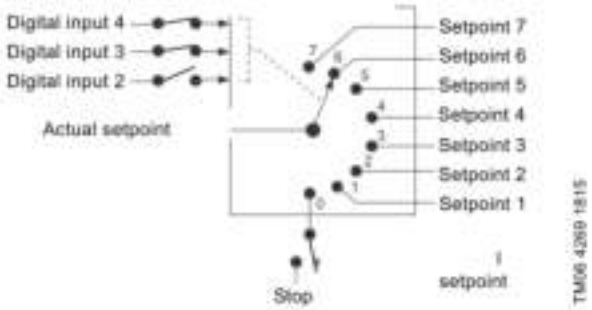

Fig. 80 Principle sketch showing how predefined setpoints function

If all digital inputs are open, the pump either stops or runs at the normal setpoint. Set the desired action with Grundfos GO or with the advanced control panel.

Factory setting

See *14. Factory settings of E-pumps* on page 122.

"Temperature influence"

Pump variant		"Temperature influence"
TPE3, TPE3 D		-
TPE2, TPE2 D		-
TPE Series 2000	0.12 - 11 kW, 2-pole 0.12 - 7.5 kW, 4-pole	-
	15-22 kW, 2-pole 11 - 18.5 kW, 4-pole	-
TPE Series 1000	0.12 - 11 kW, 2-pole 0.12 - 7.5 kW, 4-pole	-
	15-22 kW, 2-pole 11 - 18.5 kW, 4-pole	-

When this function is enabled in proportional- or constant-pressure control mode, the setpoint for head is reduced according to the liquid temperature.

You can set the temperature influence to function at liquid temperatures below 80 or 50 °C. These temperature limits are called T_{max}. The setpoint is reduced in relation to the head set which is equal to 100 % according to the characteristics below.

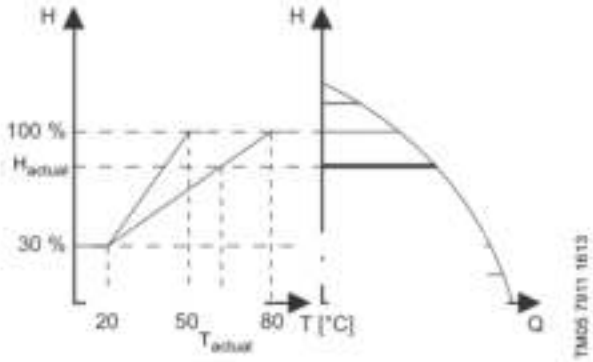

Fig. 81 "Temperature influence"

In the above example, T_{max} which is equal to 80 °C, has been selected. The actual liquid temperature, T_{actual}, causes the setpoint for head to be reduced from 100 % to H_{actual}.

The temperature influence function requires the following:

- proportional-pressure or constant-pressure control mode
- pump installed in flow pipe
- system with flow-pipe temperature control.

Temperature influence is suitable for the following systems:

- Systems with variable flows, for example two-pipe heating systems, in which the enabling of the temperature influence function ensures a further reduction of the pump performance in periods with small heating demands and consequently a reduced flow-pipe temperature.
- Systems with almost constant flows, for example one-pipe heating systems and underfloor heating systems, in which variable heating demands cannot be registered as changes in the head as it is the case with two-pipe heating systems. In such systems, you can only adjust the pump performance by enabling the temperature influence function.

Selection of the maximum temperature

In systems with a dimensioned flow-pipe temperature of:

- up to and including 55 °C, select $T_{max.}$ equal to 50 °C.
- above 55 °C, select $T_{max.}$ equal to 80 °C.

Note: You cannot use the temperature function in air-conditioning and cooling systems.

Factory setting

See *14. Factory settings of E-pumps* on page 122.

"Limit-exceeded function"

Pump variant		"Limit-exceeded function"
TPE3, TPE3 D		-
TPE2, TPE2 D		-
TPE Series 2000	0.12 - 11 kW, 2-pole 0.12 - 7.5 kW, 4-pole	•
	15-22 kW, 2-pole 11 - 18.5 kW, 4-pole	-
TPE Series 1000	0.12 - 11 kW, 2-pole 0.12 - 7.5 kW, 4-pole	•
	15-22 kW, 2-pole 11 - 18.5 kW, 4-pole	-

This function can monitor a measured parameter or one of the internal values such as speed, motor load or motor current. If a set limit is reached, a selected action can take place. You can set two limit-exceeded functions meaning that you can monitor two parameters or two limits of the same parameter simultaneously.

The function requires setting of the following:

Measured

Here you set the measured parameter to be monitored.

"Limit"

Here you set the limit which activates the function.

"Hysteresis band"

Here you set the hysteresis band.

"Limit exceeded when"

Here you can set if you want the function to be activated when the selected parameter exceeds or drops below the set limit.

- "Above limit"
  The function is activated if the measured parameter exceeds the set limit.
- "Below limit"
  The function is activated if the measured parameter drops below the set limit.

Action

If the value exceeds a limit, you can define an action. You can select the following actions:

- "No action"
  The pump remains in its current state. Use this setting if you only want to have a relay output when the limit is reached. See *"Signal relays 1 and 2" ("Relay outputs")* on page 77.
- "Warning"
  There is a warning.
- "Stop"
  The pump stops.
- "Min."
  The pump decreases speed to minimum.
- "Max."
  The pump increases speed to maximum.
- "User-defined speed"
  The pump runs at a speed set by the user.
- Alarm + Stop
  An alarm is given and the pump stops.
- Alarm + Min.
  An alarm is given and the pump decreases speed to minimum.
- Alarm + Max.
  An alarm is given and the pump increases speed to maximum.
- Alarm + User-defined speed
  An alarm is given and the pump runs at a speed set by the user.

"Detection delay"

You can set a detection delay which ensures that the monitored parameter stays above or below a set limit in a set time before the function is activated.

"Resetting delay"

The resetting delay is the time from which the measured parameter differs from the set limit including the set hysteresis band and until the function is reset.

Example

The function is to monitor the outlet pressure of a pump. If the pressure is below 5 bar for more than 5 seconds, a warning must be given. If the outlet pressure is above 7 bar for more than 8 seconds, you must reset the warning.

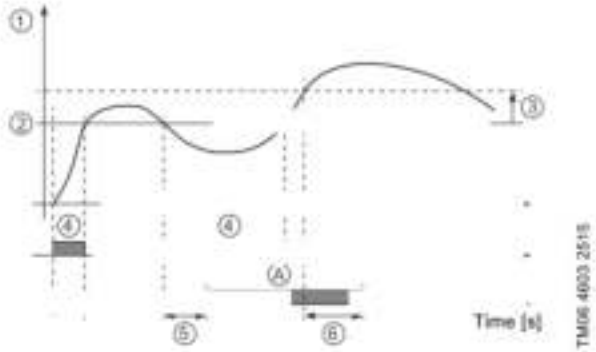

Fig. 82 Limit exceeded (example)

Pos.	Setting parameter	Setting
1	Measured	Outlet pressure
2	"Limit"	5 bar
3	"Hysteresis band"	2 bar
4	"Limit exceeded when"	Below limit
5	"Detection delay"	5 seconds
6	"Resetting delay"	4 seconds
A	Limit-exceeded function active	-
-	Action	Warning

Factory setting

See *14. Factory settings of E-pumps* on page 122.

Special functions

"Pulse flowmeter setup"

Pump variant		"Pulse flowmeter setup"
TPE3, TPE3 D		-
TPE2, TPE2 D		-
TPE Series 2000	0.12 - 11 kW, 2-pole 0.12 - 7.5 kW, 4-pole	•
	15-22 kW, 2-pole 11 - 18.5 kW, 4-pole	-
TPE Series 1000	0.12 - 11 kW, 2-pole 0.12 - 7.5 kW, 4-pole	•
	15-22 kW, 2-pole 11 - 18.5 kW, 4-pole	-

You can connect an external pulse flowmeter to one of the digital inputs in order to register the actual and accumulated flows. Based on this, you can also calculate the specific energy.

To enable a pulse flowmeter, set one of the digital inputs to "Accumulated flow" and set the pumped volume per pulse. See *"Digital inputs"* on page 74.

"Ramps"

Pump variant		"Ramps"
TPE3, TPE3 D		-
TPE2, TPE2 D		-
TPE Series 2000	0.12 - 11 kW, 2-pole 0.12 - 7.5 kW, 4-pole	•
	15-22 kW, 2-pole 11 - 18.5 kW, 4-pole	-
TPE Series 1000	0.12 - 11 kW, 2-pole 0.12 - 7.5 kW, 4-pole	•
	15-22 kW, 2-pole 11 - 18.5 kW, 4-pole	-

The ramps determine how quickly the motor can accelerate and decelerate, during start-stop or setpoint changes.

You can set the following:

- acceleration time, 0.1 to 300 seconds
- deceleration time, 0.1 to 300 seconds.

The times apply to the acceleration from 0 rpm to fixed maximum speed and the deceleration from fixed maximum speed to 0 rpm.

At short deceleration times, the deceleration of the motor may depend on load and inertia as there is no possibility of actively braking the motor.

If the power supply is switched off, the deceleration of the motor only depends on load and inertia.

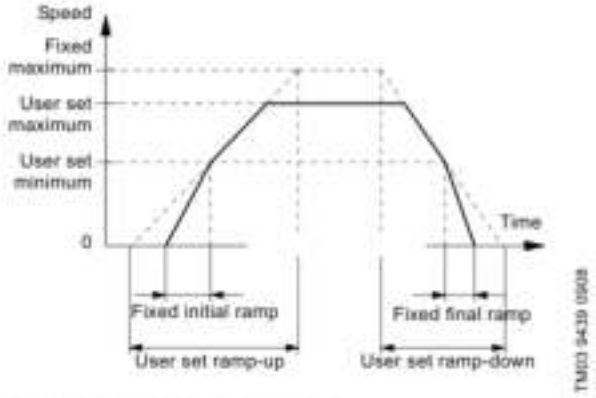

Fig. 83 Ramp-up and ramp-down

Factory setting

See *14. Factory settings of E-pumps* on page 122.

"Standstill heating"

Pump variant		"Standstill heating"
TPE3, TPE3 D		-
TPE2, TPE2 D		-
TPE Series 2000	0.12 - 11 kW, 2-pole 0.12 - 7.5 kW, 4-pole	•
	15-22 kW, 2-pole 11 - 18.5 kW, 4-pole	•
TPE Series 1000	0.12 - 11 kW, 2-pole 0.12 - 7.5 kW, 4-pole	•
	15-22 kW, 2-pole 11 - 18.5 kW, 4-pole	•

You can use this function to avoid condensation in humid environments. When you set the function to "Active" and the pump is in operating mode "Stop", a low AC voltage will be applied to the motor windings. The voltage is not high enough to make the motor rotate but ensures that sufficient heat is generated to avoid condensation in the motor including the electronic parts in the drive.

Note: Remember to remove the drain plugs and fit a cover over the motors.

Factory setting

See *14. Factory settings of E-pumps* on page 122.

"Alarm handling"

Pump variant		"Alarm handling"
TPE3, TPE3 D		-
TPE2, TPE2 D		-
TPE Series 2000	0.12 - 11 kW, 2-pole 0.12 - 7.5 kW, 4-pole	•
	15-22 kW, 2-pole 11 - 18.5 kW, 4-pole	-
TPE Series 1000	0.12 - 11 kW, 2-pole 0.12 - 7.5 kW, 4-pole	•
	15-22 kW, 2-pole 11 - 18.5 kW, 4-pole	-

The alarm handling determines how the pump must react in case of a sensor failure.

Input	Alarm handling
"Analog input 1" "Analog input 2" "Analog input 3" "Built-in Grundfos sensor" "Liqtec input"	**Warning**: no change of operation. **Stop**: an alarm is given, and the pump stops. **Min**: an alarm is given, and the pump reduces speed to minimum. **Max**: an alarm is given, a speed to maximum. **User-defined speed**: an alarm is given, and the pump runs at a speed set by the user.

"Motor bearing monitoring"

Pump variant		"Motor bearing monitoring"
TPE3, TPE3 D		-
TPE2, TPE2 D		-
TPE Series 2000	0.12 - 11 kW, 2-pole 0.12 - 7.5 kW, 4-pole	•
	15-22 kW, 2-pole 11 - 18.5 kW, 4-pole	•
TPE Series 1000	0.12 - 11 kW, 2-pole 0.12 - 7.5 kW, 4-pole	•
	15-22 kW, 2-pole 11 - 18.5 kW, 4-pole	•

You can set the motor bearing monitoring function to these values:

- "Active"
- "Not active"

When the function is set to "Active", a counter in the controller will start counting the mileage of the bearings.

The counter continues counting even if the function is changed to "Not active", but a warning is not given when it is time for replacement or relubrication.

When the function is changed to "Active again", the accumulated mileage is again used to calculate the replacement or relubrication time.

Factory setting

See *14. Factory settings of E-pumps* on page 122.

"Service"

Pump variant		"Service"
TPE3, TPE3 D		-
TPE2, TPE2 D		-
TPE Series 2000	0.12 - 11 kW, 2-pole 0.12 - 7.5 kW, 4-pole	•
	15-22 kW, 2-pole 11 - 18.5 kW, 4-pole	-
TPE Series 1000	0.12 - 11 kW, 2-pole 0.12 - 7.5 kW, 4-pole	•
	15-22 kW, 2-pole 11 - 18.5 kW, 4-pole	-

"Motor bearing monitoring" must be activated in order for the motor to indicate that bearings must be replaced or relubricated. See *"Motor bearing monitoring"* on page 86.

For motors of 7.5 kW and below, it is not possible to relubricate the bearings.

Bearings on motors of 11 kW and above can be relubricated.

"Time until next service" ("Motor bearing service")

This display shows when to replace or relubricate the motor bearings. The controller monitors the operating pattern of the motor and calculates the period between bearing replacements or relubrications.

Displayable values:

- "in 2 years"
- "in 1 year"
- "in 6 months"
- "in 3 months"
- "in 1 month"
- "in 1 week"
- "Now".

"Bearing replacements"

This display shows the number of bearing replacements that have been done during the lifetime of the motor.

"Bearings replaced" ("Motor bearing maintenance")

When the bearing monitoring function is active, the controller gives a warning when the motor bearings are to be replaced.

When you have replaced the motor bearings, confirm this action by pressing [Bearings replaced].

"Bearing relubrications"

The following applies only for 11 kW motors.

This display shows the number of bearing relubrications that have been done since the last bearing replacement.

"Bearings relubricated" (Motor bearing maintenance)

The following applies only for 11 kW motors.

When the bearing monitoring function is active, the controller gives a warning when the motor bearings are due to be relubricated.

When you have relubricated the motor bearings, press [Bearings relubricated].

The factory-set interval between relubrications is stated on the bearing nameplate which is placed on the motor. The relubrication interval can be changed by a Grundfos service technician.

It is possible to relubricate the bearings five times according to the preset interval. When the preset interval has been reached after the fifth relubrication, a warning will be given to replace the bearings.

Communication

"Number" ("Pump number")

Pump variant		Number
TPE3, TPE3 D		-
TPE2, TPE2 D		-
TPE Series 2000	0.12 - 11 kW, 2-pole 0.12 - 7.5 kW, 4-pole	•
	15-22 kW, 2-pole 11 - 18.5 kW, 4-pole	•
TPE Series 1000	0.12 - 11 kW, 2-pole 0.12 - 7.5 kW, 4-pole	•
	15-22 kW, 2-pole 11 - 18.5 kW, 4-pole	•

You can allocate a unique number to the pump. This makes it possible to distinguish between pumps in connection with bus communication.

Factory setting

See *14. Factory settings of E-pumps* on page 122.

"Radio communication" ("Enable/disable radio comm.")

Pump variant		"Radio communication"
TPE3, TPE3 D		-
TPE2, TPE2 D		-
TPE Series 2000	0.12 - 11 kW, 2-pole 0.12 - 7.5 kW, 4-pole	•
	15-22 kW, 2-pole 11 - 18.5 kW, 4-pole	-
TPE Series 1000	0.12 - 11 kW, 2-pole 0.12 - 7.5 kW, 4-pole	•
	15-22 kW, 2-pole 11 - 18.5 kW, 4-pole	-

You can set the radio communication to either enabled or disabled. You can use this function in areas where radio communication is not allowed.

IR communication remains active.

Factory setting

See *14. Factory settings of E-pumps* on page 122.

General settings

"Language"

Pump variant		"Language"
TPE3, TPE3 D		-
TPE2, TPE2 D		-
TPE Series 2000	0.12 - 11 kW, 2-pole 0.12 - 7.5 kW, 4-pole	•
	15-22 kW, 2-pole 11 - 18.5 kW, 4-pole	-
TPE Series 1000	0.12 - 11 kW, 2-pole 0.12 - 7.5 kW, 4-pole	•
	15-22 kW, 2-pole 11 - 18.5 kW, 4-pole	-

This menu is only available in the advanced control panel.

In this menu you can select the desired language. A number of languages are available.

"Date and time"

Pump variant		"Date and time"
TPE3, TPE3 D		-
TPE2, TPE2 D		-
TPE Series 2000	0.12 - 11 kW, 2-pole 0.12 - 7.5 kW, 4-pole	•
	15-22 kW, 2-pole 11 - 18.5 kW, 4-pole	-
TPE Series 1000	0.12 - 11 kW, 2-pole 0.12 - 7.5 kW, 4-pole	•
	15-22 kW, 2-pole 11 - 18.5 kW, 4-pole	-

You can set date and time as well as how they are to be shown in the display:

- "Select date format"
  "YYYY-MM-DD"
  "DD-MM-YYYY"
  "MM-DD-YYYY".
- "Select time format":
  "HH:MM 24-hour clock"
  "HH:MM am/pm 12-hour clock".
- "Set date"
- "Set time".

"Unit configuration" ("Units")

Pump variant		"Unit configuration"
TPE3, TPE3 D		-
TPE2, TPE2 D		-
TPE Series 2000	0.12 - 11 kW, 2-pole 0.12 - 7.5 kW, 4-pole	•
	15-22 kW, 2-pole 11 - 18.5 kW, 4-pole	-
TPE Series 1000	0.12 - 11 kW, 2-pole 0.12 - 7.5 kW, 4-pole	•
	15-22 kW, 2-pole 11 - 18.5 kW, 4-pole	-

In this menu you can select between SI and US units. The setting can be made generally for all parameters or customised for each parameter.

Factory setting

See *14. Factory settings of E-pumps* on page 122.

"Buttons on product" ("Enable/disable settings")

Pump variant		"Buttons on product"
TPE3, TPE3 D		-
TPE2, TPE2 D		-
TPE Series 2000	0.12 - 11 kW, 2-pole 0.12 - 7.5 kW, 4-pole	•
	15-22 kW, 2-pole 11 - 18.5 kW, 4-pole	•
TPE Series 1000	0.12 - 11 kW, 2-pole 0.12 - 7.5 kW, 4-pole	•
	15-22 kW, 2-pole 11 - 18.5 kW, 4-pole	•

In this display, you can disable the possibility of making settings.

Grundfos GO

If you set the buttons to "Not active", the buttons on the standard control panel are disabled. If you set the buttons to "Not active" on pumps with an advanced control panel, see below.

Advanced control panel

If you have disabled the settings, you can still use the buttons to navigate through the menus but you cannot make changes in the "Settings" menu.

When you have disabled the possibility to make settings, the 🔒 symbol appears in the display.

To unlock the pump and allow settings, press ˅ and ˄ simultaneously for at least 5 seconds.

Standard control panel

The button always remains active but you can only unlock all other buttons on the pump with Grundfos GO.

"Delete history"

Pump variant		"Delete history"
TPE3, TPE3 D		-
TPE2, TPE2 D		-
TPE Series 2000	0.12 - 11 kW, 2-pole 0.12 - 7.5 kW, 4-pole	•
	15-22 kW, 2-pole 11 - 18.5 kW, 4-pole	-
TPE Series 1000	0.12 - 11 kW, 2-pole 0.12 - 7.5 kW, 4-pole	•
	15-22 kW, 2-pole 11 - 18.5 kW, 4-pole	-

This menu is only available in the advanced control panel.

In this menu, you can delete the following historic data:

- "Delete work log."
- "Delete heat energy data"
- "Delete energy consumption".

"Define Home display"

Pump variant		"Define Home disolav"
TPE3, TPE3 D		-
TPE2, TPE2 D		-
TPE Series 2000	0.12 - 11 kW, 2-pole 0.12 - 7.5 kW, 4-pole	•
	15-22 kW, 2-pole 11 - 18.5 kW, 4-pole	-
TPE Series 1000	0.12 - 11 kW, 2-pole 0.12 - 7.5 kW, 4-pole	•
	15-22 kW, 2-pole 11 - 18.5 kW, 4-pole	-

This menu is only available in the advanced control panel.

In this menu, you can set the "Home" display to show up to four user-set parameters.

"Display settings"

Pump variant		"Display settings"
TPE3, TPE3 D		-
TPE2, TPE2 D		-
TPE Series 2000	0.12 - 11 kW, 2-pole 0.12 - 7.5 kW, 4-pole	•
	15-22 kW, 2-pole 11 - 18.5 kW, 4-pole	-
TPE Series 1000	0.12 - 11 kW, 2-pole 0.12 - 7.5 kW, 4-pole	•
	15-22 kW, 2-pole 11 - 18.5 kW, 4-pole	-

This menu is only available in the advanced control panel.

In this menu you can adjust the display brightness and set whether or not the display is to turn off if no buttons have been activated for a period of time.

"Store settings" ("Store actual settings")

Pump variant		"Store settings"
TPE3, TPE3 D		-
TPE2, TPE2 D		-
TPE Series 2000	0.12 - 11 kW, 2-pole 0.12 - 7.5 kW, 4-pole	•
	15-22 kW, 2-pole 11 - 18.5 kW, 4-pole	•
TPE Series 1000	0.12 - 11 kW, 2-pole 0.12 - 7.5 kW, 4-pole	•
	15-22 kW, 2-pole 11 - 18.5 kW, 4-pole	•

Grundfos GO

In this menu, you can store the actual settings for later use in the same pump or in other pumps of the same type.

Advanced control panel

In this menu, you can store the actual settings for later use in the same pump.

"Recall settings" ("Recall stored settings")

Pump variant		"Recall settings"
TPE3, TPE3 D		-
TPE2, TPE2 D		-
TPE Series 2000	0.12 - 11 kW, 2-pole 0.12 - 7.5 kW, 4-pole	•
	15-22 kW, 2-pole 11 - 18.5 kW, 4-pole	•
TPE Series 1000	0.12 - 11 kW, 2-pole 0.12 - 7.5 kW, 4-pole	•
	15-22 kW, 2-pole 11 - 18.5 kW, 4-pole	•

Grundfos GO

In this menu, you can recall stored settings from a number of previously stored settings that the pump then uses.

Advanced control panel

In this menu, you can recall the last stored settings that the pump then uses.

"Undo"

Pump variant		"Undo"
TPE3, TPE3 D		-
TPE2, TPE2 D		-
TPE Series 2000	0.12 - 11 kW, 2-pole 0.12 - 7.5 kW, 4-pole	•
	15-22 kW, 2-pole 11 - 18.5 kW, 4-pole	•
TPE Series 1000	0.12 - 11 kW, 2-pole 0.12 - 7.5 kW, 4-pole	•
	15-22 kW, 2-pole 11 - 18.5 kW, 4-pole	•

This menu is only available in Grundfos GO.

In this display, you can undo all settings that have been made with Grundfos GO in the current communication session. You cannot undo a "Recall stored settings" action.

"Pump name"

Pump variant		"Pump name"
TPE3, TPE3 D		-
TPE2, TPE2 D		-
TPE Series 2000	0.12 - 11 kW, 2-pole 0.12 - 7.5 kW, 4-pole	•
	15-22 kW, 2-pole 11 - 18.5 kW, 4-pole	-
TPE Series 1000	0.12 - 11 kW, 2-pole 0.12 - 7.5 kW, 4-pole	•
	15-22 kW, 2-pole 11 - 18.5 kW, 4-pole	-

This menu is only available in Grundfos GO.

In this display, you can give the pump a name. In this way, you can easily identify the pump when connecting with Grundfos GO.

Factory setting

See *14. Factory settings of E-pumps* on page 122.

"Connection code"

Pump variant		"Connection code"
TPE3, TPE3 D		-
TPE2, TPE2 D		-
TPE Series 2000	0.12 - 11 kW, 2-pole 0.12 - 7.5 kW, 4-pole	•
	15-22 kW, 2-pole 11 - 18.5 kW, 4-pole	-
TPE Series 1000	0.12 - 11 kW, 2-pole 0.12 - 7.5 kW, 4-pole	•
	15-22 kW, 2-pole 11 - 18.5 kW, 4-pole	-

This menu is only available in Grundfos GO.

You can set a connection code to avoid having to press the connection button each time and to restrict remote access to the product.

Setting the code in the product using Grundfos GO

1. Connect Grundfos GO to the product.
2. In the product dashboard, select "Settings".
3. Choose "Connection code".
4. Enter the wanted code and press [OK].
   The code must be a character string, ASCII. You can always modify the code. The old code is not needed.

Setting the code in Grundfos GO

You can set a default connection code in Grundfos GO so that it automatically attempts to connect to the selected product via this code.

When you select a product with the same connection code in Grundfos GO, Grundfos GO automatically connects to the product and you do not have to press the connection button on the module.

Set the default code in Grundfos GO in this way:

1. In the main menu, under "General", select "Settings".
2. Choose "Remote".
3. Enter the connection code in the field "Preset connection code". The field now says "Connection code set".

You can always modify the default connection code by pressing [Delete] and entering a new one.

If Grundfos GO fails to connect and ask you to press the connection button on the product, it means that the product has no connection code or has a different connection code. In this case, you can only establish connection via the connection button.

After setting a connection code, you must switch off the product until the light in Grundfos Eye turns off before you can use the new connection code.

Factory setting

See *14. Factory settings of E-pumps* on page 122.

"Run startup guide"

Pump variant		"Run startup guide"
TPE3, TPE3 D		-
TPE2, TPE2 D		-
TPE Series 2000	0.12 - 11 kW, 2-pole 0.12 - 7.5 kW, 4-pole	•
	15-22 kW, 2-pole 11 - 18.5 kW, 4-pole	-
TPE Series 1000	0.12 - 11 kW, 2-pole 0.12 - 7.5 kW, 4-pole	•
	15-22 kW, 2-pole 11 - 18.5 kW, 4-pole	-

This menu is only available in the advanced control panel.

The startup guide automatically starts when you start the pump for the first time.

You can always run the startup guide later via this menu.

The startup guide guides you through the general settings of the pump.

- "Language". See *"Language"* on page 88.
- "Select date format".*
  See *"Date and time"* on page 88.
- "Set date".*
  See *"Date and time"* on page 88.
- "Select time format".*
  See *"Date and time"* on page 88.
- "Set time".*
  See *"Date and time"* on page 88.
- "Setting of pump"
  - "Go to Home"
  - "Run with Constant curve" / "Run with Constant pressure".
    See *"Control mode"* on page 63
  - "Go to Assisted pump setup".
    See *"Assisted pump setup"* on page 92.
  - "Return to factory settings".

* Applies only for pumps with advanced functional module, FM 300. For further information, see *Identification of functional module* on page 152.

"Alarm log"

Pump variant		"Alarm log"
TPE3, TPE3 D		-
TPE2, TPE2 D		-
TPE Series 2000	0.12 - 11 kW, 2-pole 0.12 - 7.5 kW, 4-pole	•
	15-22 kW, 2-pole 11 - 18.5 kW, 4-pole	-
TPE Series 1000	0.12 - 11 kW, 2-pole 0.12 - 7.5 kW, 4-pole	•
	15-22 kW, 2-pole 11 - 18.5 kW, 4-pole	-

This menu contains a list of logged alarms from the product. The log shows the name of the alarm, when the alarm occurred and when it was reset.

"Warning log"

Pump variant		"Warning log"
TPE3, TPE3 D		-
TPE2, TPE2 D		-
TPE Series 2000	0.12 - 11 kW, 2-pole 0.12 - 7.5 kW, 4-pole	•
	15-22 kW, 2-pole 11 - 18.5 kW, 4-pole	-
TPE Series 1000	0.12 - 11 kW, 2-pole 0.12 - 7.5 kW, 4-pole	•
	15-22 kW, 2-pole 11 - 18.5 kW, 4-pole	-

This menu contains a list of logged warnings from the product. The log shows the name of the warning, when the warning occurred and when it was reset.

"Assist"

Pump variant		"Assist"
TPE3, TPE3 D		-
TPE2, TPE2 D		-
TPE Series 2000	0.12 - 11 kW, 2-pole 0.12 - 7.5 kW, 4-pole	•
	15-22 kW, 2-pole 11 - 18.5 kW, 4-pole	-
TPE Series 1000	0.12 - 11 kW, 2-pole 0.12 - 7.5 kW, 4-pole	•
	15-22 kW, 2-pole 11 - 18.5 kW, 4-pole	-

The menu consist of functions which take you through the steps needed to set the pump.

"Assisted pump setup"

Pump variant		"Assisted pump setup"
TPE3, TPE3 D		-
TPE2, TPE2 D		-
TPE Series 2000	0.12 - 11 kW, 2-pole 0.12 - 7.5 kW, 4-pole	•
	15-22 kW, 2-pole 11 - 18.5 kW, 4-pole	-
TPE Series 1000	0.12 - 11 kW, 2-pole 0.12 - 7.5 kW, 4-pole	•
	15-22 kW, 2-pole 11 - 18.5 kW, 4-pole	-

The menu guides you through the following:

Setting of pump

- Selection of control mode. See page 63.
- Configuration of feedback sensors.
- Adjusting the setpoint. See page 62.
- Controller settings. See page 79.
- Summary of settings.

Example of how to use the "Assisted pump setup" for setting up the pump to constant pressure:

Grundfos GO

1. Open the "Assist" menu.
2. Select "Assisted pump setup".
3. Select the control mode "Constant pressure".
4. Read the description of this control mode.
5. Select which analog input to use as sensor input.
6. Select sensor function according to where the sensor is installed in the system. See fig. 69.
7. Select electrical input signal according to the sensor specifications.
8. Select measuring unit according to the sensor specifications.
9. Set the minimum and maximum sensor values according to the sensor specifications.
10. Set the desired setpoint.
11. Set the controller settings K_p and T_i. See the recommendations in section *"Controller" ("Controller settings")* on page 79.
12. Type the pump name.
13. Check the summary of settings and confirm them.

Advanced control panel

1. Open the "Assist" menu.
2. Select "Assisted pump setup".
3. Select the control mode "Const. pressure".
4. Select which analog input to use as sensor input.
5. Select the measured parameter to be controlled. See fig. 69.
6. Select measuring unit according to the sensor specifications.
7. Set the minimum and maximum sensor values according to the sensor specifications.
8. Select electrical input signal according to the sensor specifications.
9. Set the setpoint.
10. Set the controller settings K_p and T_i. See recommendations in section *"Controller" ("Controller settings")* on page 79.
11. Check the summary of settings and confirm them by pressing [OK].

"Setup, analog input"

Pump variant		"Setup, analog input"
TPE3, TPE3 D		-
TPE2, TPE2 D		-
TPE Series 2000	0.12 - 11 kW, 2-pole 0.12 - 7.5 kW, 4-pole	•
	15-22 kW, 2-pole 11 - 18.5 kW, 4-pole	-
TPE Series 1000	0.12 - 11 kW, 2-pole 0.12 - 7.5 kW, 4-pole	•
	15-22 kW, 2-pole 11 - 18.5 kW, 4-pole	-

This menu is only available in the advanced control panel.

The menu guides you through the following:

"Setup, analog input"

- Analog inputs 1 to 3. See page 72.
- Pt100/1000 input 1 and 2. See page 74.
- Adjusting the setpoint. See page 62.
- Summary.

"Setting of date and time"

Pump variant		"Setting of date and time"
TPE3, TPE3 D		-
TPE2, TPE2 D		-
TPE Series 2000	0.12 - 11 kW, 2-pole 0.12 - 7.5 kW, 4-pole	•
	15-22 kW, 2-pole 11 - 18.5 kW, 4-pole	-
TPE Series 1000	0.12 - 11 kW, 2-pole 0.12 - 7.5 kW, 4-pole	•
	15-22 kW, 2-pole 11 - 18.5 kW, 4-pole	-

This menu guides you through the following:

- "Select date format". See *"Date and time"* on page 88.
- "Set date". See *"Date and time"* on page 88.
- "Select time format". See *"Date and time"* on page 88.
- "Set time". See *"Date and time"* on page 88.

"Multipump setup" ("Setup of multi-pump system")

Pump variant		"Multipump setup"
TPE3, TPE3 D		-
TPE2, TPE2 D		-
TPE Series 2000	0.12 - 11 kW, 2-pole 0.12 - 7.5 kW, 4-pole	•
	15-22 kW, 2-pole 11 - 18.5 kW, 4-pole	-
TPE Series 1000	0.12 - 11 kW, 2-pole 0.12 - 7.5 kW, 4-pole	•
	15-22 kW, 2-pole 11 - 18.5 kW, 4-pole	-

The multipump function enables the control of two pumps connected in parallel without the use of external controllers. The pumps in a multipump system communicate with each other via the wireless GENIair connection or the wired GENI connection.

A multipump system is set via a selected pump, that is the master pump, which is the first selected pump.

If two pumps in the system are configured with an outlet-pressure sensor, both pumps can function as master pumps and take over the master pump function if the other fails. This provides additional redundancy in the multipump system.

The multipump functions are described in the following sections.

"Alternating operation"

Alternating operation functions as a duty-standby operating mode and is possible with two pumps of same size and type connected in parallel. The main purpose of the function is to ensure an even amount of running hours and to ensure that the standby pump takes over if the running pump stops due to an alarm.

Each pump requires a non-return valve in series with the pump.

You can choose between two alternating operation modes:

- Alternating operation, time
  Pump changeover to the other is based on time.
- Alternating operation, energy
  Pump changeover to the other is based on energy consumption.

If the duty pump fails, the other pump takes over automatically.

"Backup operation"

Backup operation is possible with two pumps of same size and type connected in parallel. Each pump requires a non-return valve in series with the pump.

One pump is operating continuously. The backup pump is operated for a short time each day to prevent seizing up. If the duty pump stops due to a fault, the backup pump starts automatically.

"Cascade operation"

Cascade operation ensures that the pump performance is automatically adapted to the consumption by switching pumps on or off. The system thus runs as energy-efficiently as possible with a constant pressure and a limited number of pumps.

When a twin-head pump is running in constant-pressure control mode, the second pump head starts at 90 % and stops at 50 % performance.

All pumps in operation run at equal speed. Pump changeover is automatic and depends on energy, operating hours and fault.

Pump system:

- Twin-head pump.
- Two or four single-head pumps connected in parallel.
  The pumps must be of the same type and size.
  Each pump requires a non-return valve in series with the pump.

Set the control mode to "Const. pressure" or "Const. curve".

This function is available with up to 4 motors installed in parallel. The motors must be of the same size and the pumps must be of the same model.

- The performance is adjusted to the demand through cutting pumps in or out and through parallel control of the pumps in operation.
- The controller maintains a constant pressure through continuous adjustment of the speed of the pumps.
- Pump changeover is automatic and depends on load, operating hours and fault detection.
- All pumps in operation run at the same speed.
- The number of pumps in operation also depends on the energy consumption of the pumps. If only one pump is required, two pumps will run at a lower speed if this results in a lower energy consumption.
- If several motors in the system have a sensor, they can all function as master and take over the master function if the other fails.

"Sensor to be used"

Define the sensor to be used for controlling the pump system. If a sensor is placed in a way that it is able to measure the sensor output from all pumps in the system, for example, in the manifold, then select "Master pump sensor".

If a sensor is placed on, or across the individual pumps, for example, installed behind non-return valves and not able to measure the sensor output from all pumps, then select "Running pump sensor".

Setting a multipump system

You can set a multipump system in the following ways:

- *Grundfos GO and wireless pump connection*
- *Grundfos GO and wired pump connection*
- *Advanced control panel and wireless pump connection*
- *Advanced control panel and wired pump connection*.

See step-by-step descriptions below.

Grundfos GO and wireless pump connection

1. Power on both pumps.
2. Establish contact to one of the pumps with Grundfos GO.
3. Set the needed analog and digital inputs via Grundfos GO according to the connected equipment and the required functionality. See *"Assisted pump setup"* on page 92.
4. Assign a pump name to the pump using Grundfos GO. See *"Pump name"* on page 90.
5. Disconnect Grundfos GO from the pump.
6. Establish contact to the other pump.
7. Set the needed analog and digital inputs via Grundfos GO according to the connected equipment and the required functionality. See *"Assisted pump setup"* on page 92.
8. Assign a pump name to the pump using Grundfos GO. See *"Pump name"* on page 90.
9. Select the "Assist" menu and "Multipump setup".
10. Select the desired multipump function. See *"Alternating operation"* on page 93, *"Backup operation"* on page 93 and *"Cascade operation"* on page 94.
11. Press [>] to continue.
12. Set the time for pump changeover such as the time at which the alternation between the two pumps is to take place. This step applies only if you have selected "Alternating operation, time" and if the pumps are fitted with FM 300.
13. Press [>] to continue.
14. Select "Radio" as the communication method to be used between the two pumps.
15. Press [>] to continue.
16. Press "Select pump 2".
17. Select the pump from the list.
    Use the [OK] or button to identify the pump.
18. Press [>] to continue.
19. Confirm the multipump setup by pressing [Send].
20. Press [Finish] in the "Setup complete" dialog box.
21. Wait for the green indicator light in the middle of Grundfos Eye to light up.

The multipump system has now been set.

Grundfos GO and wired pump connection

1. Connect the two pumps with each other with a 3-core screened cable between the GENIbus terminals A, Y, B.
2. Power on both pumps.
3. Establish contact to one of the pumps with Grundfos GO.
4. Set the needed analog and digital inputs via Grundfos GO according to the connected equipment and the required functionality. See *"Assisted pump setup"* on page 92.
5. Assign a pump name to the pump using Grundfos GO. See *"Pump name"* on page 90.
6. Assign pump number 1 to the pump. See *"Number" ("Pump number")* on page 87.
7. Disconnect Grundfos GO from the pump.
8. Establish contact to the other pump.
9. Set the needed analog and digital inputs via Grundfos GO according to the connected equipment and the required functionality. See *"Assisted pump setup"* on page 92.
10. Assign a pump name to the pump using Grundfos GO. See *"Pump name"* on page 90.
11. Assign pump number 2 to the pump. See *"Number" ("Pump number")* on page 87.
12. Select the "Assist" menu and choose "Multipump setup".
13. Select the desired multipump function. See *"Alternating operation"* on page 93, *"Backup operation"* on page 93 and *"Cascade operation"* on page 94.
14. Press [>] to continue.
15. Set the time for pump changeover such as the time at which the alternation between the two pumps is to take place. This step applies only if you have selected "Alternating operation, time" and if the pumps are fitted with FM 300.
16. Press [>] to continue.
17. Select "BUS cable" as the communication method to be used between the two pumps.
18. Press [>] to continue.
19. Press "Select pump 2".
20. Select the additional pump from the list.
    Use the [OK] or button to identify the additional pump.
21. Press [>] to continue.
22. Press [Send].
23. Press [Finish] in the "Setup complete" dialog box.
24. Wait for the green indicator light in the middle of Grundfos Eye to light up.

The multipump system has now been set.

Advanced control panel and wireless pump connection

1. Power on both pumps.
2. On both pumps, set the needed analog and digital inputs according to the connected equipment and the required functionality. See *"Assisted pump setup"* on page 92.
3. Select the "Assist" menu on one of the pumps and choose "Setup of multi-pump system".
4. Press [>] to continue.
5. Select "Wireless" as the communication method to be used between the two pumps.
6. Press [>] to continue.
7. Select the desired multipump function. See *"Alternating operation"* on page 93, *"Backup operation"* on page 93 and *"Cascade operation"* on page 94.
8. Press [>] three times to continue.
9. Press [OK] to search for other pumps.
   The green indicator light in the middle of Grundfos Eye flashes on the other pumps.
10. Press the connect button on the pump which is to be added to the multipump system.
11. Press [>] to continue.
12. Set the time for pump changeover i.e. the time at which the alternation between the two pumps is to take place. This step applies only if you have selected "Alternating operation, time" and if the pumps are fitted with FM 300.
13. Press [>] to continue.
14. Press [OK].
    The multipump function icons appear in the bottom of the control panels.

The multipump system has now been set.

Advanced control panel and wired pump connection

1. Connect the two pumps with each other with a 3-core screened cable between the GENIbus terminals A, Y, B.
2. Set the needed analog and digital inputs according to the connected equipment and the required functionality. See *"Assisted pump setup"* on page 92.
3. Assign pump number 1 to the first pump. See *"Number" ("Pump number")* on page 87.
4. Assign pump number 2 to the other pump. See *"Number" ("Pump number")* on page 87.
5. Select the "Assist" menu on one of the pumps and choose "Setup of multi-pump system".
6. Press [>] to continue.
7. Select "Wired GENIbus" as the communication method to be used between the two pumps.
8. Press [>] twice to continue.
9. Select the desired multipump function. See *"Alternating operation"* on page 93, *"Backup operation"* on page 93 and *"Cascade operation"* on page 94.
10. Press [>] to continue.
11. Press [OK] to search for other pumps.
12. Select the additional pump from the list.
13. Press [>] to continue.
14. Set the time for pump changeover i.e. the time at which the alternation between the two pumps is to take place.
    This step applies only if you have selected "Alternating operation, time" and if the pumps are fitted with FM 300.
15. Press [>] to continue.
16. Press [OK].
    The multipump function icon appears in the bottom of the control panels.

The multipump system has now been set.

Disabling the multipump function via Grundfos GO

1. Select the "Assist" menu.
2. Select "Multipump setup".
3. Select "Disable".
4. Press [>] to continue.
5. Confirm the multipump setup by pressing [Send].
6. Press [Finish].

The multipump function has now been disabled.

Disabling a multipump via advanced control panel

1. Select the "Assist" menu.
2. Select "Setup of multi-pump system".
3. Press [>] to continue.
4. Confirm "No multi-pump function" by pressing [OK].
5. Press [>] to continue.
6. Press [OK].

The multipump system has now been disabled.

"Description of control mode"

Pump variant		"Description of control mode"
TPE3, TPE3 D		-
TPE2, TPE2 D		-
TPE Series 2000	0.12 - 11 kW, 2-pole 0.12 - 7.5 kW, 4-pole	•
	15-22 kW, 2-pole 11 - 18.5 kW, 4-pole	-
TPE Series 1000	0.12 - 11 kW, 2-pole 0.12 - 7.5 kW, 4-pole	•
	15-22 kW, 2-pole 11 - 18.5 kW, 4-pole	-

This menu is only available in the advanced control panel.

This menu describes each of the possible control modes. See also section *"Control mode"* on page 63.

"Assisted fault advice"

Pump variant		"Assisted fault advice"
TPE3, TPE3 D		-
TPE2, TPE2 D		-
TPE Series 2000	0.12 - 11 kW, 2-pole 0.12 - 7.5 kW, 4-pole	•
	15-22 kW, 2-pole 11 - 18.5 kW, 4-pole	-
TPE Series 1000	0.12 - 11 kW, 2-pole 0.12 - 7.5 kW, 4-pole	•
	15-22 kW, 2-pole 11 - 18.5 kW, 4-pole	-

This menu gives guidance and corrective actions in case of pump failures.

Priority of settings

You can always set the pump to stop by pressing on the pump control panel. When the pump is not in "Stop" mode, you can always stop the pump by continuously pressing . Furthermore, you can set the pump to maximum speed by continuously pressing . You can always set the pump to operation at maximum speed or to stop with Grundfos GO.

If two or more functions are enabled at the same time, the pump will operate according to the function with the highest priority.

Example

If you have set the pump to maximum speed via the digital input, the pump control panel or Grundfos GO can only set the pump to "Manual" or "Stop".

The priority of the settings appears from the table below.

Priority	Start-stop button	Grundfos GO or control panel on the motor	Digital input	Bus communication
1	"Stop"			
2		"Stop"*		
3		"Manual"		
4		"Max. speed"*/ "User-defined speed"		
5			"Stop"	–
6			"User-defined speed"	
7				"Stop"
8				"Max. speed"
9				"Min. speed"
10				"Start"
11			"Max. speed"	
12		"Min. speed"		
13		–	"Min. speed"	–
14			"Start"	
15		"Start"		

* "Stop" and "Max. speed" settings made with Grundfos GO or on the motor control panel can be overruled by another operating-mode command sent from a bus, for example "Start". If the bus communication is interrupted, the motor resumes its previous operating mode, for example "Stop", selected with Grundfos GO or on the motor control panel.

Grundfos Eye

The operating condition of the motor is indicated by Grundfos Eye on the control panel. See fig. 84 (A).

Fig. 84 Grundfos Eye

Grundfos Eye	Indication	Description
	No lights are on.	The power is off. The pump is not running.
	The two opposite green indicator lights are rotating in the direction of rotation of the pump when seen from the non-drive end.	The power is on. The pump is running.
	The two opposite green indicator lights are permanently on.	The power is on. The pump is not running.
	One yellow indicator light is rotating in the direction of rotation of the pump when seen from the non-drive end.	Warning. The pump is running.
	One yellow indicator light	Warning. The pump has stopped.
	The two opposite red indicator lights flash simultaneously.	Alarm. The pump has stopped.
	The green indicator light in the middle flashes quickly four times.	This is a feedback signal which the pump gives in order to ensure identification of itself.
	The green indicator light in the middle flashes continuously.	Grundfos GO or another pump is trying to communicate with the pump. Press on the pump control panel to allow communication.
	The green indicator light in the middle is permanently on.	Remote control with Grundfos GO via radio. The pump is communicating with Grundfos GO via radio connection.
	The green indicator light in the middle flashes quickly while Grundfos Go is exchanging data with the pump. It takes a few seconds.	Remote control with Grundfos GO via infrared light. The pump is receiving data from Grundfos GO via infrared communication.

Indicator lights and signal relays

The following applies to the pumps below:

- TPE3, TPE3 D pumps
- TPE2, TPE2 D pumps
- TPE Series 1000 and 2000 pumps with the following motor sizes:
  0.12 - 11 kW, 2-pole
  0.12 - 7.5 kW, 4-pole.

The pump has two outputs for potential-free signals via two internal relays.

You can set the signal outputs to "Operation", "Pump running", "Ready", "Alarm" and "Warning".

The functions of the two signal relays appear from the table below:

Description	Grundfos Eye	Contact position for signal relays when activated					"Operating mode"
		"Operation"	"Pump running"	"Ready"	"Alarm"	"Warning"	
The power is off.	Off	C NO NC	C NO NC	C NO NC	C NO NC	C NO NC	-
The pump runs in "Normal" mode.	Green, rotating	C NO NC	C NO NC	C NO NC	C NO NC	C NO NC	"Normal", "Min." or "Max."
The pump runs in "Manual" mode.	Green, rotating	C NO NC	C NO NC	C NO NC	C NO NC	C NO NC	"Manual"
The pump is in operating mode "Stop".	Green, steady	C NO NC	C NO NC	C NO NC	C NO NC	C NO NC	"Stop"
Warning, but the pump runs.	Yellow, rotating	C NO NC	C NO NC	C NO NC	C NO NC	C NO NC	"Normal", "Min." or "Max."
Warning, but the pump runs in "Manual" mode.	Yellow, rotating	C NO NC	C NO NC	C NO NC	C NO NC	C NO NC	"Manual"
Warning, but the pump was stopped via "Stop" command.	Yellow, steady	C NO NC	C NO NC	C NO NC	C NO NC	C NO NC	"Stop"
Alarm, but the pump runs.	Red, rotating	C NO NC	C NO NC	C NO NC	C NO NC	C NO NC	"Normal," "Min." or "Max."
Alarm, but the pump runs in "Manual" mode.	Red, rotating	C NO NC	C NO NC	C NO NC	C NO NC	C NO NC	"Manual"
The pump has stopped due to an alarm.	Red, flashing	C NO NC	C NO NC	C NO NC	C NO NC	C NO NC	"Stop"

The following applies to the pumps below:

- TPE Series 1000 and 2000 pumps with the following motor sizes:
  15-22 kW, 2-pole
  11 - 18.5 kW, 4-pole.

The operating condition of the pump is indicated by the green (A) and red (B) indicator lights on the pump control panel and inside the terminal box. See fig. 85.

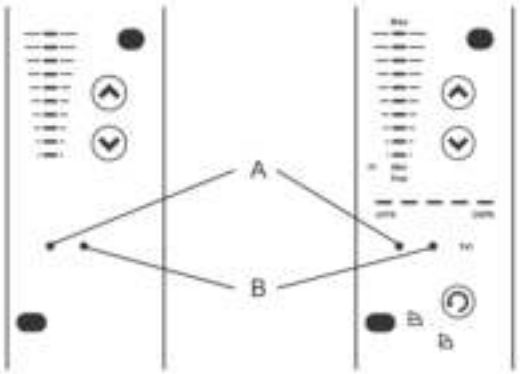

Fig. 85 Position of indicator lights

Furthermore, the pump incorporates an output for a potential-free signal via an internal relay.

The functions of the two indicator lights and the signal relay are as shown in the following table:

Indicator lights		Signal relay activated during:				
Fault red	Operation green	Fault", "Alarm", "Warning" and "Relubricate"	Operating"	Ready"	Pump running"	Description
Off	Off					The power supply has been switched off.
Off	Permanently on					The pump runs.
Off	Flashing					The pump has been set to stop.
Permanently on	Off					The pump has stopped because of a "Fault" or "Alarm". Or the pump runs with a "Warning" or "Relubricate" indication. If the pump was stopped, restarting will be attempted. It may be necessary to restart the pump by resetting the "Fault" indication.
Permanently on	Permanently on					The pump runs, but it has or has had a "Fault" or "Alarm" allowing the pump to continue operation. Or the pump runs with a "Warning" or "Relubricate" indication. If the cause is "Sensor signal outside signal range", the pump continues to run according to the maximum curve, and you cannot reset the fault indication until the signal is inside the signal range. If the cause is "Setpoint signal outside signal range", the pump continues to run according to the minimum curve, and you cannot reset the fault indication until the signal is inside the signal range.
Permanently on	Flashing					The pump has been set to stop, but it has been stopped because of a "Fault".

Resetting of fault indication

You can reset a fault indication in one of the following ways:

- Briefly press ⊛ or ⊛ on the pump. This will not change the setting of the pump.
  A fault indication cannot be reset by means of ⊛ or ⊛ if the buttons have been locked.
- Switch off the power supply until the indicator lights are off.
- Switch the external start-stop input off and then on again.
- Use Grundfos GO.

13. User interfaces for TPE pumps 30-55 kW, 2-pole and 22-55 kW, 4-pole

TPE pumps 30-55 kW, 2-pole and 22-55 kW, 4-pole have Siemens motors with integrated CUE frequency converters. The frequency converter part of the TPE Series 2000 and TPE Series1000 will in the following descriptions be named as CUE.

Default control mode made in TPE Series 1000:

- Open loop.

Default control mode made in TPE Series 2000:

- Proportional differential pressure.

User interface

The user interface offers these possibilities:

- Local operation via an operating panel with graphic display.
- Remote operation via external signals, for instance via digital inputs or GENIbus.
- Monitoring of operating status via indicator lights and signal relays.

Display of alarms or warnings and logging.

Operation/display

CUE offers a wide range of data readouts representing the operating conditions of the CUE itself, the motor, the pump, and the system. All these data readouts are available by entering the [Main] menu parameter group 16-xx "Data Readouts":

- 16-1x "General Status"
- 16-2x "Motor Status"
- 16-3x "Drive Status"
- 16-5x "Setpoint and Feedback"
- 16-6x "Inputs and Outputs"
- 16-8x "Fieldbus and GENI port"
- 19-9x "Diagnostics readouts".

CUE [Status] screen shows up to five operational information. These can be adjusted in [Main] menu parameters 0-2x.

Position	Parameter	Default
21	0-20 Display line 1.1 Small	External setpoint
20	0-20 Display line 1.2 Small	Actual setpoint
1	0-20 Display line 1.3 Small	Speed [RPM]
19	0-23 Display Line 2 Large	Operating mode
2	0-23 Display Line 3 Large	Control mode

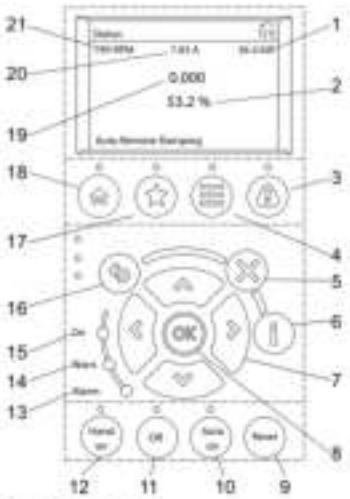

Fig. 86 Operating panel

Password protection

Password numbers can be used to protect the [Main] and [Favourites] menus as well as operating keys [Hand on], [Off], [Auto On] and [Reset].

Restricted access is set for [Main] menu in parameter 0-61 and for [Favourites] menu in parameter 0-66. Select Full access [0] to disable the password defined in parameter 0-60 and 0-65, respectively. Select Read only [1] to prevent unauthorised editing of parameters. Select No access [2] to prevent unauthorised viewing and editing of parameters.

Restricted use of operating keys [Hand on], [Off], [Auto On] and [Reset] is set in parameter group 0-4x. Select Disabled [0] to avoid accidental use of the key. Select Password [2] to avoid unauthorised use of the key.

Inputs and outputs

CUE is equipped with a number of inputs and outputs:

- 1 RS-485 GENIbus connection
- 1 analog input, 0-10 V, 0/4-20 mA
  – external setpoint
- 1 analog input, 0-10 V, 0/4-20 mA
  – sensor input, feedback sensor
- 1 analog output, 0-20 mA
- 6 digital inputs
  – 2 inputs can be changed to digital outputs
  – all digital inputs and outputs are programmable
- 2 signal relays (C/NO/NC)
  – programmable.

Accessories

Grundfos offers a number of accessories for CUE. See *CUE accessories* on page 274.

MCB 114 sensor input module

MCB 114 is an option offering additional analog inputs for CUE:

- 1 analog input, 0/4-20 mA
- 2 inputs for Pt100/Pt1000 temperature sensors.

MCO 101 multipump module

MCO 101 is an option offering cascade of multiple CUEs:

- cascade of up to 6 CUEs. Only possible with the Constant pressure control mode.

Operating modes

These operating modes can be selected with CUE:

- Normal
- Stop
- Min. curve
- Max. curve
- User curve.

The operating modes are set on the operating panel by using the [Favourites] menu. The operating modes can be set without changing the setpoint setting.

Normal

The pump operates in the selected control mode.

The control modes are different ways of controlling the pump speed when the operating mode is set to "Normal".

Stop

The pump has been stopped by the user.

Min. curve

The pump is running at a set minimum speed. See fig. 87.

For instance, this operating mode can be used during periods with a very small flow requirement.

Max. curve

The pump is running at a set maximum speed. See fig. 87.

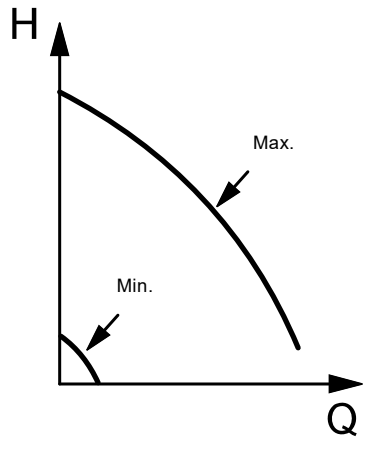

Fig. 87 Min. and max. curves

User curve

The pump is running at a user-defined speed.

Control modes

CUE has a built-in PID controller that provides closed-loop control of the value you want to control. CUE can also be set to open-loop control where the setpoint represents the desired pump speed. The control modes are set on the operating panel in the startup guide or changed using the [Favourites] menu.

Open loop is typically used without a sensor. All the other control modes require a sensor.

Open loop, constant curve

The speed is kept at a set value in the range between the minimum and maximum curves. See fig. 88.

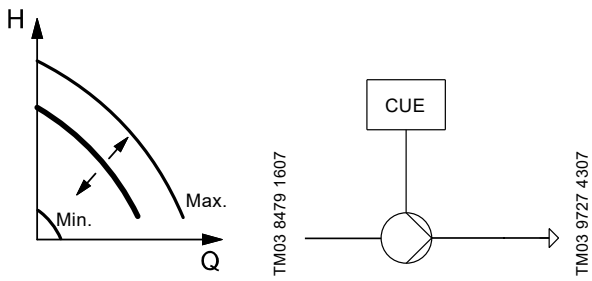

Fig. 88 Open loop, constant curve

In the "Open loop" control mode, the setpoint is set in percentage of the nominal speed. The setting range is between the minimum and maximum curves.

Operation on constant curve can, for instance, be used for pumps with no sensor connected.

This control mode is also typically used in connection with an overall control system such as Control MPC or another external controller.

Constant pressure

The outlet pressure is kept constant, independently of the flow rate. See fig. 89.

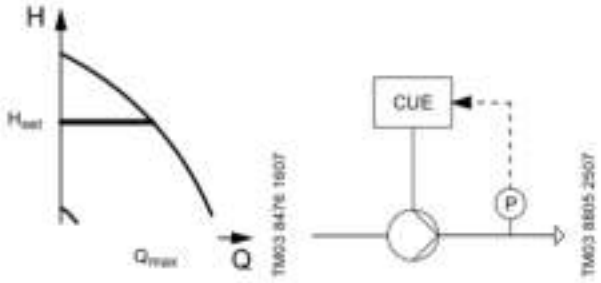

Fig. 89 Constant pressure

The pump is controlled according to a constant pressure measured after the pump. This means that the pump offers a constant pressure in the Q-range of 0 to $Q_{max.}$, represented by the horizontal line in the QH diagram.

Constant pressure with stop function

The outlet pressure is kept constant at high flow rate ($Q > Q_{min}$). On/off operation at low flow rate. See fig. 90.

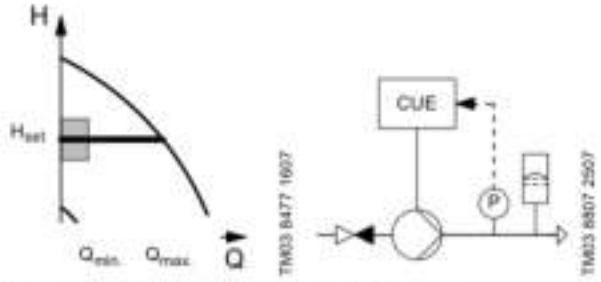

Fig. 90 Constant pressure with stop function

The pump is controlled according to a constant pressure measured after the pump. This means that the pump offers a constant pressure in the Q-range of Q_{min} to $Q_{max.}$, represented by the horizontal line in the QH diagram.

The Stop function is activated by default for constant pressure, but can be deactivated in parameter 200-19 "Stop function".

The purpose of the Stop function is to stop the pump when low or no flow is detected. When low flow is detected, the pump is in On/off operation. If there is flow, the pump continues to operate according to the setpoint. See fig. 91.

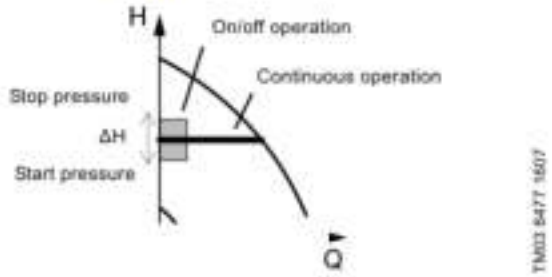

Fig. 91 Constant pressure with stop function. Difference between start and stop pressures (ΔH)

Low flow can be detected in two different ways:

- with the built-in low-flow detection function
- with a flow switch connected to a digital input.

The low-flow detection function checks the flow regularly by reducing the speed for a short time. No or only a small change in pressure means that there is a low flow.

When a flow switch detects low flow, the digital input is activated.

It is only possible to use the stop function if the system incorporates these components:

- a pressure sensor
- a non-return valve
- a diaphragm tank.

The non-return valve must always be installed in front of the pressure sensor. See figs 92 and 93.

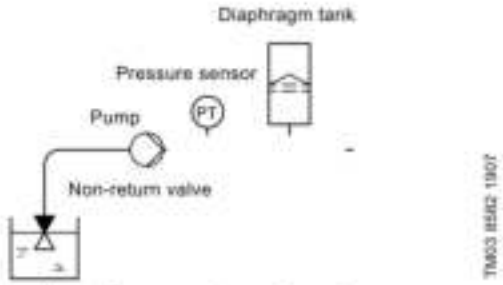

Fig. 92 Position of the non-return valve and pressure sensor in a system with suction lift

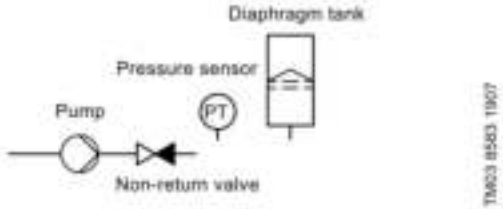

Fig. 93 Position of the non-return valve and pressure sensor in a system with positive inlet pressure

The Stop function requires a diaphragm tank of a certain minimum size. The tank must be installed as close as possible after the pump, and the precharge pressure must be 0.7 x actual setpoint.

Recommended diaphragm tank sizes:

Rated flow rate of the pump [m^3/h (gpm)]	Typical diaphragm tank size [litres (gallons)]
0-6 (0-26)	8 (2)
7-24 (26-110)	18 (5)
25-40(110-180)	50 (13)
41-70 (180-310)	120 (32)
71-100 (310-440)	180 (48)

If a diaphragm tank of the above size is installed in the system, the factory setting of ΔH is the correct setting. If the tank installed is too small, the pump starts and stops too often.

The stop function is default activated in constant pressure applications. If not desired, it can be deactivated in parameter 200-19 "Stop function".

Constant differential pressure, pump

The differential pressure of the pump is kept constant, independently of the flow rate. See fig. 94.

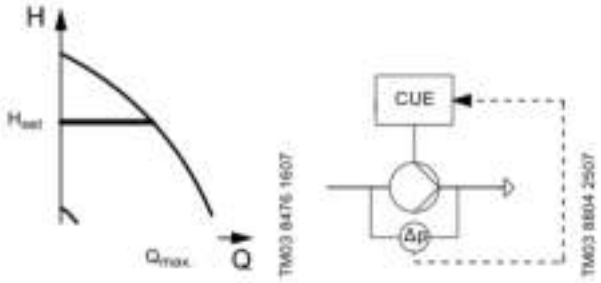

Fig. 94 Constant differential pressure, pump

The pump is controlled according to a constant differential pressure measured across the pump. This means that the pump system offers constant differential pressure in the Q-range of 0 to $Q_{max.}$, represented by the horizontal line in the QH diagram.

Constant differential pressure, system

The differential pressure of the system is kept constant, independently of the flow rate. See fig. 95.

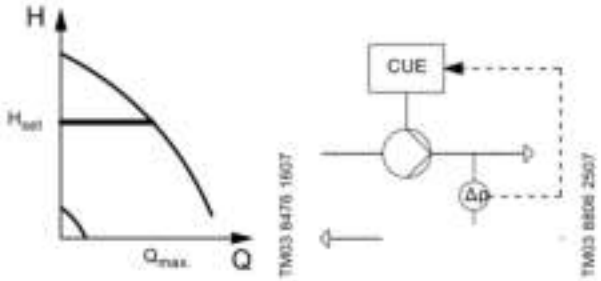

Fig. 95 Constant differential pressure, system

The pump is controlled according to a constant differential pressure measured across the system. This means that the pump offers constant differential pressure of the system in the Q-range of 0 to $Q_{max.}$, represented by the horizontal line in the QH diagram.

Differential pressure from two sensors

The purpose of this function is to make differential pressure control possible by using measurements from two separate pressure sensors. It can be used in these control modes:

- proportional differential pressure
- constant differential pressure.

The function requires an MCB 114 sensor input module.

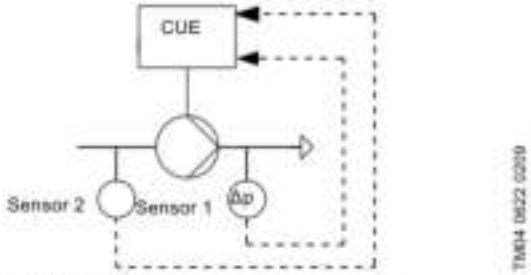

Fig. 96 Differential pressure from two sensors

Sensor 1 is connected to sensor input 1.

Sensor 2 is connected to sensor input 2 of an MCB 114 sensor input module.

Proportional differential pressure

The differential pressure of the pump is reduced at falling flow rate and increased at rising flow rate. See fig. 97.

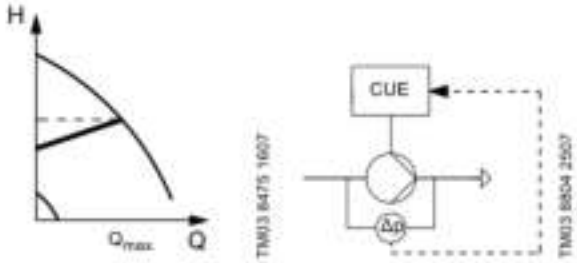

Fig. 97 Proportional differential pressure

The pump is controlled according to a differential pressure measured across the pump. This means that the pump system offers a proportional differential pressure in the Q-range of 0 to $Q_{max.}$, represented by the sloping line in the QH diagram.

The proportional differential pressure can be selected with one of these flow dependencies:

- linear, default
- quadratic.

When the flow dependency is selected as parabolic, the differential pressure of the pump is reduced with a parabolic curve at falling flow rate and increased at rising flow rate.

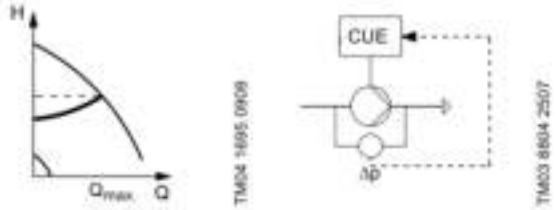

Fig. 98 Proportional differential pressure, parabolic curve

The pump is controlled according to a differential pressure measured across the pump. This means that the pump system offers a flow-compensated differential pressure in the Q-range of 0 to $Q_{max.}$ represented by the parabolic curve in the QH diagram.

H_{max} update

This function can be used in connection with the control mode proportional differential pressure. The purpose is to find the "true" value of the maximum head at no flow and nominal pump speed.

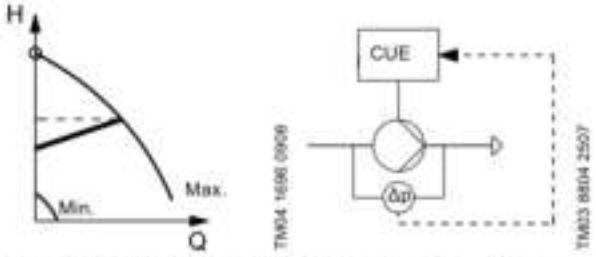

Fig. 99 Proportional differential pressure, $H_{max.}$ update

The function consists of two steps:

1. Ramping up the speed to nominal speed.
2. Measuring $H_{max.}$ for 20 seconds at nominal speed.

Valves must be closed so that the pump is operating without flow.

Constant flow rate

The flow rate is kept constant, independently of the head. See fig. 100.

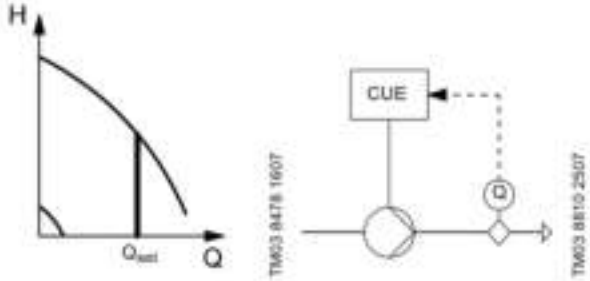

Fig. 100 Constant flow rate

The pump is controlled according to a constant flow rate, represented by the vertical line in the QH diagram.

Constant level

The liquid level is kept constant, independently of the flow rate. See fig. 101.

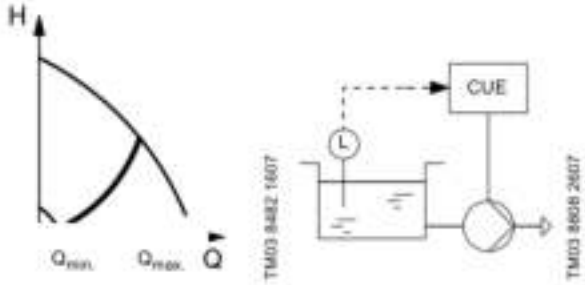

Fig. 101 Constant level

The pump is controlled according to a constant liquid level. This means that the pump offers a constant level in the Q-range of $Q_{min.}$ to $Q_{max.}$, represented by the parabolic line in the QH diagram.

The function is an emptying function by default.

Constant level with stop function

The liquid level is kept constant at high flow rate. On/off operation is at low flow rate. See fig. 102.

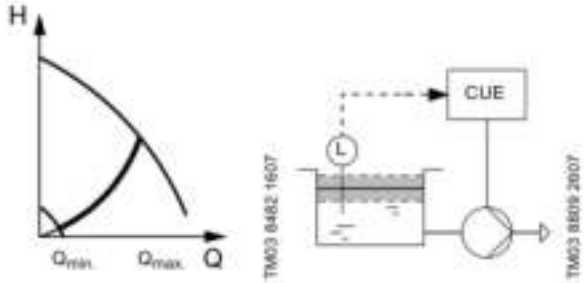

Fig. 102 Constant level with stop function

The pump is controlled according to a constant liquid level. This means that the pump offers a constant level in the Q-range of $Q_{min.}$ to $Q_{max.}$, represented by the parabolic line in the QH diagram.

The function is an emptying function by default.

The purpose of the stop function is to stop the pump when low or no flow is detected. When low flow is detected, the pump is in on/off operation. If there is flow, the pump continues to operate according to the setpoint.

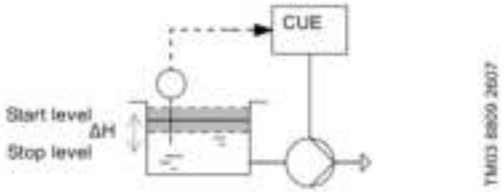

Fig. 103 Constant level with stop function. Difference between start and stop levels (ΔH)

Low flow can be detected in two different ways:

- with the built-in low-flow detection function
- with a flow switch connected to a digital input.

The low-flow detection function checks the flow regularly by measurement of speed and power.

When a flow switch detects low flow, the digital input is activated.

It is only possible to set constant level with stop function if the system incorporates a level sensor, and all valves can be closed.

The stop function is default activated in constant pressure applications. If not desired, it can be deactivated in parameter 200-19 "Stop function".

Constant temperature

The liquid temperature is kept constant, independently of the flow rate. See fig. 104.

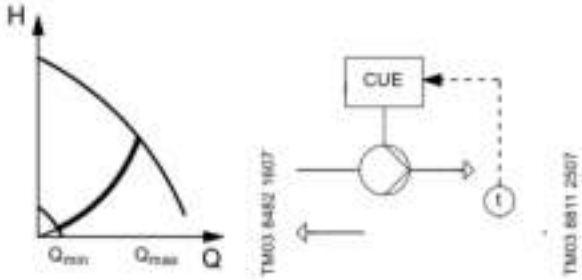

Fig. 104 Constant temperature

The pump is controlled according to a constant temperature. This means that the pump offers a variable flow rate in the Q-range of $Q_{min.}$ to $Q_{max.}$, represented by the parabolic line in the QH diagram.

Constant other value

Any other value is kept constant. See the CUE installation and operation instructions for further information.

Setpoints

The setpoint is normally set in the startup guide and changed via the [Favourites] menu on the CUE operating panel. If needed, the setpoint can be influenced via the external setpoint input.

CUE offers these setpoint possibilities:

- External setpoint
- Predefined setpoints
- GENIbus setpoint.

The setpoint range depends on the selected control mode:

- In "Open loop" control mode, the setpoint is set in percentage corresponding to the required speed. The setting range is between the minimum and maximum curves in percentage of nominal frequency.
- In "Proportional differential pressure" control mode, the setting range is equal to 25 % to 90 % of the maximum head.
- In all the other control modes, the setting range is equal to the sensor measuring range.

External setpoint influence

The setpoint can be influenced by connecting an analog signal to the external setpoint input and is activated in the startup guide.

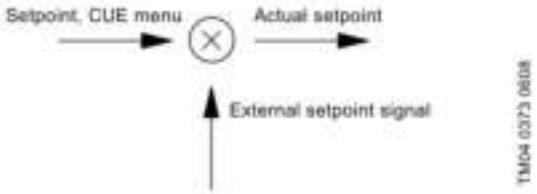

Fig. 105 Setpoint, CUE menu and external setpoint signal

The signal can influence the actual setpoint by these possibilities of the function:

- External setpoint, default
- Inverse external setpoint
- External setpoint with stop
- External setpoint based on a reference table.

The external setpoint signal is used for calculating the actual setpoint. The minimum signal is the minimum setpoint, and the maximum signal is the normal setpoint set via the CUE [Favourites] menu "202-0x".

External setpoint, default

The actual setpoint is a linear function of the external setpoint signal. See fig. 106.

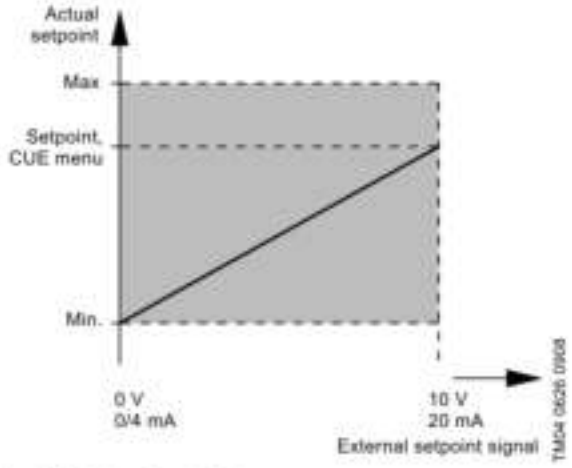

Fig. 106 External setpoint

The minimum and maximum values of the external setpoint signal are default within the full-scale from 0-10 V (0/4-20 mA), but can be set in the [Main] menu group 200-1x "Setpoint Handling". See fig. 107.

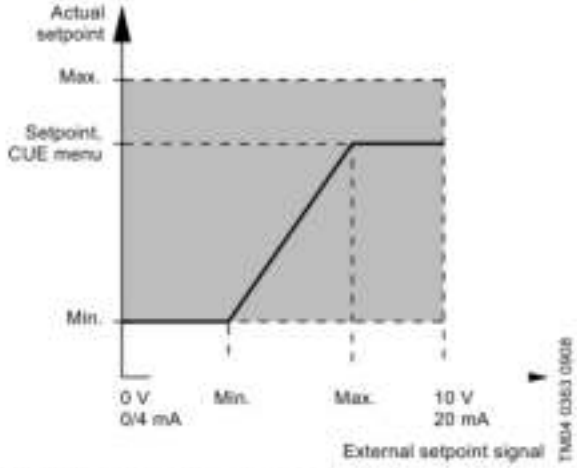

Fig. 107 Reduced external setpoint signal

Inverse external setpoint

The actual setpoint is an inverse linear function of the external setpoint signal and is activated in [Main] menu parameter 200-10 "External setpoint". See fig. 108.

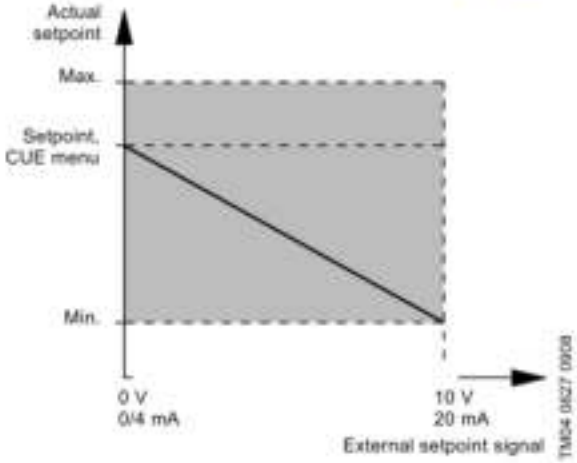

Fig. 108 Inverse external setpoint signal

The maximum and minimum values of the external setpoint signal are default within the full-scale from 0-10 V (0/4-20 mA), but can be set in the [Main] menu group 200-1x "Setpoint Handling". See fig. 109.

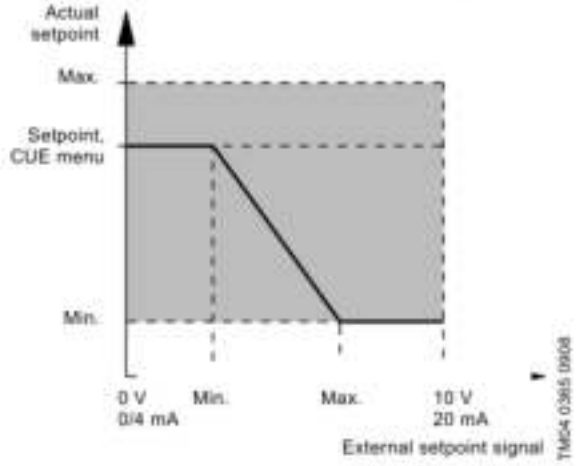

Fig. 109 Reduced inverse external setpoint signal

External setpoint with stop function

The actual setpoint with stop is a linear function of the external setpoint signal above 20 % signal and on/off operation below 20 % signal. Linear with stop is selected in [Main] menu parameter 200-10 "External setpoint". See fig. 110.

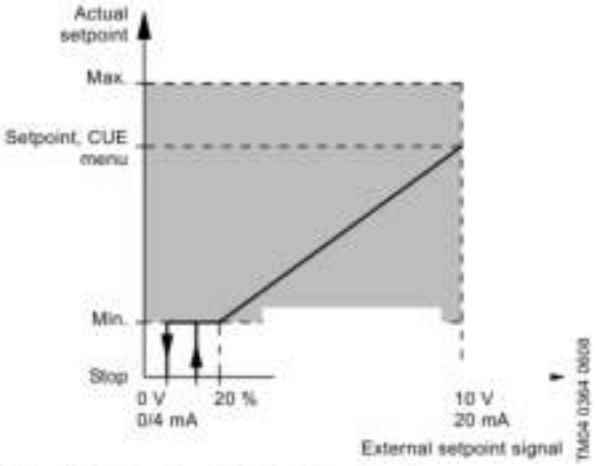

Fig. 110 External setpoint with stop function

When the external setpoint signal is below 10 %, the operating mode is "Stop".

When the external setpoint signal is above 15 %, the operating mode is "Normal".

External setpoint based on a reference table

The actual setpoint is a piecewise linear function of the external setpoint signal and is activated in [Main] menu parameter 200-10 "External setpoint". See fig. 111.

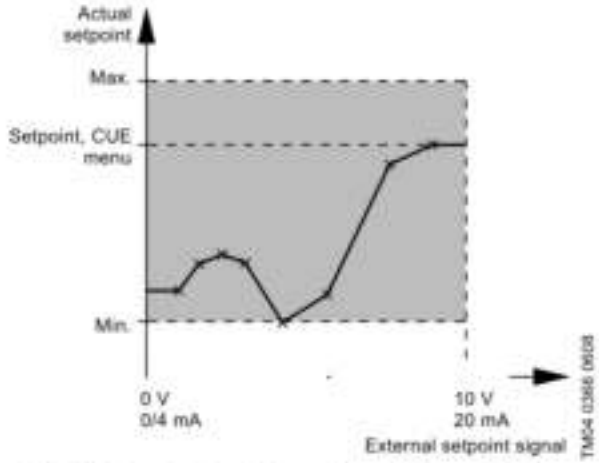

Fig. 111 External setpoint based on a reference table

The linear function is defined as an interpolation between the points in a table. The table has up to eight points that are adjustable in the [Main] menu group 200-1x "Setpoint Handling".

Predefined setpoints

This function makes it possible to select up to seven predefined setpoints using one to three digital inputs.

The setpoints are selected as a binary coding of the digital inputs as shown in the table below. The predefined setpoints are adjustable in [Dl 2] menu parameter 310 "Preset Reference".

Predefined setpoint	DI 2	DI 3	DI 4
15 %	-		
30 %		-	
45 %	-	-	
60 %			x
75 %	-		-
90 %		-	-
100 %	x	x	x

x = Closed contact

If none of the digital inputs are activated, the operating mode can be configured to "Stop" or to being controlled according to a setpoint set via the [Main] menu parameter 200-18 "Predefined Setpoint Zero Function".

If "Min.", "Max." or "Stop" is selected via the operating panel, the predefined setpoints are overruled.

Predefined setpoints cannot be influenced by the external setpoint input.

GENIbus setpoint

If CUE is remote-controlled via the GENIbus input, the setpoint is set via the bus.

The GENIbus setpoint cannot be influenced by the external setpoint signal.

PID controller

CUE has a built-in PID controller for speed control of pumps. The factory setting of gain (K_p) and integral time (T_i) are automatically adjusted to suggested settings based on the chosen control mode. The values can easily be changed in the operating panel.

The controller can operate in both normal and inverse mode and is selected in parameter 20-81 "PID Normal/ Inverse Control".

Normal mode

Normal mode is used in systems in which an increase in pump performance results in a rise in the value measured at the feedback sensor. This will typically be the case in most CUE applications.

Inverse mode

Inverse mode is used in systems in which an increase in pump performance will result in a drop in the value measured at the feedback sensor. This mode will typically be used for constant level operation (emptying tank) and for constant temperature operation in cooling systems.

Negative K_p value corresponds to inverse mode.

Description

The PID controller compares the required setpoint (p_{set}) with the actual value (p) measured by the transmitter (P). See fig. 112.

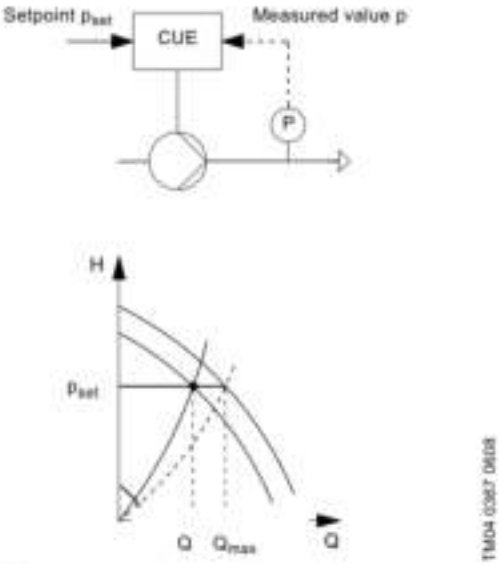

Fig. 112 Constant pressure control

If the measured value is higher than the required setpoint, the PID controller will reduce the speed and the performance of the pump until the measured value is equal to the required setpoint.

Suggested controller settings

System/application	K_p Heating system[1]	K_p Cooling system[2]	T_i
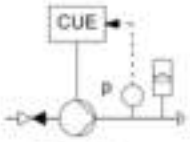	0.2		0.5
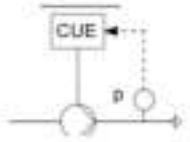	0.2		0.5
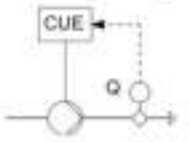	0.2		0.5
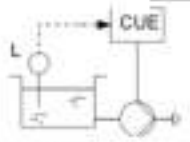	-2.5		100
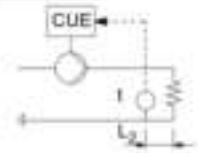	0.5	-0.5	$10 + 5L_2$
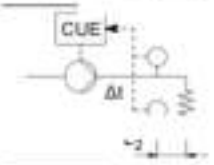	0.5		$10 + 5L_2$
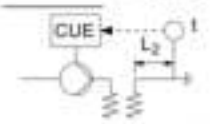	0.5	-0.5	$30 + 5L_2$*
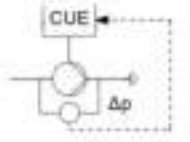	0.5		0.5*
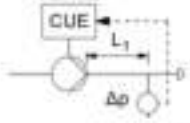	0.5		L_1 < 5 m (16 ft): 0.5* L_1 > 5 m (16 ft): 3* L_1 > 10 m (32 ft): 5*

* T_i = 100 seconds (default).

1) Heating systems are systems in which an increase in pump performance will result in a rise in temperature at the sensor.

2) Cooling systems are systems in which an increase in pump performance will result in a drop in temperature at the sensor.

L_1 = Distance in [m (ft)] between the pump and the sensor.

L_2 = Distance in [m (ft)] between the heat exchanger and the sensor.

The setting of gain (K_p) and integral time (Ti) can be manually changed in the operating panel via the [Main] menu group 20-9x "PID Controller".

Duty/standby, duty/assist and cascade

Use the startup guide for setting the multipump system with the following options:

- No (used for CUE controlling single pumps)
- Variable and fixed speed
- Variable speed only.

Advanced adjustments can be set in the [Main] menu group 25-xx "Cascade controller".

Duty/standby

The built-in duty/standby function applies to "Variable speed only" pumps connected in parallel to ensure reliability of supply. See fig. 113.

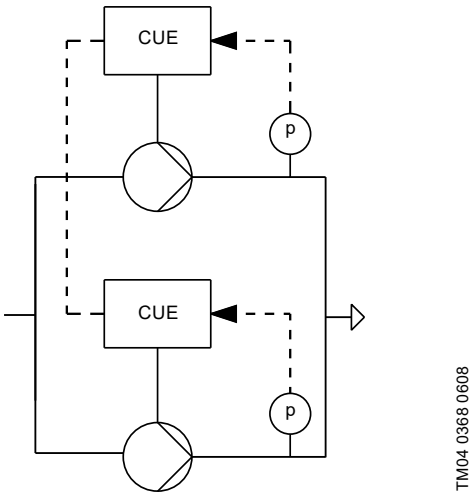

Fig. 113 Two pumps connected in parallel and controlled via Modbus RTU

The duty/standby function is set by choosing "Variable speed only" in the startup guide, then followed by setting the desired function to "Alternation" or "Back-up".

These are the primary purposes of the function:

- To let one pump run at a time.
- To start the standby pump if the duty pump stops due to an alarm.
- To alternate the pumps at least every 24 hours, only if alternation function is selected.

The two pumps are electrically connected by means of the Modbus RTU protocol on the GENIbus port.

The two pumps running duty/standby in this way cannot use the GENIbus interface for remote communication. The two pumps use their own local operating mode. See section *Operating modes* on page 103.

Both pumps must have the same control mode. See section *Control modes* on page 103.

Duty/assist and variable speed cascade

The duty/assist and variable speed cascade functions are used to cascade additional variable speed pumps. Each pump is connected to a CUE unit. See fig. 113.

Setting the duty pump:

The duty/assist function is set by selecting "Variable speed only" in the startup guide, then followed by setting the desired function to "Cascade".

If there are more than two pumps in the system, the duty CUE must be fitted with an MCO 101 option. The variable speed cascade function is then set by choosing "Variable speed only" in the startup guide, then followed by setting the total number of pumps in the system.

Setting the assist pump(s):

Use the startup guide to set the control mode to open loop, then confirm that the pump is an assist pump in a variable speed cascade system.

These are the primary purposes of the duty/assist function:

- To let the duty pump run all the time (except if low flow stop is activated).
- To start the assist pumps if the duty pumps cannot maintain the pressure.
- To start the assist pumps if the duty pump stops due to an alarm.

The cascade control ensures that the performance of the pumps is automatically adapted to consumption by switching on or off pumps and by changing the speed of the pumps in operation. This makes the system run as energy-efficiently as possible with a limited number of pumps.

When more than one pump is running in steady state, the pumps run at the same speed and are controlled by the PI controller of the master pump. As standard, the pump with the lowest number is the duty pump.

The pumps running duty/assist in this way cannot use the GENIbus interface for remote communication.

Fixed speed cascade

The fixed speed cascade function is used to cascade additional fixed speed pumps. Only one duty pump is connected to a CUE unit. See fig 114.

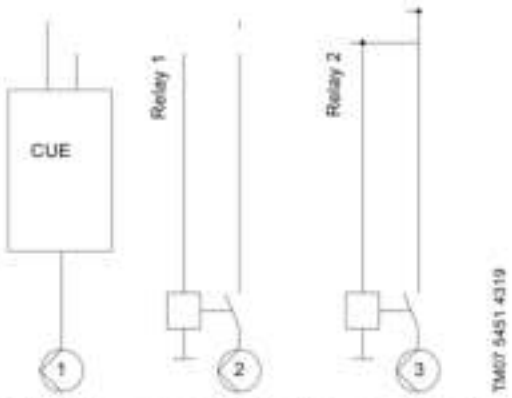

Fig. 114 One duty pump connected with two fixed speed pumps controlled via relays

The fixed speed cascade function is set by selecting "Variable and Fixed speed" in the startup guide, then followed by setting the total number of pumps in the system. When "Variable and Fixed speed" is selected, this pump runs as a duty pump in the fixed speed cascade system. The following steps must be performed:

- For a two-pump setup: Relay 1 is automatically set to activate or deactivate one fixed speed pump based on pressure demand.
- For a three-pump setup: Relay 1 and Relay 2 are automatically set to activate or deactivate one additional fixed speed pump at the same time based on pressure demand.

These are the primary purposes of the function:

- To let the duty pump run all the time (except if low flow stop is activated).
- To start the fixed speed pumps if the system pressure decreases below 90 % of the setpoint.
- To stop the fixed speed pumps if the system pressure increases above 110 % of setpoint.

The cascade control ensures that the performance of the pumps is automatically adapted to consumption by switching on or off pumps and by changing the speed of the duty pump in operation.

Dry running

This function protects the pump against dry running. When lack of inlet pressure or water shortage is detected, the pump is stopped before being damaged.

Lack of inlet pressure or water shortage can be detected in three ways:

- With a switch connected to a digital input configured to dry-running protection.
- CUE checks if the shaft power is below a dry-pump limit for a configurable time.
- CUE checks if the pressure cannot be reached at full speed for a configurable time.

Note that the dry-running function requires a sensor. This means that the function will not work in open loop. These conditions must be present to activate the dry-running alarm: The power consumption must be below a certain level (set by the parameters), and the pump must run at full speed (handled by the control mode and the sensor). CUE increases the speed to maximum if no water is present. Without a sensor, it will not work!

Setting the dry run protection based on a switch connected to a digital input

The use of a digital input requires an accessory, such as these:

- a Grundfos LiqTec® dry-running switch
- a pressure switch installed on the suction side of the pump
- a float switch installed on the suction side of the pump.

See section *28. Accessories* for more information on the required sensors. The pump cannot restart if the input is activated. Restart may be delayed by up to 30 minutes, depending on the pump family.

The digital inputs of CUE (terminals, 18, 19, 27, 29, 32, 33) can be set individually to different functions in [Main] menu parameter group 5-1x "Digital Inputs".

Select dry running to activate the detection based on a switch.

Setting the dry run protection based on a shaft power

The use of shaft power requires an actual power reading at two frequencies.

Procedure without pump curve: After completing the startup guide follow the steps:

1. Close the valve. No flow is required during the test.
2. Press Hand on and set the speed to 50 % (30 Hz or equivalent RPM). CUE starts the pump.
3. Go to [Main] menu parameter 16-10 "Power [kW]" and read the input power. Make a note of the low limit value.
4. Press [Home] to return to the status screen.
5. Press Hand on and set the speed to 90 % (54 Hz or equivalent RPM). CUE starts the pump.
6. Go to [Main] menu parameter 16-10 "Power [kW]" and read the input power. Make a note of the high limit value.
7. Stop CUE and open the valve.

Procedure with pump curve:

Go to Grundfos Product Center and enter the part number for your pump:

1. Enter "Show advanced options".
2. Go to "Hydraulic layout" and set variable speed to "Yes".
3. Click on the pump curve to set the duty point as close to f_{min} and enter Q to 0.1 as Operating point. See fig. 115
4. Read out power (P2) and speed (n) as low limit values. See fig. 116.
5. Click on the pump curve to set the duty point as close to 90 % speed and enter Q to 0.1 as Operating point. See fig. 115.
6. Read out power (P2) and speed (n) as high limit values. See fig. 116.

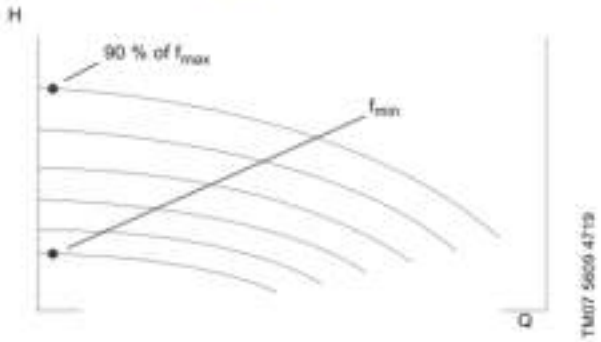

Fig. 115 QH curve for variable speed pump for choosing low flow operating points

Fig. 116 QP curve for variable speed pump for reading P2 at low flow

The data must be entered in [Main] menu parameter group 22-3x "No-flow Power Tuning" as follows:

- 22-32 "Low Speed [RPM]" or 22-33 "Low Speed [Hz]" = 30 Hz
- 22-34 "Low Speed Power [kW]" = the power readout at Low limit in previous procedure
- 22-36 "High Speed [RPM]" or 22-37 "High Speed [Hz]" = 54 Hz
- 22-38 "High Speed Power [kW]" = the power readout at High limit in previous procedure.

Activate the desired protection function, for example an alarm, in [Main] menu parameter 22-26 "Dry Pump Function".

The dry-running stop function has now been set correctly. The time setting is 10 seconds from no-flow delay (22-24) + 10 seconds from dry-running detection delay (22-27) = 20 seconds.

Setting the dry run protection based on an end of curve

CUE will by default issue an alarm at end of curve. This will also occur under the dry run conditions of water shortage and no flow.

In constant pressure control mode, the end of curve is detected if the pressure is below a 20 % tolerance of the sensor range of the setpoint and the pump is running at maximum speed for a 10-second delay. The pump cannot build up the setpoint pressure due to water shortage.

The end of curve tolerance, delay and protection function can be adjusted in [Main] menu parameter group 22-5x "End of Curve".

Example: A constant pressure system with 0-16 bar sensor and setpoint at 11.75 bar (120 m head) gives an end of curve alarm if the pressure is below (11.75 bar - 20 % x 16 bar) = 8.55 bar and the pump is running at maximum speed.

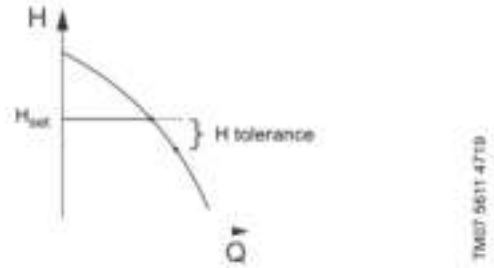

Fig. 117???

Dry-running detection based on end of curve also gives an alarm, if there is actual water and the system head curve shifts to high flow range; this means that the function may need to be adjusted to work properly in the high flow area.

Start adjustments

Start delay

The start delay after power-on is a delay between power being applied and the pump starting.

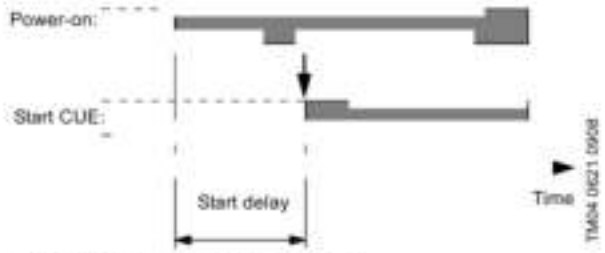

Fig. 118 Start delay after power-on

The purpose is to allow the remote-control equipment to start up before the pump.

The start delay is deactivated if a remote command is received via GENIbus.

This can be set in [Main] menu parameter 1-71 "Start Delay".

Flying start

This function makes it possible to catch a motor that is spinning freely due to a mains drop-out. This prevents a high current draw from CUE by starting on a rotating motor.

When flying start is enabled, the start delay function is not active.

This can be set in [Main] menu parameter 1-73 "Flying Start".

Pipe fill

This function is used for filling empty pipes with water in a controlled manner. If the function is not activated, pipes will be filled at maximum speed. In pressure-controlled systems where pipes are empty at startup, high speed will cause water hammer until the speed has been reduced to fit the actual demand.

Water hammer can be prevented by introducing a pipe fill sequence before the system is running normal operation. The pipe fill function can limit the speed of the pump when filling pipes, and thus reduce water hammer in filled pipes. A time limit or a pressure can be set to deactivate the pipe fill function and turn CUE into normal operation.

As the pressure in horizontal pipe systems does not climb as the system fills, filling horizontal pipe systems requires a user-specified speed and time to fill the pipes or until a user-specified pressure setpoint is reached.

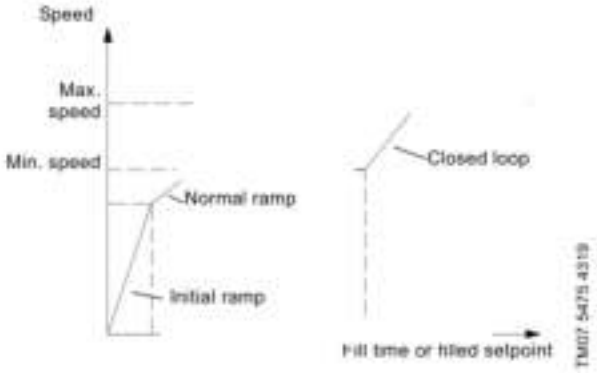

Fig. 119 Horizontal pipe system

In a vertical pipe system it's recommended to use the PID function to ramp the pressure at a user-specified rate between the motor speed low limit and a user-specified pressure.

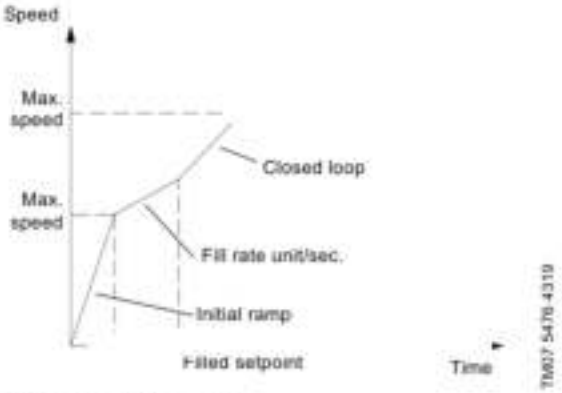

Fig. 120 Vertical pipe system

Activation or deactivation is done in parameter 29-00 "Pipe Fill Enable".

Operation

Ramps

The CUE startup guide incorporates adjustment of two types of ramp:

- ramp-up and ramp-down
- initial and final ramps.

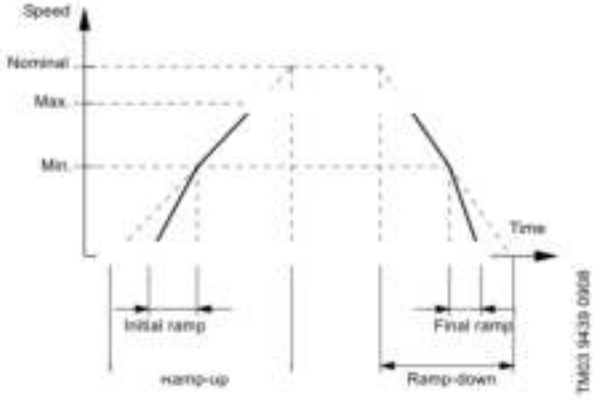

Fig. 121 Ramp-up and ramp-down of CUE

The ramp-up and ramp-down are used for protection against overload when starting and stopping CUE, and the time is defined as acceleration time from 0 min^{-1} to nominal motor speed and the deceleration time from nominal motor speed to 0 min^{-1}, respectively. The settings are manually set in parameter 3-41 "Ramp 1 Ramp Up Time" and 3-42 "Ramp 1 Ramp Down Time" of the operating panel.

The initial and final ramps prevent operation for a longer time than necessary at speeds below minimum speed. The setting is done automatically based on the pump family selected in the startup guide.

Operating range

How to set the operating range:

- Set the minimum speed within the range from a pump-dependent minimum speed to the adjusted maximum speed. The factory setting depends on the pump family.
- Set the maximum speed within the range from the adjusted minimum speed to the pump-dependent maximum speed. The factory setting is equal to 100 %, meaning the speed stated on the pump nameplate.

The area between the minimum and maximum speed is the actual operating range of the pump.

The operating range can be changed by the user within the pump-dependent speed range.

For some pump families, oversynchronous operation (maximum speed above 100 %) will be possible. This requires an oversize motor to deliver the shaft power required by the pump during oversynchronous operation.

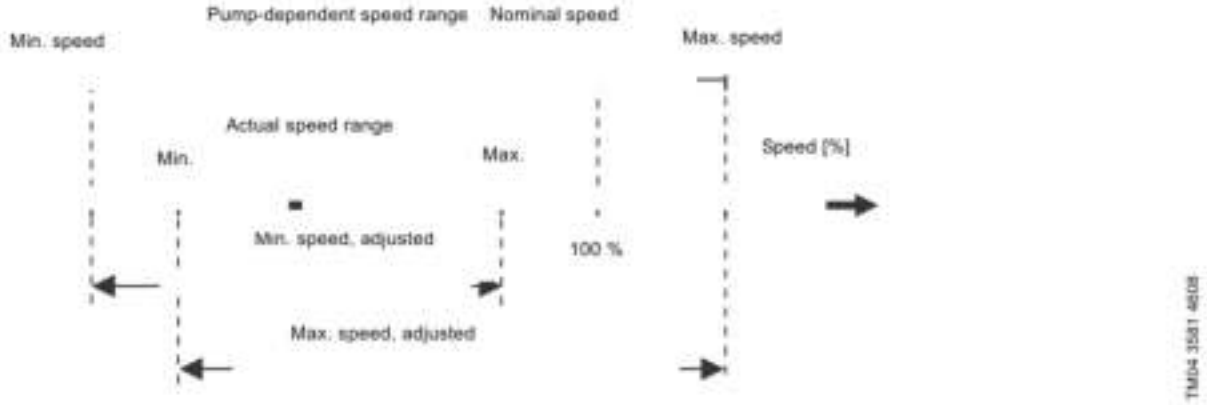

Fig. 122 Setting of the minimum and maximum curves in percentage of maximum performance

Minimum and maximum speed can manually be overwritten in parameter 4-11 "Motor Speed Low Limit" and 4-13 "Motor Speed High Limit", respectively. Note that the maximum speed cannot exceed the maximum output frequency set in parameter 4-19.

Running outside the pump-dependent minimum and maximum speeds may damage the pumps.

Skip bands

Some systems require that certain output frequencies or speeds are avoided due to resonance problems in the system. A maximum of four frequency or speed ranges can be avoided.

Use the semi-automatic bypass speed setup to facilitate the programming of the frequencies to be skipped due to resonances in the system.

Carry out following process:

1. Stop the motor.
2. Select Enabled in parameter 4-64 "Semi-Auto Bypass Set-up".
3. Press [Hand On] to start the search for frequency bands causing resonances. The motor ramps up according to the ramp set.
4. When sweeping through a resonance band, press [OK] on the operating panel when leaving the band. The actual frequency is stored as the first element in parameter 4-62 "Bypass Speed To [RPM]" or parameter 4-63 "Bypass Speed To [Hz]" (array). Repeat this for each resonance bands identified at the ramp-up. Maximum four can be adjusted.
5. When maximum speed has been reached, the motor automatically begins to ramp down. Repeat the above procedure when speed is leaving the resonance bands during the deceleration. The actual frequencies registered when pressing [OK] are stored in parameter 4-60 "Bypass Speed From [RPM]" or parameter 4-61 "Bypass Speed From [Hz]".
6. When the motor has ramped down to stop, press [OK]. Parameter 4-64 "Semi-Auto Bypass Set-up" automatically resets to Off. The frequency converter stays in Hand mode until [Off] or [Auto On] is pressed.

Press [Cancel] to abort, if the frequencies for a certain resonance band are not registered in the right order. For example if frequency values stored in parameter 4-62 "Bypass Speed To [RPM]" are higher than those in parameter 4-60 "Bypass Speed From [RPM]", or if they do not have the same numbers of registrations for the "Bypass From" and "Bypass To", all registrations are cancelled and the following message is shown: "Collected speed areas overlapping or not completely determined".

Stop adjustments

Standstill heating preheats the motor during standstill to avoid condensation within the motor.

When the pump is stopped by a stop command, a current will be applied to the motor windings in order to keep the temperature within the motor above the dewpoint temperature. No external heater is needed.

The preheating of the motor is especially important when the motor is installed under these conditions:

- high humidity
- outdoor installation.

The consequences of condensed moisture within the motor are for example corrosion damage to electrical contacts and the bearings of the motor shaft.

This can be activated in parameter 1-80 "Function at Stop".

Check valve ramps

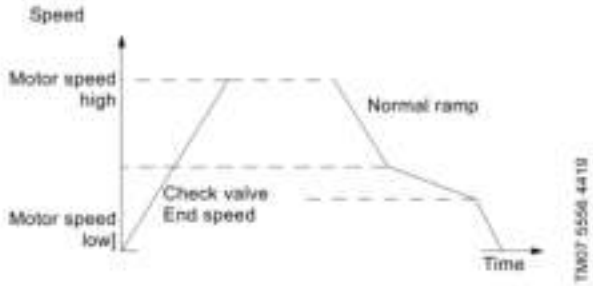

Fig. 123 Check valve ramp

To protect ball check valves in a stop situation, the check valve ramp time can be utilized as a temporary slower ramp rate. When parameter 3-85 "Check Valve Ramp Time" is different from 0 s, the check valve ramp time is effectuated between motor speed low and check valve end speed.

Set the check valve end speed where the check valve is expected to be closed and the check valve is no longer active.

Over-voltage control (OVC)

When deceleration is too fast in case of higher inertia, the braking energy can cause an over voltage in CUE. This can be overcome by enabling over-voltage control in [Main] menu parameter 2-17, and CUE automatically prolongs the deceleration times; normal ramps, final ramps, and check valve ramps to stop CUE without an alarm.

Pump motor protection

Motor temperature

The motor thermal protection can be activated in [Main] menu parameter 1-90 "Motor Thermal Protection" and can be implemented using a range of techniques:

- By a PTC sensor in the motor windings connected to one of the analog or digital inputs, parameter 1-93 "Thermistor Source".
- By calculation (ETR = Electronic Thermal Relay) of the thermal load based on the actual load and time. The calculated thermal load is compared with the rated motor current and the rated motor speed. If parameter 1-91 "Motor External Fan" is set to Yes, the motor must have forced cooling and the ETR does not take motor speed into consideration.
- By a mechanical thermal switch (Klixon type). Parameter 1-93 "Thermistor Source".

For the North American market: the ETR functions provide class 20 motor overload protection in accordance with NEC.

Motor bearing monitoring

This function is used to give an indication when it is time to relubricate or replace the motor bearings.

It shows these information:

- When to relubricate the motor bearings.
- When to replace the motor bearings.

The function is based on the running hours of the pump, and shows a notification on the display to lubricate the bearings after 5000 running hours and replace the bearings after 20000 running hours.

Monitoring of motor bearing temperature using an MCB 114 sensor input module and Pt100/Pt1000 sensors measuring the bearing temperature can also be used to issue a warning. An alarm is generated if the bearing temperature gets too high. Warnings and alarms are generated and reset by using hysteresis.

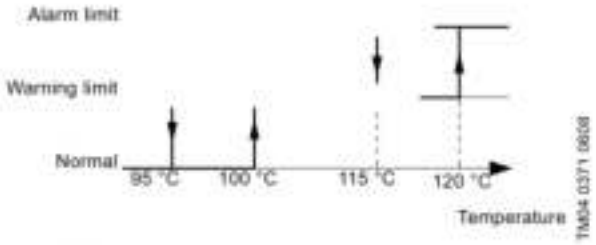

Fig. 124 Monitoring of bearing temperature with warning and alarm limits

Limit exceed

CUE has two independent limit exceed functions.

These are monitoring functions offering information, warning, alarm, or change of operating mode when a low or high limit is exceeded. See fig. 125.

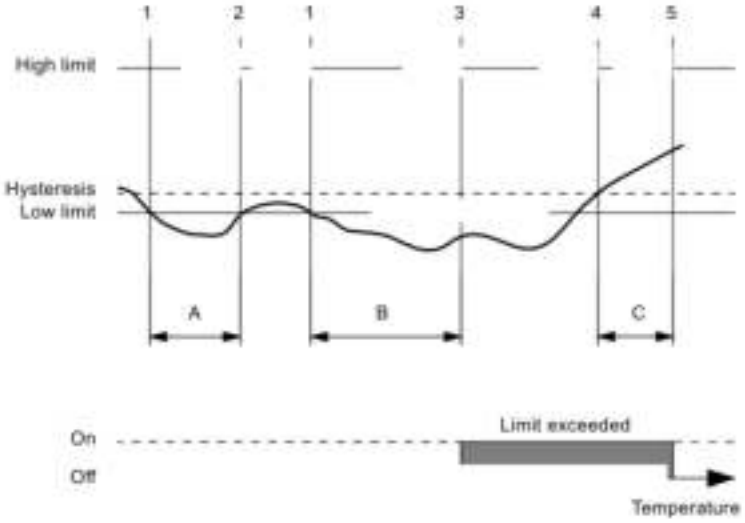

Fig. 125 Example of low limit exceeded

The two limit exceed functions are set in [Main] menu parameter group 201-0x "Limit Exceed". Parameters are grouped so that Limit Exceed 1 are set in index 0 and Limit Exceed 2 are set in index 1.

The default setting of this function is "Not active" and is activated in parameter 201-00 by setting to Enabled or Enabled with event action.

The function has two timers: a detection delay timer and a reset delay timer, that are adjustable in parameters 201-06 and 201-07, respectively.

The limits can either be a high or a low limit adjusted in parameter 201-01, and the actual limit value must be entered in parameter 201-04.

The detection delay timer starts when a limit is exceeded (1). See fig. 125.

- A: If the limit is no longer exceeded (2) when the detection time expires, the timer is reset.
- B: If the limit is still exceeded (3) when the detection time expires, the output of the detector will change to "Limit exceeded". The reset delay timer starts when the detector output is "Limit exceeded" and the limit is no longer exceeded, using hysteresis (4).
- C: When the delay time has expired (5), the detector output changes to "Limit not exceeded".

Input possibilities

It is possible to have two limit exceeded functions in parallel with these inputs set in parameter 201-02:

- all analog inputs
- all Pt100/Pt1000 inputs (this requires an MCB 114 sensor input module)
- internal measured values; Power consumption (P2), Motor speed, or Motor current.

Output possibilities

There are these output possibilities:

- signal relay 1 and 2 activated in parameters 5-40[0] and 5-40[1], respectively
- digital output activated in parameters 5-30 and 5-31 respectively
- analog output activated in parameter 6-50.

Event actions

Change of operating mode as event action is set in parameter 201-03.

- Warning only
- Stop
- Maximum speed
- Minimum speed
- User curve speed.

The default setting of this function is "Not active".

Digital and Analog I/O

CUE digital inputs can be configured to either PNP or NPN mode in [Main] menu parameter 5-00 "Digital I/O Mode":

- NPN - Active at 0 V
- PNP - Active at 24 V.

CUE has six terminals for digital input and output functions:

Terminal no.	Name	Parameter	Default	I/O mode
18	DI 1	5-10	Start	
19	DI 2	5-11		-
27	DI/O 1	5-12 for input or 5-30 for output	No operation	5-01
29	DI/O 2	5-13 for input or 5-31 for output		5-02
32	DI 3	5-14		-
33	DI 4	5-15		

Digital input functions

- Reset: Used to reset an alarm manually from external signal.
- Coast: Used to immediately stop the pump without ramping down. Pump will stop free-wheeling.
- Start: Used to start the pump manually in [Auto on] mode.
- Reversing: Used to reverse the motor speed. Do not use this function on a pump.
- Jog: Used to set the motor speed fixed to Jog Speed [Hz] of parameter 3-11.
- Preset ref bit 0 through 2: Used to set the pump setpoint fixed to values of parameter 3-10.
- Freeze output: Used to continue pump speed at current speed.
- Hand/Auto start: Selects hand or auto start. High signal selects auto on only. Low signal selects hand on only.
- Hand start: A signal applied to put CUE into hand-on mode as if [Hand On] has been pressed and a normal stop command is overridden.
- Auto start: A signal applied to put CUE into auto-on mode as if [Auto On] has been pressed and a normal stop command is overridden.

Note that if disconnecting the signal, the motor stops. To make any other start commands valid, assign another digital input to [54] Auto Start and apply a signal to this. [Hand On] and [Auto On] have no impact. [Off] overrides local start and auto start. Press either [Hand On] or [Auto On] to make local start and auto start active again. If there is no signal on neither [53] Hand start nor [54] Auto start, the motor stops regardless of any normal start command applied. If a signal is applied to both [53] Hand start and [54] Auto start, the function is auto start. If pressing [Off], the motor stops regardless of signals on [53] Hand start and [54] Auto start.

- Min.: Changes the operating mode to Min. See section *Operating modes* on page 103.
- Max.: Changes the operating mode to Max. See section *Operating modes* on page 103.
- User curve: Changes the operating mode to User curve. See section *Operating modes* on page 103.

Note that most functions are available with and without inverse. Choose with inverse if you want a specific function to be activated opposite than the PNP or NPN mode.

Digital and Relay output functions

- Control ready: The control board receives supply voltage.
- Drive ready: CUE is ready for operation and applies a supply signal on the control board.
- Drive ready/remote control: CUE is ready for operation and is in auto-on mode.
- Standby/no warning: CUE is ready for operation. No start or stop command has been given (start/disable). There are no warnings.
- Running: The pump is running.
- Running/no warning: The pump is running and there are no warnings.
- Run on reference/no warning: The motor runs at reference speed.
- Alarm: An alarm activates the output.
- Alarm or warning: An alarm or a warning activates the output.
- At torque limit: The torque limit set in parameter 4-16 "Torque Limit Motor Mode" has been exceeded.
- Torque limit and stop: Used in performing a coast stop and in torque limit condition. If the frequency converter has received a stop signal and is at the torque limit, the signal is logic 0.
- Out of current range: The motor current is outside the range set in parameter 4-18 "Current Limit".
- Below current, low: Motor current is lower than the setting in parameter 4-50 "Warning Current Low".
- Above current, high: Motor current is higher than the setting in parameter 4-51 "Warning Current High".
- Out of speed range: Output speed is outside the ranges set in parameter 4-52 "Warning Speed Low" and parameter 4-53 "Warning Speed High".
- Below speed, low: Output speed is lower than the setting in parameter 4-52 "Warning Speed Low".
- Above speed, high: Output speed is higher than the setting in parameter 4-53 "Warning Speed High".
- Out of feedback range: Feedback is outside the ranges set in parameter 4-56 "Warning Feedback Low" and parameter 4-57 "Warning Feedback High".
- Below feedback low: Feedback is below the limit set in parameter 4-52 "Warning Speed Low".
- Above feedback high: Feedback is above the limit set in parameter 4-56 "Warning Feedback Low".
- Thermal warning: The thermal warning turns on when the temperature exceeds the limit in the motor, the CUE, or the thermistor.
- Bus OK: Active communication (no timeout) via the serial communication port.
- Out of ref range: Reference is outside the ranges set in parameter 4-54 "Warning Reference Low" and parameter 4-55 "Warning Reference High".
- Below reference low: The reference is below the limit set in parameter 4-54 "Warning Reference Low".
- Above reference high: The reference is above the limit set in parameter 4-55 "Warning Reference High".
- Comparator 0 through 5: The signal outputs correspond to the logic output of [Main] menu parameter group 13-1x "Comparators".
- Logic Rule 0 through 5: The signal outputs correspond to the logic output of [Main] menu parameter group 13-4x "Logic Rules".
- Running reverse: CUE is running counterclockwise.
- Start command active: CUE has received an active start command, for example auto on, and a start command via digital input or bus is active or [Hand On]. It is not necessarily running.
- Drive in hand mode: CUE is in hand-on mode (as indicated by the indicator light above [Hand on]).
- Drive in auto mode: CUE is in auto-on mode (as indicated by the indicator light above [Auto on]).
- Preventive Maintenance: One or more of the preventive maintenance events has passed the time for the specified action.
- Deragging: Deragging procedure is active.
- AHF Capacitor Connect: Automatic control of AHF capacitor connect at low loads under 20 %.
- External Fan Control: External fan control is active.
- No-Flow: A no-flow situation or minimum speed situation has been detected.
- Dry Pump: A dry pump condition has been detected.
- End of Curve: A end of curve condition has been detected.
- Sleep Mode: CUE has entered sleep mode.
- Pipe Filling: Active when the pipe fill function is operating.

Analog outputs

The analog output (0-20 mA) can be set in [Main] menu parameter 6-50 to one of these indications:

- feedback value
- speed
- frequency
- motor current
- external setpoint input
- limit exceeded.

The analog output is set to not active by default.

- Feedback value: The output signal is a function of the actual feedback value.
- Speed: The output signal is a function of the actual pump speed.
- Frequency: The output signal is a function of the actual frequency.
- Motor current: The output signal is a function of the actual motor current.
- External setpoint input: The output signal is a function of the external setpoint input.
- Limit exceeded: The output signal is on/off when the limit is exceeded: Off = 0/4 mA and On = 20 mA.

MCB 114 sensor input module

The MCB 114 sensor input module offers three additional analog inputs for CUE:

- one analog 0/4-20 mA input for an additional sensor
- two analog Pt100/Pt1000 inputs for temperature sensors.

Sensor 2

The analog 0/4-20 mA input is used for these functions:

- Monitoring the measured value of sensor 2 (default setting).
- Measured value of sensor 2 used for control purpose. This makes differential pressure control possible by using measurements from sensor 1 and sensor 2 (setting by means of PC Tool).

Temperature sensors 1 and 2

The analog Pt100/Pt1000 inputs are used for monitoring these temperatures:

- drive-end motor bearing
- non-drive-end motor bearing
- other liquid 1
- other liquid 2
- motor windings
- pumped liquid
- ambient temperature.

Displays

MCB 114 input	Displays	
	Reading	Setting
Sensor 2	2.5	3.16
Temperature sensor	2.12	3.21
Temperature sensor	2.13	3.22

Further information

See also the TPE Installation and operating instructions.

Auto/manual restart after alarm

In case of an alarm, CUE will stop the pump. Pump operation will be resumed when the cause of the alarm has been remedied and the alarm has been reset automatically or manually.

CUE can be configured to activate and deactivate automatic restart in [Main] menu parameter 14-20, and in case of automatic reset, the delay between reset attempts is adjustable in [Main] menu parameter 14-21.

14. Factory settings of E-pumps

- • Function is enabled.
- ◑ Function is disabled.
- - Function is not available.

Settings	PE3, TPE3 D	TPE2, TPE2 D	TPE Series 2000 0.12 - 11 kW, 2-pole 0.12 - 7.5 kW, 4-pole	TPE Series 2000 15-22 kW, 2-pole 11 - 18.5 kW, 4-pole	TPE Series 1000 0.12 - 11 kW, 2-pole 0.12 - 7.5 kW, 4-pole	TPE Series 1000 15-22 kW, 2-pole 11 - 18.5 kW, 4-pole	Comments	Function description
"Setpoint"	Auto	67 %	58 %	58 %	67 %	67 %		Page 62
"Operating mode"	Normal	Normal	Normal	Normal	Normal	Normal		Page 63
"Control mode"	AutoAdapt	Constant curve	Proportional pressure	Proportional pressure	Constant curve	Constant curve		Page 63
"Date and time"	•	•	•		•			Page 88
"FLOW$_{LIMIT}$"	◑							Page 71
"Automatic night setback"	◑							Page 71
"Temperature influence"	◑							Page 83
"Buttons on product"	•	•	•	•	•	•		
"Controller"								
"Kp"	• [1]	0.5	0.5		0.5	0.5		Page 79
"Ti"	• [1]	0.5	0.5		0.5	0.5		
"Operating range"								
"Min."	25 %	25 %	25 %	25 %	25 %	25 %		Page 80
"Max."	100 %	100 %	110 %	110 %	110 %	110 %		
"Ramps"	◑	◑	◑	-	◑	-		Page 85
"Pump number"	•	•	•	•	•	•		Page 87
"Radio communication"	•	•	•		•	-		Page 87
"Sensor type"						•		Page 71
"Analog input 1"	◑	◑	◑	-	◑	-		Page 72
"Analog input 2"	◑	◑	◑	-	◑	-		
"Analog input 3"	◑	◑	◑	-	◑	-		
"Built-in Grundfos sensor"	•		•			-		Page 73
"Pt100/1000 input 1"	◑	◑	◑	-	◑	-		Page 74
"Pt100/1000 input 2"	◑	◑	◑	-	◑	-		
"Digital input 1"	◑	◑	◑	-	◑	-		Page 74
"Digital input 2"	◑	◑	◑	•	◑	•		
"Digital in/output 3"	◑	◑	◑	-	◑	-		Page 76
"Digital in/output 4"	◑	◑	◑	-	◑	-		
"Pulse flowmeter"	◑	◑	◑	-	◑	-		Page 85
"Predefined setpoint"	◑	◑	◑	-	◑	-		Page 83
"Analog output" [1]	◑	◑	◑	-	◑	-		Page 78
"External setpoint funct."	◑	◑	◑	•	◑	•		Page 81
"Signal relay 1"	◑	◑	◑	Alarm	◑	Alarm		Page 76
"Signal relay 2"	◑	◑	◑	Operation	◑	Operation		
"Limit 1 exceeded"	◑	◑	◑	-	◑	-		Page 84
"Limit 2 exceeded"	◑	◑	◑	-	◑	-		
"Standstill heating"	◑	◑	◑	◑	◑	◑		Page 86
"Motor bearing monitoring"	◑	◑	◑	◑	◑	◑		Page 86
"Pump name"	Grundfos	Grundfos	Grundfos	-	Grundfos			Page 90
"Connect code"								Page 90
"Unit configuration"	SI units	SI units	SI units	SI units	SI units	SI units		Page 88

Multipump factory setting for twin-pumps: Alternating operation on time.

Settings	TPE Series 2000 30-55 kW, 2-pole 22-55 kW, 4-pole	TPE Series 1000 30-55 kW, 2-pole 22-55 kW, 4-pole	Comments	Function description
"Setpoint"	81 %	100 %		
"Operating mode"	Normal	Normal		
"Control mode"	Proportional pressure	Open loop		
"Date and time"				
"$FLOW_{LIMIT}$"			–	
"Automatic night setback"				
"Temperature influence"		–		
"Buttons on product"	•	•		
"Controller"				
"Kp"	0.5	–	–	
"Ti"	0.5			
"Operating range"				
"Min."	25 %	25 %		
"Max."	100 %	100 %		
"Ramps"	•	•		
"Unit number"		–		
"Radio communication"		–		
"Sensor type"	4-20 mA	Not active		
"Analog input 1"	•	–		
"Analog input 2"	–	–		
"Analog input 3"	–	–		
"Built-in Grundfos sensor"				
"Pt100/1000 input 1"	–	–	–	
"Pt100/1000 input 2"	–	–		
"Digital input 1"	–	–		
"Digital input 2"	–	–		
"Digital in/output 1"	–	–		
"Digital in/output 2"	–	–		
"Digital input 3"	–	–		
"Digital input 4"	–	–		
"Pulse flowmeter"				
"Predefined setpoint"				
"Analog output"[1]	–	–		
"External setpoint funct."	–	–		
"Signal relay 1"	–	–		
"Signal relay 2"	–	–		
"Limit 1 exceeded"	–	–		
"Limit 2 exceeded"	–	–		
"Standstill heating"	–	–		
"Motor bearing monitoring"	–	–		
"Pump name"	–	–		
"Connect code"				
"Unit configuration"	SI units	SI units	–	

[1] Only available if sensor MCB 114 is fitted.

15. Communication

Communication with TPE2, TPE2 D, TPE3, TPE3 D, TPE, TPED pumps

Communication with TPE2, TPE2 D, TPE3, TPE3 D, TPE, TPED pumps is possible via a central building management system, remote control, Grundfos GO, or control panel.

Central building management system

The operator can communicate with a TPE2, TPE2 D, TPE3, TPE3 D, TPE, TPED pump at a distance. Communication can take place via a central building management system allowing the operator to monitor and change control modes and setpoint settings.

The CIU module can be used for all TPE versions, but the CIM module can only be used in some of the TPE pumps. See the table below.

TPE version	CIM	CIU
TPE2, TPE2 D, TPE3, TPE3 D	-	•
TPE up to 22 kW, 2-pole and 18.5 kW, 4 pole	-	•
TPED up to 11 kW, 2-pole and 7.5 kW, 4-pole	-	-
TPE from 30 kW, 2-pole and 22 kW, 4 pole		•
TPED from 15 kW, 2-pole and 11 kW, 4-pole		•

• Available.

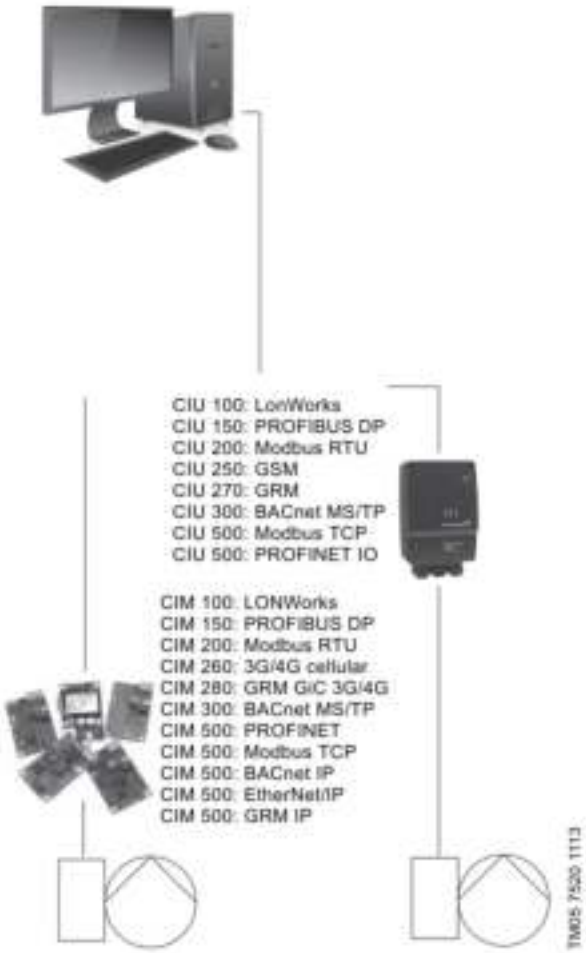

Fig. 126 Structure of a central building management system

Remote control

The operator can monitor and change control modes and settings of the pump with Grundfos GO. See *Grundfos GO* on page 58.

16. Speed regulation of TPE, TPED, TPE2, TPE2 D, TPE3, TPE3 D pumps

Affinity equations

Normally, the pumps are used in applications characterised by a variable flow rate. Consequently, you cannot select a pump that is constantly operating at its optimum efficiency.

In order to achieve optimum operating economy, the duty point must be close to the optimum efficiency, eta, for most operating hours.

Between the minimum and maximum performance curves, the pumps have an infinite number of performance curves each representing a specific speed. Therefore, you may not be able to select a duty point close to the maximum curve.

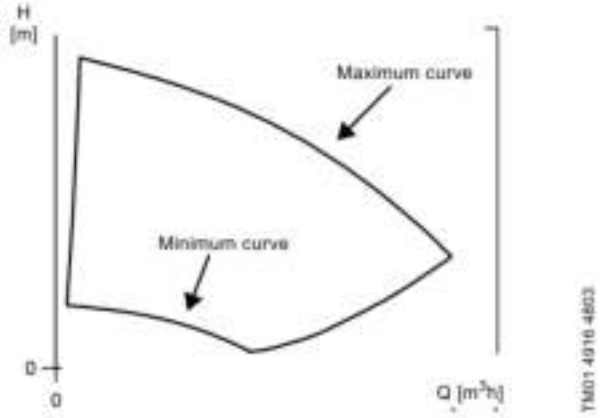

Fig. 127 Minimum and maximum performance curves

In situations where you can select a duty point close to the maximum curve, use the affinity equations below. The head, H, the flow rate, Q and the input power, P, are the appropriate variables you need for calculating the motor speed, n.

Note: The approximated formulas apply on condition that the system characteristic remains unchanged for the rated motor speed and the current motor speed, and that it is based on the following formula: H is equal to k x Q^2 where k is a constant.

The power equation implies that the pump efficiency is unchanged at the two speeds. In practice, this is not quite correct.

Finally, it is worth noting that the efficiencies of the frequency converter and the motor must also be taken into account if you want a precise calculation of the power saving resulting from a reduction of the pump speed.

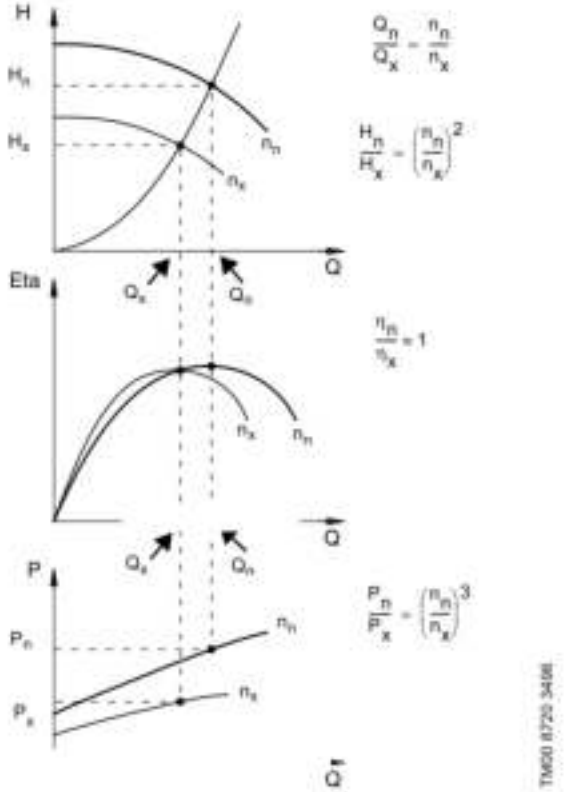

$$\frac{Q_n}{Q_x} = \frac{n_n}{n_x}$$

$$\frac{H_n}{H_x} = \left(\frac{n_n}{n_x}\right)^2$$

$$\frac{\eta_n}{\eta_x} = 1$$

$$\frac{P_n}{P_x} = \left(\frac{n_n}{n_x}\right)^3$$

Fig. 128 Affinity equations

Legend

H_n	Rated head in metres
H_x	Current head in metres
Q_n	Rated flow rate in m^3/h
Q_x	Current flow rate in m^3/h
n_n	Rated motor speed in min^{-1}
n_x	Current motor speed in min^{-1}
η_n	Rated efficiency in %
η_x	Current efficiency in %
P_n	Rated power in kW
P_x	Current power in kW

Grundfos Product Center

Grundfos Product Center can help you select the right pump according to your requirements. See page 282.

17. Control of pumps in parallel

In some applications, parallel pump operation is required for one or more of the following reasons:

- One pump cannot achieve the required performance, flow rate.
- Standby performance is required to ensure reliability of supply.
- Overall efficiency needs to be improved in case of big variations in the flow demand.

The table below lists the different possibilities of controlling pumps connected in parallel.

Parallel-operation control possibilities	TP	TPE2	TPE2 D	TPE3	TPE3 D	TPE, TPED Series 2000				TPE, TPED Series 1000				TPE Series 2000 TPE Series 1000
						0.12 - 11 kW, 2-pole 0.12 - 7.5 kW, 4-pole		15-22 kW, 2-pole 11 - 18.5 kW, 4-pole		0.12 - 11 kW, 2-pole 0.12 - 7.5 kW, 4-pole		15-22 kW, 2-pole 11 - 18.5 kW, 4-pole		30-55 kW, 2-pole 22-55 kW, 4-pole
	TP	TPE2	TPE2 D	TPE3	TPE3 D	TPE	TPED	TPE	TPED	TPE	TPED	TPE	TPED	TPE
Built-in alternation/ standby function		•	•	•	•	•	•	❍	•	•	•	❍	•	•
Built-in parallel operation function		•	•	•	•	•				•				
Control MPC 	•	•								•		•		•
Control MPC Series 2000 				•		•		•						

• Available.
❍ Available on request.

Alternation/standby function

The alternation/standby function is activated from factory and "Alternating" mode is selected as default. See pages and 35 and 39.

Pumps connected to Control MPC

You can connect TP, TPE Series 1000, TPE2 pumps directly to Grundfos Control MPC.

Control MPC incorporates a CU 352 control unit that can control up to six pumps.

By means of an external sensor, Control MPC can ensure optimum adaptation of the performance to the demand by closed-loop control of these parameters:

- proportional differential pressure
- constant differential pressure
- differential pressure (remote)
- flow rate
- temperature.

CU 352 incorporates features such as those below:

Startup wizard

Correct installation and commissioning is a prerequisite for attaining optimum performance of the system and trouble-free operation year in and year out.

During commissioning of the system, a startup wizard is shown on the display of CU 352. The wizard guides the operator through the various steps via a series of dialogue boxes to ensure that all settings are done in the correct sequence.

Application-optimised software

CU 352 incorporates application-optimised software which helps you set your system to the application in question.

Furthermore, navigating through the menus of the control unit is done in a user-friendly way. You do not need any training to be able to set and monitor the system.

Ethernet connection

CU 352 incorporates an ethernet connection which makes it possible to get full and unlimited access to the setting and monitoring of the system via a remote PC.

Service port, GENI TTL

The service port of CU 352 enables easy access to updating software and data logging in service situations.

External communication

Control MPC enables communication with other fieldbus protocols. In order to communicate with other fieldbus protocols, a GENIbus module and a gateway are required.

Control MPC can communicate with LonWorks, PROFIBUS, Modbus, BACnet, GSM/GPRS or GRM via Grundfos CIU.

Pumps connected to Control MPC Series 2000

TPE Series 2000, TPE3 pumps are connected directly to Grundfos Control MPC Series 2000 via GENIbus.

Control MPC Series 2000 incorporates a CU 352 control unit that can control up to six pumps.

All pumps must be of the same type and size.

Control MPC Series 2000 is used for controlling circulator pumps in heating and air-conditioning applications.

Control MPC Series 2000 ensures optimal adaptation of the performance to the demand by closed-loop control of these parameters:

- proportional differential pressure
- constant differential pressure.

By means of an external sensor Control MPC Series 2000 can also ensure optimum adaptation of the performance to the demand by closed-loop control of these parameters:

- differential pressure (remote)
- flow rate
- temperature.

Note: For further information about Control MPC and Control MPC Series 2000, see the data booklet "Control MPC". The data booklet is available online in Grundfos Product Center. See page 282.

18. Grundfos CUE

TP pumps connected to Grundfos CUE, external frequency converters

Gr-1031505

Fig. 129 Grundfos CUE

Grundfos CUE is a complete range of wall-mounted frequency converters for pump control in a wide range of applications.

The frequency converter provides a variety of benefits, such as these:

- Grundfos E-pump functionality and user interface
- application- and pump family-related functions
- increased comfort compared to fixed-speed pump solutions
- simple installation and commissioning compared to standard frequency converters
- speed control of pumps up to 250 kW.

Functions

Intuitive startup guide

The startup guide enables easy installation and commissioning as well as plug-and-pump convenience. Few settings need to be made by the installer as the rest is done automatically or preset from the factory.

Smart user interface

Gr-1031488

Fig. 130 Grundfos CUE user interface

The frequency converter features a unique user-friendly control panel with graphic display and easy-to-use buttons.

Controlling the value you choose

The frequency converter has a built-in PI controller offering closed-loop control of a desired value, such as these:

- constant differential pressure
- proportional pressure
- constant temperature
- constant pressure
- constant flow rate.

Wide product range

The CUE product range is quite comprehensive, covering five different voltage ranges, enclosure classes IP20/21 (Nema 1) and IP54/55 (Nema 12), and a wide range of output powers.

The table below provides a general overview.

Input voltage [V]	Output voltage [V]	Motor [kW]
1 x 200-240	3 x 200-240	1.1 - 7.5
3 x 200-240	3 x 200-240	0.75 - 45
3 x 380-500	3 x 380-500	0.55 - 250
3 x 525-600	3 x 525-600	0.75 - 7.5
3 x 525-690	3 x 525-690	11-250

External communication

The frequency converter can communicate with LonWorks, PROFIBUS, Modbus, BACnet or GSM/GPRS via Grundfos CIU.

19. Motor data

Motors

Motors fitted on TP pumps are totally enclosed, fan-cooled motors with main dimensions to IEC and DIN standards. Electrical tolerances to IEC 34.

Mounting designation

Pump type	Mounting designation - IEC 34-7
TP Series 100 TP Series 200	IM 3601 (IM B 14) / IM 3611 (IM V 18)
TP Series 300	IM 3001 (IM B 5) / IM 3011 (IM [illegible]

Relative humidity:	Maximum 95 %
Enclosure class:	IP55
Insulation class:	F (IEC 85)
Ambient temperature:	Maximum 55 °C, Siemens motors Maximum 60 °C, MG motors Maximum 50 °C, 2-pole MGE motors below 11 kW and 4-pole MGE motors below 7.5 kW Maximum 40 °C, other motors Maximum 45 °C, Siemens motors with integrated CUE Minimum -30 °C

If the pump is installed in humid locations, open the lowest drain hole in the motor. This reduces the motor enclosure class to IP44.

High-efficiency motors

TP pumps are fitted with high-efficiency motors.

TP, TPD pumps with three-phase motors from 0.75 to 375 kW are fitted with IE3 motors. TP, TPD pumps are also available with IE4 motors from 2.2 to 132 kW.

TPE2, TPE2 D, TPE3, TPE3 D pumps are fitted with Grundfos permanent-magnet MGE motors that have motor efficiency class IE5 according to IEC 60034-30-2.

TPE, TPED pumps with 2-pole motors up to 11 kW and 4-pole motors up to 7.5 kW are fitted with Grundfos permanent-magnet MGE motors that have motor efficiency class IE5 according to IEC 60034-30-2.

TPE, TPED pumps with three-phase 2-pole motors from 15 to 22 kW are fitted with motors equivalent to IE3.

TPE, TPED pumps with three-phase 4-pole motors from 11 to 15 kW are fitted with motors equivalent to IE3.

TPE, TPED pumps with 4-pole, three-phase motors of 18.5 kW are fitted with motors equivalent to IE2.

TPE pumps with three-phase 2-pole motors from 30 to 55 kW are fitted with motors equivalent to IE3 or IE4.

TPE pumps with three-phase 4-pole motors from 22 to 55 kW are fitted with motors equivalent to IE3 or IE4.

Motor range

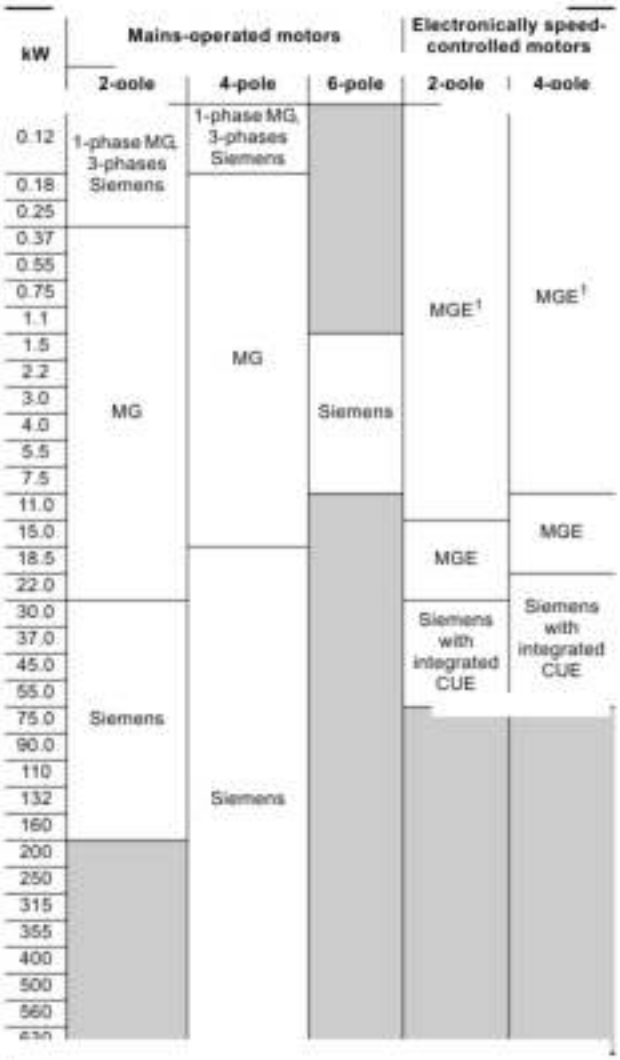

[1] IE5 motors

MG and MGE are Grundfos motor brands.

Siemens is a sourced high-quality motor brand.

The grey-shaded areas indicate non-available motors.

Electrical data, mains-operated motors

2-pole, 1 x 220-230/240 V

Motor [kW]	$I_{1/1}$ [A]	Cos φ 1/1	η [%]	n [min⁻¹]	$\frac{I_{Start}}{I_{1/1}}$
0.12	1.05	1.0	65	2800-2840	3.2 - 3.6
0.18	1.34	0.94	62	2895	4.3
0.25	2.05 / 2	0.99	58	2800	-
0.37	2.95 / 2.7	0.99	60	2770	2.8
0.55	4 / 3.65	0.99	66	2750	2.8
0.75	5.1 / 4.75	0.99	69	2780	3.0
1.1	7.4 / 6.7	0.98 - 0.99	-	2770	3.9 / 3.9
1.5	9.9 / 8.9	0.98 - 0.99	72-74	2750-2740	3.9 / 3.9

2-pole, 3 x 220-240/380-415 V, IE3 from 0.75 kW

Motor [kW]	$I_{1/1}$ [A]	Cos φ 1/1	η [%]	n [min⁻¹]	$\frac{I_{Start}}{I_{1/1}}$
0.12	0.59 / 0.34	0.8 - 0.72	71	2800-2850	4.2 - 4.6
0.18	0.9 / 0.52	0.79 - 0.71	67	2800-2850	4.5
0.25	1.18 / 0.68	0.81 - 0.72	73	2800-2850	4.0 - 4.4
0.37	1.74 / 1	0.8 - 0.7	78.5	2850-2880	4.9 - 5.3
0.55	2.5 / 1.44	0.8 - 0.7	80	2830-2850	1.9
0.75	3.3 / 1.9	0.81 - 0.71	80.7	2840-2870	5.8 - 6.2
1.1	4.35 - 2.5	0.83 - 0.76	82.7	2840-2870	4.5 - 5.0
1.5	5.45 / 3.15	0.87 - 0.82	84.2	2890-2910	8.5 - 9.3
2.2	7.70 / 4.45	0.89 - 0.87	85.9	2890-2910	8.5 - 9.5
3.0	11.0 / 6.3	0.87 - 0.82	87.1	2900-2920	8.4 - 9.2
4.0	13.6 / 7.9	0.87	88.1	2920-2940	10 - 11.1
5.5	19.0 - 11.0	0.87 - 0.82	89.2	2920-2940	10.8 - 11.8
7.5	25.0 - 24.2 / 14.4 - 14.0	0.88 - 0.82	90.4	2910-2920	7.8 - 9.1
11.0	36.0 - 34.5 / 20.8 - 19.8	0.88 - 0.84	91.2	2940-2950	6.6 - 7.8
15.0	48.5 - 45.0 / 28.0 - 26.0	0.89 - 0.87	91.9	2930-2950	6.6 - 7.8
18.5	59.0 - 53.5 / 34.0 - 31.0	0.90 - 0.89	92.4	2930-2950	7.1 - 8.5
22.0	68.5 / 39.5	0.90	92.7	2950	8.3

2-pole, 3 x 220-240/380-420 V, IE3

Motor [kW]	$I_{1/1}$ [A]	Cos φ 1/1	η [%]	n [min⁻¹]	$\frac{I_{Start}}{I_{1/1}}$
30.0	94.0 - 54.0	0.9	93.3	2955	6.6
37.0	114.0 - 66.0	0.9	93.7	2955	6.7
45.0	136.0 - 78.0	0.9	94.0	2960	6.9
55.0	166.0 - 95.0	0.9	94.3	2975	6.7
75.0	220.0 - 128.0	0.9	94.7	2975	6.8

2-pole, 3 x 380-415/660-690 V, IE3

Motor [kW]	$I_{1/1}$ [A]	Cos φ 1/1	η [%]	n [min⁻¹]	$\frac{I_{Start}}{I_{1/1}}$
2.2	4.45	0.89 - 0.87	85.9	2890-2910	8.5 - 9.5
3.0	6.3	0.87 - 0.82	87.1	2900-2920	8.4 - 9.2
4.0	7.9	0.87	88.1	2920-2940	10 - 11
5.5	11.0	0.87 - 0.82	89.2	2920-2940	10.8 - 11.8
7.5	14.4 - 14.0 / 8.3 - 8.1	0.88 - 0.82	90.4	2910-2920	7.8 - 9.1
11.0	20.8 - 19.8 / 12.0 - 11.8	0.88 - 0.84	91.2	2940-2950	6.6 - 7.8
15.0	28.0 - 26.0 / 16.2 - 15.6	0.89 - 0.87	91.9	2930-2950	6.6 - 7.8
18.5	34.0 - 31.0 / 19.6 - 18.8	0.90 - 0.89	92.4	2930-2950	7.1 - 8.5
22.0	39.5 / 22.8	0.90	92.7	2950	8.3

2-pole, 3 x 380-420/660-725 V, IE3

Motor [kW]	$I_{1/1}$ [A]	Cos φ 1/1	η [%]	n [min⁻¹]	$\frac{I_{Start}}{I_{1/1}}$
30.0	94.0 - 51.0	0.9	93.3	2955	6.6
37.0	66.0 - 38.0	0.9	93.7	2955	6.7
45.0	78.0 - 45.0	0.9	94.0	2960	6.9
55.0	95.0 - 55.0	0.9	94.3	2975	6.7
75.0	128.0 - 74.0	0.9	94.7	2975	6.8
90.0	152.0 - 88.0	0.9	95.0	2975	7.2
110.0	184.0 - 106.0	0.9	95.2	2980	7.1
132.0	220.0 - 128.0	0.9	95.4	2980	7.2
160.0	265.0 - 154.0	0.9	95.6	2980	7.8

4-pole, 1 x 220-230/240 V

Motor [kW]	$I_{1/1}$ [A]	Cos φ 1/1	η [%]	n [min⁻¹]	$\frac{I_{Start}}{I_{1/1}}$
0.12	0.99	0.99	53.1	1434	2.58
0.18	1.62	0.97	54	1350-1370	2.0
0.25	2.14	0.97	57	1350-1370	2.2
0.37	2.85	0.97	62	1350-1370	2.4
0.55	4	0.97	66	1350-1370	2.6
0.75	5.45	0.96	71	1390-1410	3.2
1.1	7	0.96	75	1420-1430	3.9

4-pole, 3 x 220-240/380-415 V, IE3 from 0.75 kW

Motor [kW]	$I_{1/1}$ [A]	Cos φ 1/1	η [%]	n [min⁻¹]	$\frac{I_{Start}}{I_{1/1}}$
0.12	0.78 / 0.45	0.67	54	1380	3.2
0.25	1.48 / 0.85	0.75 - 0.65	69	1400-1420	4.0 - 4.4
0.37	1.9 / 1.1	0.77 - 0.67	71	1400-1420	4.0 - 4.4
0.55	2.6 / 1.5	0.79 - 0.7	77	1390-1410	4.3 - 4.7
0.75	3.3 / 1.9	0.76 - 0.71	82.5	1440-1450	6.6 - 7.2
1.1	4.85 / 2.0	0.71 - 0.64	84.1	1450-1460	8.2 - 9.0
1.5	6.15 - 6.3 / 3.55 - 3.65	0.75 - 0.68	85.3	1450-1460	7.3 - 7.9
2.2	8.5 / 4.9	0.79 - 0.73	86.7	1450	6.0 - 6.6
3.0	11.0 / 6.3	0.82 - 0.76	87.7	1440-1450	7.0 - 7.7
4.0	16.2 / 9.3	0.75 - 0.68	88.6	1460	7.9 - 8.7
5.5	19.0 / 11.0	0.86 - 0.80	89.6	1460	7.6
7.5	26.0 - 24.6 / 14.9 - 14.2	0.86 - 0.82	90.4	1460	6.8 - 7.8
11.0	36.5 - 35.5 / 21.2 - 20.4	0.86 - 0.81	91.4	1470-1470	7.1 - 8.1
15.0	50.0 - 48.5 / 29.0 - 28.0	0.86 - 0.82	92.1	1460-1470	7.6 - 8.7

4-pole, 3 x 220-240/380-420 V, IE3

Motor [kW]	$I_{1/1}$ [A]	Cos φ 1/1	η [%]	n [min⁻¹]	$\frac{I_{Start}}{I_{1/1}}$
18.5	60.0 - 34.5	0.8	92.4	1765	6.2
22.0	71.0 - 41.0	0.8	92.4	1765	6.0
30.0	95.5 - 55.0	0.9	93.0	1765	6.1

4-pole, 3 x 380-415/660-690 V, IE3

Motor [kW]	$I_{1/1}$ [A]	Cos φ 1/1	η [%]	n [min⁻¹]	$\frac{I_{Start}}{I_{1/1}}$
2.2	1.9	0.76 - 0.71	82.5	1440-1450	6.6 - 7.2
3.0	6.3	0.82 - 0.76	87.7	1440-1450	7.0 - 7.7
4.0	9.3	0.75 - 0.68	88.6	1460	7.9 - 8.7
5.5	11.0 - 11.0 / 6.35 - 6.35	0.86 - 0.80	89.6	1460	7.0 - 7.6
7.5	14.9 - 14.2 / 8.6 - 8.4	0.86 - 0.82	90.4	1460	6.8 - 7.8
11.0	21.2 - 20.4 / 12.2 - 12.0	0.86 - 0.81	91.4	1460-1470	7.1 - 8.1
15.0	29.0 - 28.0 / 16.8 - 16.4	0.86 - 0.82	92.1	1460-1470	7.6 - 8.7

4-pole, 3 x 380-420/660-725 V, IE3 up to 355 kW

Motor [kW]	$I_{1/1}$ [A]	Cos φ 1/1	η [%]	n [min⁻¹]	$\frac{I_{Start}}{I_{1/1}}$
18.5	35.0 - 20.5	0.8	92.6	1470	6.9
22.0	41.0 - 24.0	0.8	93.0	1470	6.8
30.0	55.0 - 32.0	0.8	93.6	1470	6.9
37.0	66.0 - 38.5	0.9	93.9	1480	6.4
45.0	80.0 - 46.5	0.9	94.2	1480	6.4
55.0	96.0 - 56.0	0.9	94.6	1480	6.8
75.0	134.0 - 77.0	0.9	95.0	1485	6.9
90.0	158.0 - 91.0	0.9	95.2	1485	7.2
110.0	192.0 - 112.0	0.9	95.4	1490	6.8
132.0	230.0 - 134.0	0.9	95.6	1490	7.3
160.0	275.0 - 162.0	0.9	95.8	1490	7.3
200.0	340.0 - 198.0	0.9	96.0	1490	7.4
250.0	430.0 - 250.0	0.9	96.0	1490	7.7
315.0	550.0 - 320.0	0.9	96.0	1490	7.9
355.0	630.0 - 365.0	0.9	96.1	1490	6.5
400.0	690.0 / 400.0	0.87	-	1488	-
500.0	850.0 / 490.0	0.88	-	1488	-
560.0	950.0 / 550.0	0.88	-	1492	-
630.0	1060.0 / 610.0	0.88	-	1492	-

6-pole, 3 x 220-240/380-415 V, IE3

Motor [kW]	$I_{1/1}$ [A]	Cos φ 1/1	η [%]	n [min⁻¹]	$\frac{I_{Start}}{I_{1/1}}$
1.5	6.6 - 5.9 / 3.8 - 3.4	0.79	86.5	1160	5.6
2.2	9.17 - 8.3 / 5.3 - 4.8	0.79	87.5	1160	6.8
3.0	12.0 - 11.0 / 7.0 - 6.4	0.78	87.5	1165	6.9
4.0	15.7 - 14.2 / 9.1 - 8.2	0.79	87.5	1160	6.5
5.5	21.0 - 19.3 / 12.2 - 11.0	0.81	89.5	1160	6.6
7.5	27.7 - 25.4 / 16.0 - 14.5	0.82	89.5	1165	6.3

6-pole, 3 x 380-415/660-690 V, IE3

Motor [kW]	$I_{1/1}$ [A]	Cos φ 1/1	η [%]	n [min⁻¹]	$\frac{I_{Start}}{I_{1/1}}$
2.2	5.3 - 4.8 / 3.0 - 2.9	0.75	84.3	970	6.8
3.0	7.0 - 6.4 / 4.05 - 3.9	0.76	85.6	975	6.9
4.0	9.1 - 8.2 / 5.2 - 4.95	0.77	86.8	970	6.5
5.5	12.2 - 11.0 / 7.0 - 6.7	0.78	88	970	6.6
7.5	16.0 - 14.5 / 9.2 - 8.8	0.80	89.1	975	6.3

2-pole, 3 x 220-240/380-415 V, IE4

Motor [kW]	$I_{1/1}$ [A]	Cos φ 1/1	η [%]	n [min⁻¹]	$\frac{I_{Start}}{I_{1/1}}$
3	9.90 - 5.70	0.86	89.1	2.920	9.8
4	12.6 - 7.20	0.89	90.0	2.955	10.2
5.5	18.0 - 10.4	0.84	90.9	2.960	10.1
7.5	22.8 - 13.2	0.90	91.7	2.955	10.3
11	33.5 - 19.2	0.89	92.6	2.960	9.0
15	45.0 - 26.0	0.90	93.3	2.960	10.4
18.5	54.5 - 31.5	0.91	93.7	2.960	10.5
22	66.5 - 38.0	0.88	94.0	2.955	9.5
30	93.5 - 53.5	0.85	94.5	2.955	8.4

2-pole, 3 x 380-420/660-725 V, IE4

Motor [kW]	$I_{1/1}$ [A]	Cos φ 1/1	η [%]	n [min⁻¹]	$\frac{I_{Start}}{I_{1/1}}$
3	5.70 - 3.30	0.86	89.1	2.920	9.8
4	7.20 - 4.15	0.89	90.0	2.955	10.2
5.5	10.4 - 6.00	0.84	90.9	2.960	10.1
7.5	13.2 - 7.60	0.90	91.7	2.955	10.3
11	19.4 - 11.2	0.89	92.6	2.960	9.0
15	26.0 - 15.0	0.90	93.3	2.960	10.4
18.5	31.5 - 18.2	0.91	93.7	2.960	10.5
22	38.5 - 22.0	0.88	94.0	2.955	9.5
30	54.0 - 31.0	0.85	94.5	2.955	8.4
37	64.0 - 37.0	0.88	94.8	2.955	8.9
45	80.0 - 46.5	0.85	95.0	2.970	8.8
55	96.0 - 55.0	0.88	95.3	2.975	7.5
75	128 - 74.0	0.89	95.6	2.980	8.3
90	152 - 88.0	0.89	95.8	2.980	8.2
110	184 - 108	0.90	96.0	2.985	8.7
132	220 - 128	0.90	96.2	2.990	10.5
160	260 - 152	0.92	96.3	2.990	10.3
200	325 - 188	0.92	96.6	2.985	9.9
250	430 - 250	0.88	96.5	2.986	9.3
315	550 - 320	0.87	96.5	2.986	9.9
355	610 - 350	0.89	96.5	2.988	8.9
400	660 - 380	0.92	96.5	2.986	8.5
500	850 - 495	0.89	96.5	2.988	8.9

4-pole, 3 x 220-240/380-415 V, IE4

Motor [kW]	$I_{1/1}$ [A]	Cos φ 1/1	η [%]	n [min⁻¹]	$\frac{I_{Start}}{I_{1/1}}$
2.2	7.8 - 4.5	0.8	89.5	1465	10.2
3	10.2 - 5.9	0.8	90.4	1460	8.8
4	13.6 - 7.8	0.8	91.1	1465	8.3
5.5	18.0 - 10.4	0.8	91.9	1470	8.4
7.5	25.0 - 14.4	0.8	92.6	1470	8.4
11	36.5 - 20.8	0.8	93.3	1480	9.0
15	50.0 - 29.0	0.8	93.9	1480	9.3
18.5	60.5 - 34.5	0.8	94.2	1470	8.2
22	72.5 - 42.5	0.8	94.5	1475	8.6
30	98.5 - 57.0	0.8	94.9	1480	9.3

4-pole, 3 x 380-420/660-725 V, IE4

Motor [kW]	$I_{1/1}$ [A]	Cos φ 1/1	η [%]	n [min⁻¹]	$\frac{I_{Start}}{I_{1/1}}$
2.2	4.5 - 2.6	0.79	89.5	1.465	10.2
3	5.9 - 3.4	0.81	90.4	1.460	8.8
4	7.8 - 4.5	0.81	91.1	1.465	8.3
5.5	10.4 - 6.0	0.83	91.9	1.470	8.4
7.5	14.4 - 8.3	0.81	92.6	1.470	8.9
11	21.0 - 12.0	0.8	93.3	1.480	9.0
15	29.0 - 16.6	0.8	93.9	1.480	9.3
18.5	35.0 - 20.0	0.8	94.2	1.470	8.2
22	41.5 - 24.0	0.8	94.5	1.475	8.6
30	57.0 - 33.0	0.8	94.9	1.480	9.3
37	68.0 - 39.0	0.8	95.2	1.485	9.0
45	81.0 - 47.5	0.8	95.4	1.485	8.2
55	96.0 - 56.0	0.9	95.7	1.485	8.2
75	134 - 77	0.9	96.0	1.490	9.0
90	158 - 91	0.9	96.1	1.490	8.9
110	192 - 112	0.9	96.3	1.490	8.6
132	226 - 132	0.9	96.4	1.490	8.7
160	280 - 162	0.9	96.6	1.490	8.8
200	345 - 200	0.9	96.7	1.490	8.9
250	445 - 260	0.85	96.7	1.490	7.9
315	580 - 335	0.83	96.7	1.490	8.5
355	630 - 360	0.86	96.7	1.492	7.9
400	720 - 420	0.84	96.7	1.492	8.4
500	880 - 510	0.86	96.7	1.491	8.1

Electrical data, speed-controlled motors

1 x 200-240 V, TPE2, TPE2 D, TPE3, TPE3 D pumps

Pump type	Motor [kW]	$I_{1/1}$ [A]
TPE2, TPE2 D, TPE3, TPE3 D 32-80	0.25	1.56
TPE2, TPE2 D, TPE3, TPE3 D 32-120	0.25	1.56
TPE2, TPE2 D, TPE3, TPE3 D 32-150	0.37	2.29
TPE2, TPE2 D, TPE3, TPE3 D 32-180	0.55	3.15
TPE2, TPE2 D, TPE3, TPE3 D 32-200	0.75	4.17
TPE2, TPE2 D, TPE3, TPE3 D 40-80	0.25	1.56
TPE2, TPE2 D, TPE3, TPE3 D 40-120	0.37	2.17
TPE2, TPE2 D, TPE3, TPE3 D 40-150	0.55	3.04
TPE2, TPE2 D, TPE3, TPE3 D 40-180	0.75	4.17
TPE2, TPE2 D, TPE3, TPE3 D 40-200	1.1	5.97
TPE2, TPE2 D, TPE3, TPE3 D 40-240	1.5	8.00
TPE2, TPE2 D, TPE3, TPE3 D 50-60	0.37	2.17
TPE2, TPE2 D, TPE3, TPE3 D 50-80	0.37	2.17
TPE2, TPE2 D, TPE3, TPE3 D 50-120	0.55	3.04
TPE2, TPE2 D, TPE3, TPE3 D 50-150	0.75	4.1
TPE2, TPE2 D, TPE3, TPE3 D 50-180	1.1	5.97
TPE2, TPE2 D, TPE3, TPE3 D 50-200	1.5	8.00
TPE2, TPE2 D, TPE3, TPE3 D 65-60	0.37	2.17
TPE2, TPE2 D, TPE3, TPE3 D 65-80	0.55	3.04
TPE2, TPE2 D, TPE3, TPE3 D 65-120	0.75	4.10
TPE2, TPE2 D, TPE3, TPE3 D 65-150	1.1	5.97
TPE2, TPE2 D, TPE3, TPE3 D 65-180	1.5	8.00
TPE2, TPE2 D, TPE3, TPE3 D 80-40	0.25	1.46
TPE2, TPE2 D, TPE3, TPE3 D 80-120	1.1	5.88
TPE2, TPE2 D, TPE3, TPE3 D 80-150	1.5	7.97
TPE2, TPE2 D, TPE3, TPE3 D 100-40	0.25	1.46
TPE2, TPE2 D, TPE3, TPE3 D 100-120	1.1	5.88
TPE2, TPE2 D, TPE3, TPE3 D 100-150	1.5	7.97

3 x 380-500 V, TPE2, TPE2 D, TPE3, TPE3 D pumps

Pump type	Motor [kW]	$I_{1/1}$ [A]
TPE2, TPE2 D, TPE3, TPE3 D 32-80	0.25	0.88
TPE2, TPE2 D, TPE3, TPE3 D 32-120	0.25	0.88
TPE2, TPE2 D, TPE3, TPE3 D 32-150	0.37	1.09
TPE2, TPE2 D, TPE3, TPE3 D 32-180	0.55	1.34
TPE2, TPE2 D, TPE3, TPE3 D 32-200	0.75	1.68
TPE2, TPE2 D, TPE3, TPE3 D 40-80	0.25	0.88
TPE2, TPE2 D, TPE3, TPE3 D 40-120	0.37	1.09
TPE2, TPE2 D, TPE3, TPE3 D 40-150	0.55	1.34
TPE2, TPE2 D, TPE3, TPE3 D 40-180	0.75	1.68
TPE2, TPE2 D, TPE3, TPE3 D 40-200	1.1	2.26
TPE2, TPE2 D, TPE3, TPE3 D 40-240	1.5	2.96
TPE2, TPE2 D, TPE3, TPE3 D 50-60	0.37	1.04
TPE2, TPE2 D, TPE3, TPE3 D 50-80	0.37	1.04
TPE2, TPE2 D, TPE3, TPE3 D 50-120	0.55	1.34
TPE2, TPE2 D, TPE3, TPE3 D 50-150	0.75	1.68
TPE2, TPE2 D, TPE3, TPE3 D 50-180	1.1	2.26
TPE2, TPE2 D, TPE3, TPE3 D 50-200	1.5	2.96
TPE2, TPE2 D, TPE3, TPE3 D 50-240	2.2	4.22
TPE2, TPE2 D, TPE3, TPE3 D 65-60	0.37	1.04
TPE2, TPE2 D, TPE3, TPE3 D 65-80	0.55	1.34
TPE2, TPE2 D, TPE3, TPE3 D 65-120	0.75	1.68
TPE2, TPE2 D, TPE3, TPE3 D 65-150	1.1	2.15
TPE2, TPE2 D, TPE3, TPE3 D 65-180	1.5	2.96
TPE2, TPE2 D, TPE3, TPE3 D 65-200	2.2	4.22
TPE2, TPE2 D, TPE3, TPE3 D 80-40	0.25	0.82
TPE2, TPE2 D, TPE3, TPE3 D 80-120	1.1	2.15
TPE2, TPE2 D, TPE3, TPE3 D 80-150	1.5	2.82
TPE2, TPE2 D, TPE3, TPE3 D 80-180	2.2	4.03
TPE2, TPE2 D, TPE3, TPE3 D 100-40	0.25	0.82
TPE2, TPE2 D, TPE3, TPE3 D 100-120	1.1	2.15
TPE2, TPE2 D, TPE3, TPE3 D 100-150	1.5	2.82
TPE2, TPE2 D, TPE3, TPE3 D 100-180	2.2	4.03

4-pole, 1 x 200-240 V, 2000 min^{-1}

Motor [kW]	$I_{1/1}$ [A]
0.12	1.65 - 1.40
0.18	1.65 - 1.40
0.25	1.65 - 1.40
0.37	2.40 - 2.00
0.55	3.40 - 2.85
0.75	4.50 - 3.80

2-pole, 1 x 200-240 V, 4000 min^{-1}

Motor [kW]	$I_{1/1}$ [A]
0.12	1.70 - 1.45
0.18	1.70 - 1.45
0.25	1.70 - 1.45
0.37	2.40 - 2.10
0.55	3.40 - 2.90
0.75	4.60 - 3.80
1.1	6.55 - 5.45
1.5	8.90 - 7.45

4-pole, 3 x 380-500 V, 2000 min^{-1}

Motor [kW]	$I_{1/1}$ [A]
0.12	0.85 - 0.80
0.18	0.85 - 0.80
0.25	0.85 - 0.80
0.37	1.00 - 0.90
0.55	1.20 - 1.10
0.75	1.55 - 1.40
1.1	2.20 - 1.90
1.5	2.90 - 2.50
2.2	4.30 - 3.60
3	5.80 - 4.60
4	7.70 - 6.00
5.5	10.5 - 8.40
7.5	14.1 - 11.1

2-pole, 3 x 380-500 V, 4000 min^{-1}

Motor [kW]	$I_{1/1}$ [A]
0.12	0.85 - 0.80
0.18	0.85 - 0.80
0.25	0.85 - 0.80
0.37	1.00 - 0.90
0.55	1.30 - 1.10
0.75	1.55 - 1.30
1.1	2.15 - 1.80
1.5	2.90 - 2.40
2.2	4.15 - 3.40
3	5.80 - 4.80
4	7.60 - 6.20
5.5	10.3 - 8.20
7.5	14.1 - 11.2
11	20.3 - 16.0

2-pole, 1 x 200-240 V, 2900 min^{-1}

Motor [kW]	$I_{1/1}$ [A]
0.12	3.0 - 2.5
0.25	3.0 - 2.5
0.37	2.7 - 2.5
0.55	3.9 - 3.6
0.75	5.1 - 4.7
1.1	7.1 - 6.6

2-pole, 3 x 380-480 V, 2900 min^{-1}

Motor [kW]	$I_{1/1}$ [A]
15.0	30.0 - 26.0
18.5	37.0 - 31.0
22.0	43.5 - 35.0

4-pole, 3 x 380-480 V, 1450 min^{-1}

Motor [kW]	$I_{1/1}$ [A]
11.0	22.0 - 17.8
15.0	30.0 - 25.4
18.5	37.0 - 30.0

20. Installation

Mechanical installation

You can install TP pumps with motors smaller than 11 kW in horizontal or vertical pipes.

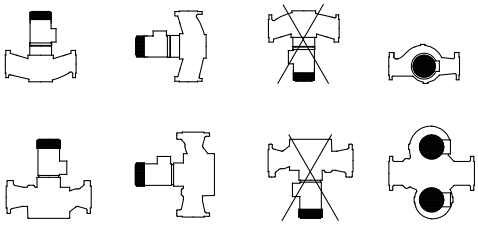

TM00 3734 0897

Fig. 131 Installation of motor sizes smaller than 11 kW

You can suspend pumps with motors smaller than 11 kW directly in the pipes, provided the pipes can support the pump. If not, install the pump on a mounting bracket or base plate.

Only install TP pumps with motors of 11 kW and up in horizontal pipes with the motor in vertical position. Always install the pump on an even and rigid foundation.

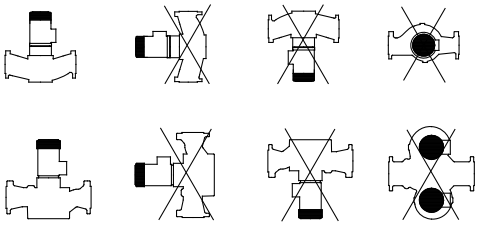

TM00 3735 0897

Fig. 132 Installation of motor sizes of 11 kW and up

Note: The motor must never point downwards.

Install the pumps in such a way that strain from the pipes is not transferred to the pump housing.

However, you can suspend some TP, TPE pumps of 11 kW and up directly in the pipes, either horizontally or vertically. See the table *TP, TPE pumps from 11 kW and up suspended in the pipes* on page 136.

TP, TPE pumps from 11 kW and up suspended in the pipes

Pump type	PN 16	PN 25	P2 [kW]								
50 Hz											
TP, TPE 65-460/2	-		11								-
TP, TPE 65-550/2	-		15								-
TP, TPE 65-660/2	-		18.5								-
TP, TPE 65-720/2	-		22								-
TP, TPE 80-330/2	-		11								-
TP, TPE 80-400/2	-		15								-
TP, TPE 80-520/2	-		18.5								-
TP, TPE 80-570/2	-		22								-
TP, TPE 100-250/2	-	-	11								-
TP, TPE 100-310/2	-	-	15								-
TP, TPE 100-360/2	-	-	18.5								-
TP, TPE 100-390/2	-	-	22								-
TP, TPE 80-340/4	-		11								-
TP, TPE 100-250/4	-	-	11								-
TP, TPE 100-330/4	-	-	15								-
TP, TPE 100-370/4	-	-	18.5								-
TP 100-410/4	-	-	22								-
TP, TPE 125-190/4	-	-	11								-
TP, TPE 125-230/4	-	-	15								-
TP, TPE 125-300/4	-	-	18.5								-
TP 125-340/4	-	-	22								-
TP, TPE 150-200/4	-	-	15								-
TP, TPE 150-220/4	-	-	18.5								-
TP 150-250/4	-	-	22								-
TP, TPE 150-260/4		-	18.5			-					-
TP 150-280/4		-	22			-					-
TP 150-340/4		-	30			-					-
TP 150-390/4		-	37			-					-
TP 150-450/4		-	45			-					-
TP 150-520/4		-	55			-					-
TP 150-660/4		-	75			-					-
TP, TPE 200-160/4		-	15			-					-
TP, TPE 200-190/4		-	18.5			-					-
TP 200-200/4		-	22			-					-
TP 200-240/4		-	30			-					-
TP 200-270/4		-	45			-					-
TP 200-320/4		-	55			-					-
TP 200-330/4		-	37			-					-
TP 200-360/4		-	45			-					-
TP 200-400/4		-	55			-					-
TP 200-410/4		-	75			-					-
TP 200-470/4		-	75			-					-
TP 300-190/4		-	30			-					-
TP 300-220/4		-	37			-					-
TP 300-250/4		-	45			-					-
TP 300-290/4		-	55			-					-
TP 300-390/4		-	75			-					-
TP 300-420/4		-	90			-					-
TP 300-430/4		-	110			-					-
TP 300-500/4		-	132			-					-
TP 300-550/4		-	160			-					-
TP 350-280/4		-	75			-					-
TP 350-320/4		-	90			-					-
TP 350-360/4		-	110			-					-
TP 350-420/4		-	132			-					-
TP 350-480/4		-	160			-					-
TP 350-530/4		-	100			-					-
TP 350-650/4		-	150			-					-
TP 350-780/4		-	116			-					-

In installations where the pump is suspended directly in the pipes, the pump can support the pipe length L on both sides of the pump. L is less than 3 x DN. See fig. 133. In installations where the pump is suspended directly in the pipes, the pump must be lifted and held in correct position by means of ropes or similar until both pump flanges are completely fastened to the pipe flanges.

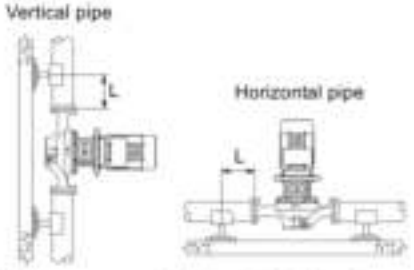

Fig. 133 Pump suspended directly in the pipes

When installing a twin-head pump in a horizontal pipe and with horizontal shaft, fit the upper pump housing with an automatic vent.

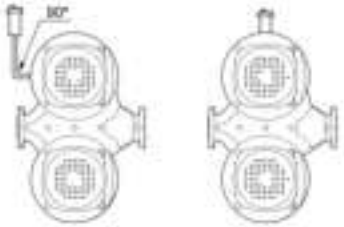

Fig. 134 Twin-head pumps with automatic vent

Twin-head pump housings have two Rp 1/4 tappings, TP Series 200, TPE2 D, TPE3 D, or four Rp 1/8 tappings, TP Series 300 for mounting of automatic vents.

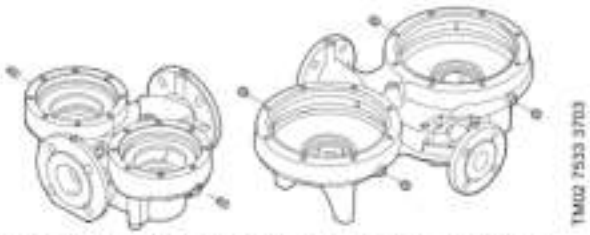

Fig. 135 Tappings for mounting of automatic vents in TP Series 200, TPE2 D, TPE3 D and TP Series 300

For further information about identification of TP Series 200 and TP Series 300 models, see pages 29 to 31.

If the liquid temperature falls below the ambient temperature or if the pump is installed outside, condensation may form in the motor during inactivity. In this case, the drain hole in the motor flange must be open and point downwards. See fig. 136.

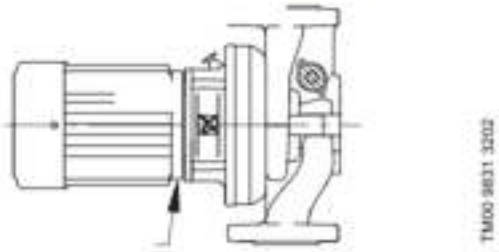

Fig. 136 Drain hole

If twin-head pumps are used for pumping liquids with a temperature below 0 °C / 32 °F, condensed water may freeze and cause the coupling to get stuck. You can remedy the problem by installing heating elements. Whenever possible, install pumps with motors smaller than 11 kW with horizontal motor shaft. See fig. 134.

Cooling

To ensure sufficient cooling of motor and electronics, observe the following:

- Place the pump in such a way that sufficient cooling is ensured.
- Keep the motor cooling fins, holes in fan cover and fan blades clean.
- Make sure that the frequency for the motor is at least 6 Hz, 12 % of maximum speed. The shaft seal may generate noise at speeds below 25 % of maximum speed.

Condensation cover

When installing the pumps outdoors, provide the motor with a suitable cover to protect the pump and motor against the direct effects of the elements. The drain holes in the motor must also be opened to avoid condensation in the motor and terminal box.

When mounting the condensation cover on top of the motor, make sure to leave enough space for the air to cool the motor.

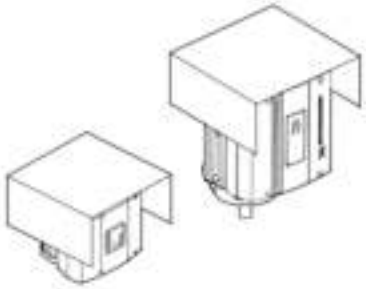

TM02 8514 0304

Fig. 137 Motors with condensation cover

Elimination of noise and vibrations

In order to achieve optimum operation and minimum noise and vibration, consider vibration dampening of the pump. Generally, always consider this for pumps with motors of 11 kW and up, but for motors of 90 kW and up as well as the pump stated in the table below, vibration dampening is mandatory. Smaller motor sizes, however, may also cause undesirable noise and vibration.

Pump type	Frequency [Hz]
TP 200-290/4	50 Hz

Noise and vibration are generated by the revolutions of the motor and pump and by the flow in pipes and fittings. The effect on the environment is subjective and depends on correct installation and the state of the remaining system.

Elimination of noise and vibrations is best achieved by means of a concrete foundation, vibration dampers and expansion joints.

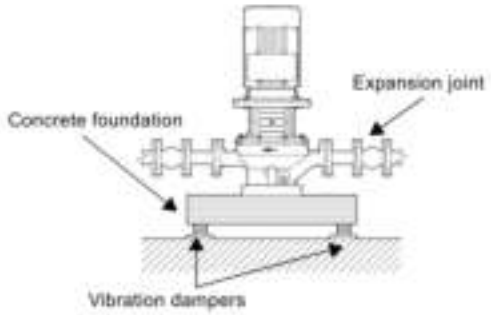

TM02 4993 2102

Fig. 138 Foundation of TP pump

Concrete foundation

Install the pump on a plane and rigid concrete foundation. This is the optimum solution for vibration dampening. As a rule of thumb, the weight of a concrete foundation must be 1.5 times the pump weight.

Recommended concrete foundations for TP, TPD Series 300 pumps

For TP Series 300 pumps with weights of 150 kg or more, we recommend that you mount the pump on a concrete foundation with the dimensions stated in the table below. The same recommendation applies for TPD Series 300 pumps with weights of 300 kg or more.

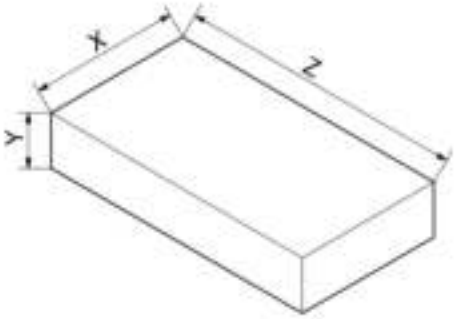

Fig. 139 Foundation for TP, TPD Series 300 pumps

Concrete foundation dimensions

Pump mass [kg]		Y (height) [mm]	Z (length) [mm]	X (width) [mm]
150	≤ DN 200	280	565	565
200		310	620	620
250		330	670	670
300		360	710	710
350		375	750	750
400		390	780	780
450		410	810	810
500		420	840	840
550		440	870	870
600		450	900	900
650		460	920	920
700		470	940	940
750		480	970	970
800		490	990	990
850		500	1010	1010
900		510	1030	1030
950		520	1050	1050
1000		530	1060	1060
1050		540	1080	1080
1100		550	1100	1100
1150		560	1100	1100
1200		560	1130	1130
1250		570	1150	1150
1300		580	1160	1160
1350		590	1180	1180
1400		600	1190	1190
1450		600	1200	1200
1500		610	1220	1220
1550		620	1230	1230
1600		620	1250	1250
1650		630	1250	1250
1700		635	1270	1270

Concrete foundation dimensions

Pump mass [kg]		Y (height) [mm]	Z (length) [mm]	X (width) [mm]
800	DN 300 / DN 350 / DN 400	450	1400	800
1000		450	1400	1000
1200		450	1400	1200
1400		500	1600	1200
1600		500	1600	1350
1800		500	1600	1500
2000		550	1600	1600
2200		550	1700	1700
2400		550	1800	1800
2600		600	1800	1800
3000		600	2000	2000
3400		680	2000	2000
3800		760	2000	2000
4200		840	2000	2000
4600		920	2000	2000
5000		1000	2000	2000
5400		1080	2000	2000

Vibration dampers

To prevent the transmission of vibrations to buildings, we recommend that you isolate the pump foundation from building parts by means of vibration dampers.

The selection of the right vibration damper requires the following data:

- Forces transmitted through the damper.
- Motor speed considering speed control, if any.
- Required dampening in %. The suggested value is 70 %.

The right damper varies from installation to installation, and a wrong damper may increase the vibration level. Vibration dampers must therefore be sized by the supplier.

If you install the pump on a foundation with vibration dampers, always fit expansion joints on the pump flanges. This is important to prevent the pump from "hanging" in the flanges.

Expansion joints

Expansion joints do the following:

- absorb expansions or contractions in the pipes caused by changing liquid temperature.
- reduce mechanical strains in connection with pressure surges in the pipes.
- isolate mechanical structure-borne noise in the pipes. Only rubber bellows expansion joints.

Note: Do not install expansion joints to compensate for inaccuracies in the pipes such as centre displacement of flanges.

Fit expansion joints at a distance of minimum 1 to 1.5 times the nominal flange diameter away from the pump on the inlet as well as on the outlet side. This prevents the development of turbulence in the expansion joints, resulting in better suction conditions and a minimum pressure loss on the outlet side. At high water velocities, greater than 5 m/s, we recommend that you install larger expansion joints corresponding to the pipes. See fig. 140.

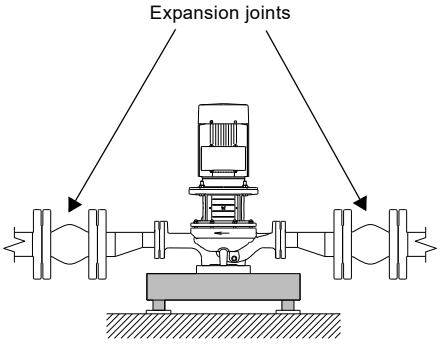

TM04 9629 4810

Fig. 140TP pump installed with larger expansion joints

The illustration below shows examples of rubber bellows expansion joints with or without limit rods.

TM02 4979 1902 - TM02 4981 1902

Fig. 141 Examples of rubber bellows expansion joints

You can use expansion joints with limit rods to reduce the effects of the expansion or contraction forces on the pipes. We always recommend expansion joints with limit rods for flanges larger than DN 100.

Anchor the pipes in such a way that they do not stress the expansion joints and the pump. Follow the supplier's instructions and pass them on to advisers or pipe installers.

The illustration below shows an example of a metal bellows expansion joint with limit rods.

TM02 4980 1902

Fig. 142 Example of metal expansion joint

Due to the risk of rupture of the rubber bellows, metal bellows expansion joints may be preferred at temperatures above 100 °C combined with high pressure.

Terminal box positions

TP single-head pumps

As standard, the terminal boxes of TP and TPE, TPE2, TPE3 pumps are mounted in 9 o'clock position.

The possible terminal box positions are shown below.

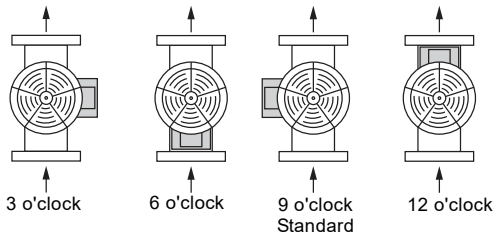

TM03 0565 2005

Fig. 143 Possible terminal box positions

TPE pumps with Siemens motors with integrated CUE can deviate up to 30 degrees from the 9 o'clock position.

Note: Due to the motor construction, the terminal boxes of some TP pumps with motor sizes above 250 kW are mounted in 10:30 position.

TPD twin-head pumps

As standard, the terminal boxes of all TPD and most TPED pumps are mounted in 12 o'clock position. See fig. 143.

On TPE2 D, TPE3 D pumps, the terminal box is installed in a position different from 12 o'clock.

The TPED pumps with terminal boxes installed in other positions are listed in the table. See example in fig. 144.

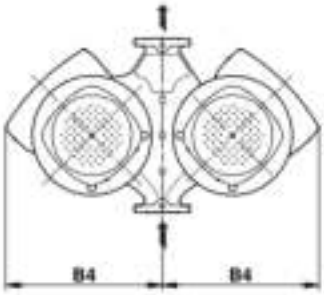

Fig. 144 Terminal box positions of TPED pumps

Note: You can find the B4 dimension in the tables of technical data of the individual pump. See *26. Performance curves and technical data* on page 168.

TPED pumps with terminal boxes installed in positions different from 12 o'clock

Three-phase TPED pump	P2 [kW]
TPED 32-230/2	0.75
TPED 32-200/2	1.1
TPED 32-250/2	1.5
TPED 32-320/2	2.2
TPED 32-380/2	3.0
TPED 32-460/2	4.0
TPED 32-580/2	5.5
TPED 40-270/2	1.5
TPED 40-300/2	3.0
TPED 40-360/2	4.0
TPED 40-430/2	5.5
TPED 40-530/2	7.5
TPED 40-630/2	11
TPED 50-290/2	3.0
TPED 50-360/2	4.0
TPED 50-430/2	5.5
TPED 50-420/2	7.5
TPED 50-540/2	11
TPED 50-630/2	15
TPED 50-710/2	15
TPED 50-830/2	18.5
TPED 50-900/2	22
TPED 65-210/2	3.0
TPED 65-250/2	4.0
TPED 65-340/2	5.5
TPED 65-410/2	7.5
TPED 65-460/2	11
TPED 65-550/2	15
TPED 65-660/2	18.5
TPED 65-720/2	22
TPED 80-180/2	3.0
TPED 80-210/2	4.0
TPED 80-240/2	5.5
TPED 80-250/2	7.5
TPED 80-330/2	11
TPED 80-400/2	15
TPED 80-520/2	18.5
TPED 80-570/2	22
TPED 100-120/2	2.2
TPED 100-160/2	4.0
TPED 100-200/2	5.5
TPED 100-240/2	7.5
TPED 100-250/2	11
TPED 65-240/4	4.0
TPED 80-150/4	3.0
TPED 80-170/4	4.0
TPED 80-240/4	5.5
TPED 80-270/4	7.5
TPED 100-60/4	1.1
TPED 100-70/4	1.5
TPED 100-90/4	2.2
TPED 100-110/4	3.0
TPED 100-130/4	4.0
TPED 100-170/4	5.5
TPED 100-200/4	7.5
TPED 125-110/4	4.0
TPED 125-130/4	5.5
TPED 125-160/4	7.5
TPED 150-130/4	7.5

Electrical installation

Mains-operated motors

The operating voltage and frequency are marked on the pump nameplate. Make sure that the motor is suitable for the power supply on which it will be used.

Single-phase standard motors incorporate a thermal switch and require no additional motor protection.

Three-phase motors must be connected to a motor starter.

Motors of 3 kW and up incorporate thermistors, PTC. The thermistors are designed according to DIN 44082.

The electrical connection must be carried out as shown in the diagram inside the terminal box cover.

The motors of twin-head pumps are to be connected separately.

Frequency converter operation

Motors types Siemens, MG 71 and MG 80 for supply voltages up to and including 440 V must be protected against voltage peaks higher than 650 V between the supply terminals. See the motor nameplate.

Grundfos motors:

You can connect all three-phase Grundfos motors from frame size 90 and up to a frequency converter.

The connection of a frequency converter often has the effect that the motor insulation system is loaded more and that the motor is more noisy than during normal operation. In addition, large motors are loaded by bearing currents caused by the frequency converter.

In the case of frequency converter operation, consider the following:

In 2-pole motors from 45 kW, 4-pole motors from 37 kW and 6-pole motors from 30 kW, one of the motor bearings must be electrically isolated to prevent damaging currents from passing through the motor bearings.

In the case of noise-critical applications, reduce the motor noise by fitting a dU/dt filter between the motor and the frequency converter. In particularly noise-critical applications, we recommend that you fit a sinusoidal filter.

The length of the cable between the motor and frequency converter affects the motor load. Therefore, check that the cable length meets the specifications laid down by the frequency converter supplier.

For supply voltages between 500 and 690 V, fit either a dU/dt filter to reduce voltage peaks or use a motor with reinforced insulation.

For supply voltages of 690 V, use a motor with reinforced insulation, and fit a dU/dt filter.

For other motor makes than Grundfos, contact Grundfos or the motor manufacturer.

21. Motors with built-in frequency converters

Motors for TPE, TPE2 and TPE3 pumps fitted with 2-pole motors from 0.12 - 11 kW and 4-pole motors from 0.12 - 7.5 kW

Single-phase supply voltage

1 x 200-240 V - 10 %/+ 10 %, 50/60 Hz, PE.

Recommended fuse size

Motor size [kW]	Min. [A]	Max. [A]
0.12 - 0.75	6	10
1.1 - 1.5	10	16

You can use standard as well as quick-blow or slow-blow fuses.

Leakage current

Earth leakage current less than 3.5 mA, AC.

Earth leakage current less than 10 mA, DC.

The leakage currents are measured in accordance with EN 61800-5-1:2007.

Three-phase supply voltage

3 x 380-500 V - 10 %/+ 10 %, 50/60 Hz, PE.

Recommended fuse size

Motor size [kW]	Min. [A]	Max. [A]
0.12 - 1.1	-	6
1.5	-	10
2.2	-	16
3	10	16
4	13	16
5.5	16	32
7.5	20	32
11	32	32

You can use standard as well as quick-blow or slow-blow fuses.

Leakage current, AC

Speed [min^{-1}]	Power [kW]	Mains voltage [V]	Leakage current [mA]
1400-2000 1450-2200	0.12 - 1.5	≤ 400	< 3.5
		> 400	< 5
	2.2 - 4	≤ 400	< 3.5
		> 400	< 3.5
	5.5 - 7.5	≤ 400	< 3.5
		> 400	< 5
2900-4000	0.25 - 2.2	≤ 400	< 3.5
		> 400	< 5
	3 - 5.5	≤ 400	< 3.5
		> 400	< 3.5
	7.5 - 11	≤ 400	< 3.5
		> 400	< 5
4000-5900	0.25 - 2.2	≤ 400	< 3.5
		> 400	< 5
	3 - 5.5	≤ 400	< 3.5
		> 400	< 3.5
	7.5 - 11	≤ 400	< 3.5
		> 400	< 5

The leakage currents are measured without any load on the shaft and in accordance with EN 61800-5-1:2007.

Inputs and outputs

Earth reference, GND

All voltages refer to GND.

All currents return to GND.

Absolute maximum voltage and current limits

Exceeding the following electrical limits may result in severely reduced operating reliability and motor life:

Relay 1:

Maximum contact load: 250 VAC, 2 A or 30 VDC, 2 A.

Relay 2:

Maximum contact load: 30 VDC, 2 A.

GENI terminals: -5.5 to 9.0 VDC or less than 25 mADC.

Other input or output terminals: -0.5 to 26 VDC or less than 15 mADC.

Digital inputs, DI

Internal pull-up current greater than 10 mA at V_i equal to 0 VDC.

Internal pull-up to 5 VDC (currentless for V_i greater than 5 VDC).

Low logic level: V_i less than 1.5 VDC.

High logic level: V_i greater than 3.0 VDC.

Hysteresis: No.

Screened cable: 0.5 - 1.5 mm^2, 28-16 AWG.

Maximum cable length: 500 m.

Open-collector digital outputs, OC

Current sinking capability: 75 mADC, no current sourcing.

Load types: Resistive or/and inductive.

Low-state output voltage at 75 mADC: Maximum 1.2 VDC.

Low-state output voltage at 10 mADC: Maximum 0.6 VDC.

Overcurrent protection: Yes.

Screened cable: 0.5 - 1.5 mm^2, 28-16 AWG.

Maximum cable length: 500 m.

Analog inputs, AI

Voltage signal ranges:

- 0.5 - 3.5 VDC, AL AU.
- 0-5 VDC, AU.
- 0-10 VDC, AU.

Voltage signal: R_i greater than 100 kΩ at 25 °C.

Leak currents may occur at high operating temperatures. Keep the source impedance low.

Current signal ranges:

- 0-20 mADC, AU.
- 4-20 mADC, AL AU.

Current signal: R_i equal to 292 Ω.

Current overload protection: Yes. Change to voltage signal.

Measurement tolerance: - 0/+ 3 % of full scale (maximum-point coverage).

Screened cable: 0.5 - 1.5 mm^2, 28-16 AWG.

Maximum cable length: 500 m (excl. potentiometer).

Potentiometer connected to +5 V, GND, any AI:

Use maximum 10 kΩ.

Maximum cable length: 100 m.

Analog output, AO

Current sourcing capability only.

Voltage signal:

- Range: 0-10 VDC.
- Minimum load between AO and GND: 1 kΩ.
- Short-circuit protection: Yes.

Current signal:

- Ranges: 0-20 and 4-20 mADC.
- Maximum load between AO and GND: 500 Ω.
- Open-circuit protection: Yes.

Tolerance: - 0/+ 4 % of full scale (maximum-point coverage).

Screened cable: 0.5 - 1.5 mm^2, 28-16 AWG.

Maximum cable length: 500 m.

Pt100/1000 inputs, PT

Temperature range:

- Minimum -30 °C. 88 Ω / 882 Ω.
- Maximum 180 °C. 168 Ω / 1685 Ω.

Measurement tolerance: ± 1.5 °C.

Measurement resolution: < 0.3 °C.

Automatic range detection, Pt100 or Pt1000: Yes.

Sensor fault alarm: Yes.

Screened cable: 0.5 - 1.5 mm^2, 28-16 AWG.

Use Pt100 for short wires.

Use Pt1000 for long wires.

LiqTec sensor inputs*

Use Grundfos LiqTec sensor only.

Screened cable: 0.5 - 1.5 mm^2, 28-16 AWG.

Grundfos Digital Sensor input and output, GDS*

Use Grundfos Digital Sensor only.

* Only applicable for TPE, TPED Series 2000 and TPE3, TPE3 D pumps.

Power supplies

+5 V:

- Output voltage: 5 VDC - 5 %/+ 5 %.
- Maximum current: 50 mADC, sourcing only.
- Overload protection: Yes.

+24 V:

- Output voltage: 24 VDC - 5 %/+ 5 %.
- Maximum current: 60 mADC, sourcing only.
- Overload protection: Yes.

Digital outputs, relays

Potential-free changeover contacts.

Minimum contact load when in use: 5 VDC, 10 mA.

Screened cable: 0.5 - 2.5 mm^2, 28-12 AWG.

Maximum cable length: 500 m.

Bus input

Grundfos GENIbus protocol, RS-485.

Screened 3-core cable: 0.5 - 1.5 mm^2, 28-16 AWG.

Maximum cable length: 500 m.

EMC, electromagnetic compatibility

Standard used: EN 61800-3.

The table below shows the emission category of the motor.

C1 fulfils the requirements for residential areas.

Note: When connected to a public network, 11 kW motors do not comply with the partial weighted harmonic distortion (PWHD) requirements of EN 61000-3-12. If required by the distribution network operator, compliance can be obtained in the following way:

The impedance of the mains cables between the motor and the point of common coupling (PCC) must be equivalent to the impedance of a 50 m cable with a cross-section of 0.5 mm.

C3 fulfils the requirements for industrial areas.

Note: When the motors are installed in residential areas, supplementary measures may be required as the motors may cause radio interference.

Motor [kW]	Emission category	
	1450-2000 min^{-1}	2900-4000 min^{-1} 4000-5900 min^{-1}
0.12	C1	C1
0.25	C1	C1
0.37	C1	C1
0.55	C1	C1
0.75	C1	C1
1.1	C1	C1
1.5	C1	C1
2.2	C1	C1
3	C1	C1
4	C1	C1
5.5	C3/C1*	C1
7.5	C3/C1*	C3/C1*
11		C3/C1*

* C1, if equipped with an external Grundfos EMC filter.

Immunity: The motor fulfils the requirements for industrial areas.

Contact Grundfos for further information.

Enclosure class

Standard: IP55 (IEC 34-5).

Optional: IP66 (IEC 34-5).

Insulation class

F (IEC 85).

Ambient temperature

During operation: -20 to 50 °C.

During storage and transportation: -30 to 60 °C.

Standby power consumption

5-10 W.

Cable entries

Motor [kW]	Number and size of cable entries		
	TPE, TPED Series 1000 and 2000		TPE2, TPE2 D, TPE3, TPE3 D
	1400-2000 min^{-1} 1450-2200 min^{-1}	2900-4000 min^{-1}	
0.12 - 1.5	4 x M20	4 x M20	4 x M20
2.2	1 x M25 + 4 x M20	4 x M20	
3.0 - 4.0	1 x M25 + 4 x M20	1 x M25 + 4 x M20	
5.5	1 x M32 + 5 x M20	1 x M25 + 4 x M20	
7.5 - 11	1 x M32 + 5 x M20	1 x M32 + 5 x M20	

Sound pressure level

TPE, TPED Series 1000 and 2000

Motor [kW]	Maximum speed stated on nameplate [min^{-1}]	Speed [min^{-1}]	Sound pressure level ISO 3743 [dB(A)]	
			1-phase motors	3-phase motors
0.12 - 0.75	2000	1500	37	37
		2000	43	43
	4000	3000	50	50
		4000	60	60
1.1	2000	1500		37
		2000		43
	4000	3000	50	50
		4000	60	60
1.5	2000	1500		42
		2000		47
	4000	3000	57	57
		4000	64	64
2.2	2000	1500		48
		2000		55
	4000	3000		57
		4000		64
3	2000	1500		48
		2000		55
	4000	3000		60
		4000		69
4	2000	1500		48
		2000		55
	4000	3000		61
		4000		69
5.5	2000	1500		58
		2000		61
	4000	3000		61
		4000		69
7.5	2000	1500		58
		2000		61
	4000	3000		66
		4000		73
11	4000	3000		66
		4000		73

The grey fields indicate that the motor is not available in this MGE motor range.

TPE2, TPE2 D, TPE3, TPE3 D

Pump size	Sound pressure level ISO 3743 [dB(A)]
TPE2/TPE3 32-80	55
TPE2/TPE3 32-120	60
TPE2/TPE3 32-150	65
TPE2/TPE3 32-180	66
TPE2/TPE3 32-200	66
TPE2/TPE3 40-80	52
TPE2/TPE3 40-120	59
TPE2/TPE3 40-150	60
TPE2/TPE3 40-180	63
TPE2/TPE3 40-200	65
TPE2/TPE3 40-240	66
TPE2/TPE3 50-60	48
TPE2/TPE3 50-80	56
TPE2/TPE3 50-120	60
TPE2/TPE3 50-150	60
TPE2/TPE3 50-180	63
TPE2/TPE3 50-200	64
TPE2/TPE3 50-240	66
TPE2/TPE3 65-60	44
TPE2/TPE3 65-80	51
TPE2/TPE3 65-120	59
TPE2/TPE3 65-150	62
TPE2/TPE3 65-180	62
TPE2/TPE3 65-200	62
TPE2/TPE3 80-40	43
TPE2/TPE3 80-120	53
TPE2/TPE3 80-150	62
TPE2/TPE3 80-180	64
TPE2/TPE3 100-40	43
TPE2/TPE3 100-120	53
TPE2/TPE3 100-150	62
TPE2/TPE3 100-180	64

Motor protection

The motor requires no external motor protection. The motor incorporates thermal protection against slow overloading and blocking.

Additional protection

The residual-current circuit breaker must be marked with the following symbol:

The total leakage current of all the electrical equipment in the installation must be taken into account. You find the leakage current of the motor in *Leakage current* and *Leakage current, AC*, see page 143.

This product can cause a direct current in the protective-earth conductor.

Overvoltage and undervoltage protection

Overvoltage and undervoltage may occur in case of unstable power supply or a faulty installation. The motor is stopped if the voltage falls outside the permissible voltage range. The motor restarts automatically when the voltage is again within the permissible voltage range. Therefore, no additional protection relay is required.

Note: The motor is protected against transients from the power supply according to EN 61800-3. In areas with high lightning intensity, we recommend external lightning protection.

Overload protection

If the upper load limit is exceeded, the motor automatically compensates for this by reducing the speed and stops if the overload condition persists.

The motor remains stopped for a set period. After this period, the motor automatically attempts to restart. The overload protection prevents damage to the motor. Consequently, no additional motor protection is required.

Overtemperature protection

The electronic unit has a built-in temperature sensor as an additional protection. When the temperature rises above a certain level, the motor automatically compensates for this by reducing the speed and stops if the temperature keeps rising. The motor remains stopped for a set period. After this period, the motor automatically attempts to restart.

Protection against phase unbalance

Three-phase motors must be connected to a power supply with a quality corresponding to IEC 60146-1-1, class C, to ensure correct motor operation at phase unbalance. This also ensures long life of the components.

Maximum number of starts and stops

The number of starts and stops via the power supply must not exceed four times per hour.

When switched on via the power supply, the pump starts after approximately 5 seconds.

If you want a higher number of starts and stops, use the input for external start-stop when starting or stopping the pump.

When you start a pump via an external on/off switch, the pump starts immediately.

Wiring diagrams

Single-phase supply:

Fig. 145 Example of a mains-connected motor with main switch, backup fuse and additional protection

Three-phase supply:

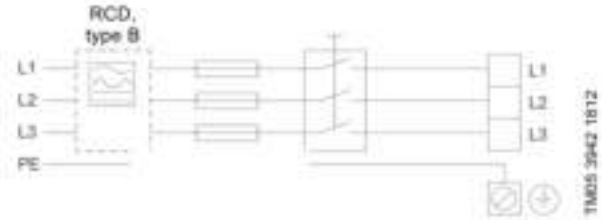

Fig. 146 Example of a mains-connected motor with main switch, backup fuse and additional protection

Connection terminals

The descriptions and terminal overviews in this section apply to both single-phase and three-phase motors.

Connection terminals, advanced functional module, FM 300

The advanced module has these connections:

- three analog inputs
- one analog output
- two dedicated digital inputs
- two configurable digital inputs or open-collector outputs
- Input and output for Grundfos Digital Sensor
  Not applicable for TPE, TPED Series 1000 and TPE2, TPE2 D pumps.
  The factory-fitted differential-pressure sensor for TPE, TPED Series 2000 and TPE3, TPE3 D pumps is connected to this input.
- two Pt100/1000 inputs
- two LiqTec sensor inputs
- two signal relay outputs
- GENIbus connection.

See fig. 147.

Note: Digital input 1 is factory-set to be start-stop input where open circuit results in stop. A jumper has been factory-fitted between terminals 2 and 6. Remove the jumper if digital input 1 is to be used as external start-stop or any other external function.

- **Inputs and outputs**
  All inputs and outputs are internally separated from the mains-conducting parts by reinforced insulation and galvanically separated from other circuits.
  All control terminals are supplied by protective extra-low voltage, PELV, thus ensuring protection against electric shock.
- **Signal relay outputs**
  – Signal relay 1:
    LIVE:
    You can connect supply voltages up to 250 VAC.
    PELV:
    The output is galvanically separated from other circuits. Therefore, you can connect the supply voltage or protective extra-low voltage to the output as desired.
  – Signal relay 2:
    PELV:
    The output is galvanically separated from other circuits. Therefore, you can connect the supply voltage or protective extra-low voltage to the output as desired.
- **Mains supply,** terminals N, PE, L or L1, L2, L3, PE.

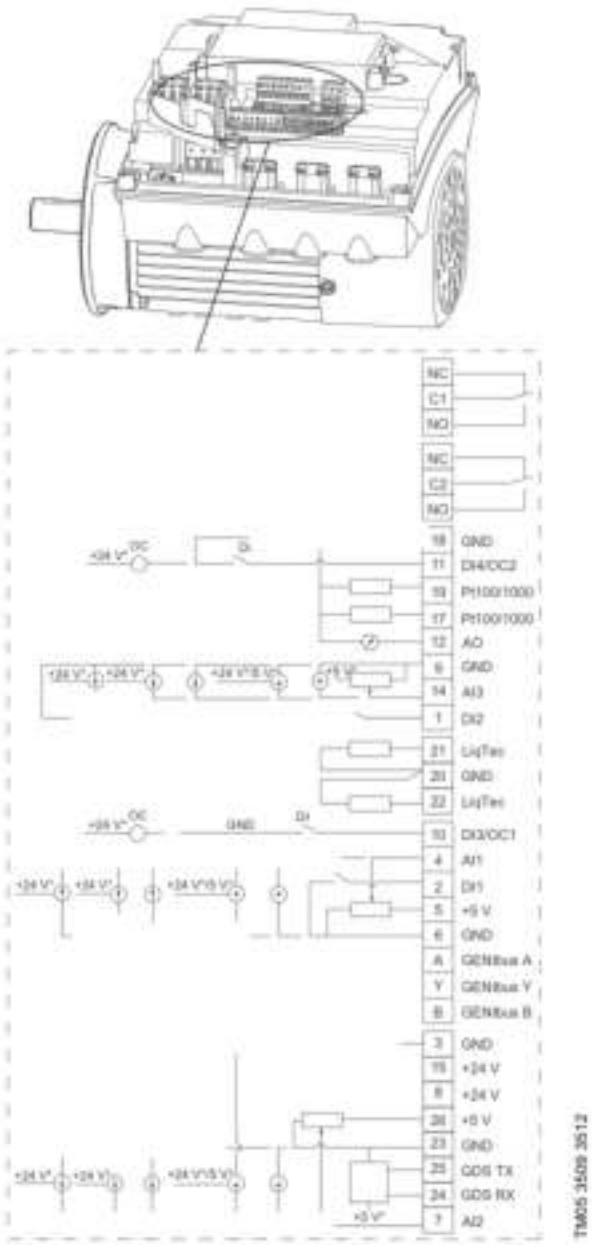

* If ar e is used, there must be a connection to GND.

Fig. 147 Connection terminals, FM 300, option

Terminal	Type	Function
NC	Normally closed contact	Signal relay 1 LIVE or PELV
C1	Common	
NO	Normally open contact	
NC	Normally closed contact	Signal relay 2 PELV only
C2	Common	
NO	Normally open contact	
18	GND	Earth
11	DI4/OC2	Digital input/output, configurable. Open collector: Maximum 24 V resistive or inductive.
19	Pt100/1000 input 2	Pt100/1000 sensor input
17	Pt100/1000 input 1	Pt100/1000 sensor input
12	AO	Analog output: 0-20 mA / 4-20 mA 0-10 V
9	GND	Earth
14	AI3	Analog input: 0-20 mA / 4-20 mA 0-10 V
1	DI2	Digital input, configurable
21	LiqTec sensor input 1	LiqTec sensor input White conductor
20	GND	Earth Brown
22	LiqTec sensor input 2	LiqTec sensor input Blue conductor
10	DI3/OC1	Digital input/output, configurable. Open collector: Max. 24 V resistive or inductive.
4	AI1	Analog input: 0-20 mA / 4-20 mA 0.5 - 3.5 V / 0-5 V / 0-10 V
2	DI1	Digital input, configurable
5	+5 V	Supply to potentiometer and sensor
6	GND	Earth
A	GENIbus, A	GENIbus, A (+)
Y	GENIbus, Y	GENIbus, GND
B	GENIbus, B	GENIbus, B (-)
3	GND	Earth
15	+24 V	Supply
8	+24 V	Supply
26	+5 V	Supply to potentiometer and sensor
23	GND	Earth
25	GDS TX	Grundfos Digital Sensor output
24	GDS RX	Grundfos Digital Sensor input
7	AI2	Analog input: 0-20 mA / 4-20 mA 0.5 - 3.5 V / 0-5 V / 0-10 V

MGE motors, 11 to 18.5 kW, 4-pole, and 15 to 22 kW, 2-pole

Grundfos MGE 100, MGE 112, MGE 132, MGE 160 and MGE 180 motors offer these features:

- Three-phase mains connection.
- Three-phase, asynchronous squirrel-cage induction motors designed to current IEC, DIN and VDE guidelines and standards. The motors incorporate a frequency converter and PI controller.
- Used for continuously variable speed control of Grundfos E-pumps available in power sizes 11 to 18.5 kW, 4-pole, and 15 to 22 kW, 2-pole.

Supply voltage

3 x 380-480 V - 10 %/+ 10 %, 50/60 Hz, PE.

Backup fuse

Motor size [kW]	Maximum fuse [A]
[illegible]	26
[illegible]	[illegible]
18.5	[illegible]
[illegible]	[illegible]

You can use standard as well as quick-blow or slow-blow fuses.

Leakage current

Motor size [kW]	Leakage current [mA]
[illegible] 2	[illegible]

The leakage currents are measured in accordance with EN 61800-5-1.

Input and output

Start-stop

- External potential-free switch.
  Voltage: 5 VDC.
  Current: Less than 5 mA.
  Screened cable: 0.5 - 1.5 mm^2, 28-16 AWG.

Digital input

- External potential-free switch.
  Voltage: 5 VDC.
  Current: Less than 5 mA.
  Screened cable: 0.5 - 1.5 mm^2, 28-16 AWG.

Setpoint signals

- Potentiometer
  0-10 VDC, 10 kΩ via internal voltage supply.
  Screened cable: 0.5 - 1.5 mm^2, 28-16 AWG.
  Maximum cable length: 100 m.
- Voltage signal
  0-10 VDC, R_i greater than 50 kΩ.
  Tolerance: + 0/- 3 % at maximum voltage signal.
  Screened cable: 0.5 - 1.5 mm^2, 28-16 AWG.
  Maximum cable length: 500 m.
- Current signal
  DC 0-20 mA / 4-20 mA, R_i equal to 175 Ω.
  Tolerance: + 0/- 3 % at maximum current signal.
  Screened cable: 0.5 - 1.5 mm^2, 28-16 AWG.
  Maximum cable length: 500 m.

Sensor signals

- Voltage signal
  0-10 VDC, R_i greater than 50 kΩ via internal voltage supply.
  Tolerance: + 0/- 3 % at maximum voltage signal.
  Screened cable: 0.5 - 1.5 mm^2, 28-16 AWG.
  Maximum cable length: 500 m.
- Current signal
  DC 0-20 mA / 4-20 mA, R_i equal to 175 Ω.
  Tolerance: + 0/- 3 % at maximum current signal.
  Screened cable: 0.5 - 1.5 mm^2, 28-16 AWG.
  Maximum cable length: 500 m.
- Power supply to sensor
  +24 VDC, maximum 40 mA.

Signal output

- Potential-free changeover contact.
  Maximum contact load: 250 VAC, 2 A.
  Minimum contact load: 5 VDC, 10 mA.
  Screened cable: 0.5 - 1.5 mm^2, 28-16 AWG.
  Maximum cable length: 500 m.

Bus input

- Grundfos GENIbus protocol, RS-485.
  Screened cable: 0.5 - 1.5 mm^2, 28-16 AWG.
  Maximum cable length: 500 m.

EMC, electromagnetic compatibility to EN 61800-3

Motor [kW]	Emission/immunity
11 15 18.5 22	**Emission:** The motors are category C3, corresponding to CISPR11, group 2, class A, and may be installed in industrial areas (second environment). If fitted with an external Grundfos EMC filter, the motors are category C2, corresponding to CISPR11, group 1, class A, and may be installed in residential areas (first environment). **Note:** When the motors are installed in residential areas, supplementary measures may be required as the motors may cause radio interference. **Immunity:** The motors fulfil the requirements for both the first and second environment.

For further information about EMC, see *Electromagnetic compatibility, EMC*, page 163.

Enclosure class

Standard: IP55 (IEC34-5).

Insulation class

F (IEC 85).

Ambient temperature

During operation: -20 to +40 °C.

During storage/transport: -25 to +70 °C.

Relative humidity

Maximum 95 %.

Sound pressure level

Motor [kW]	Speed stated on the nameplate [min^{-1}]	Sound pressure level [dB(A)]
11	1400-1500	54
	1700-1800	59
15	1400-1500	54
	1700-1800	59
	2800-3000	65
	3400-3600	70
18.5	1400-1500	65
	1700-1800	69
	2800-3000	69
	3400-3600	74
22	2800-3000	73
	3400-3600	78

Motor protection

The motor requires no external motor protection. The motor incorporates thermal protection against slow overloading and blocking.

Additional protection

The residual-current circuit breaker must be marked with the following symbol:

The total leakage current of all the electrical equipment in the installation must be taken into account. You find the leakage current of the motor in *Leakage current* and *Leakage current, AC*, see page 143.

This product can cause a direct current in the protective-earth conductor.

Overvoltage and undervoltage protection

Overvoltage and undervoltage may occur in case of unstable power supply or a faulty installation. The motor is stopped if the voltage falls outside the permissible voltage range. The motor restarts automatically when the voltage is again within the permissible voltage range. Therefore, no additional protection relay is required.

Note: The motor is protected against transients from the power supply according to EN 61800-3. In areas with high lightning intensity, we recommend external lightning protection.

Overload protection

If the upper load limit is exceeded, the motor automatically compensates for this by reducing the speed and stops if the overload condition persists.

The motor remains stopped for a set period. After this period, the motor automatically attempts to restart. The overload protection prevents damage to the motor. Consequently, no additional motor protection is required.

Overtemperature protection

The electronic unit has a built-in temperature sensor as an additional protection. When the temperature rises above a certain level, the motor automatically compensates for this by reducing the speed and stops if the temperature keeps rising. The motor remains stopped for a set period. After this period, the motor automatically attempts to restart.

Protection against phase unbalance

Three-phase motors must be connected to a power supply with a quality corresponding to IEC 60146-1-1, class C, to ensure correct motor operation at phase unbalance. This also ensures long life of the components.

Maximum number of starts and stops

The number of starts and stops via the power supply must not exceed four per hour.

When switched on via the power supply, the pump starts after approximately 5 seconds.

If you want a higher number of starts and stops, use the input for external start-stop when starting or stopping the pump.

When you start the pump via an external on/off switch, the pump starts immediately.

Wiring diagram, 11-22 kW

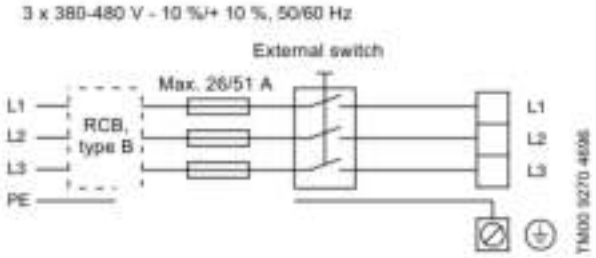

Fig. 148 Wiring diagram, three-phase MGE motors, 11-22 kW

Other connections

Note: As a precaution, make sure that the wires to be connected to the following connection groups are separated from each other by reinforced insulation in their entire lengths:

Group 1: Inputs

- Start or stop, terminals 2 and 3
- digital input, terminals 1 and 9
- setpoint input, terminals 4, 5 and 6
- sensor input, terminals 7 and 8
- GENIbus, terminals B, Y and A.

All inputs, group 1, are internally separated from the mains-conducting parts by reinforced insulation and galvanically separated from other circuits.

All control terminals are supplied by protective extra-low voltage, PELV, thus ensuring protection against electric shock.

- **Group 2:** Output (relay signal, terminals NC, C, NO). The output, group 2, is galvanically separated from other circuits. Therefore, you can connect the supply voltage or protective extra-low voltage to the output as desired.
- **Group 3:** Mains supply (terminals L1, L2, L3). A galvanically safe separation must fulfil the requirements for reinforced insulation including creepage distances and clearances specified in EN 61800-5-1.
- **Group 4:** Communication cable (8-pin male socket), only TPED
  The communication cable is connected to the socket in group 4. The cable ensures communication between the two pumps, whether one or two pressure sensors are connected.
  The selector switch in group 4 enables changeover between the operating modes "Alternating operation" and "Standby operation".

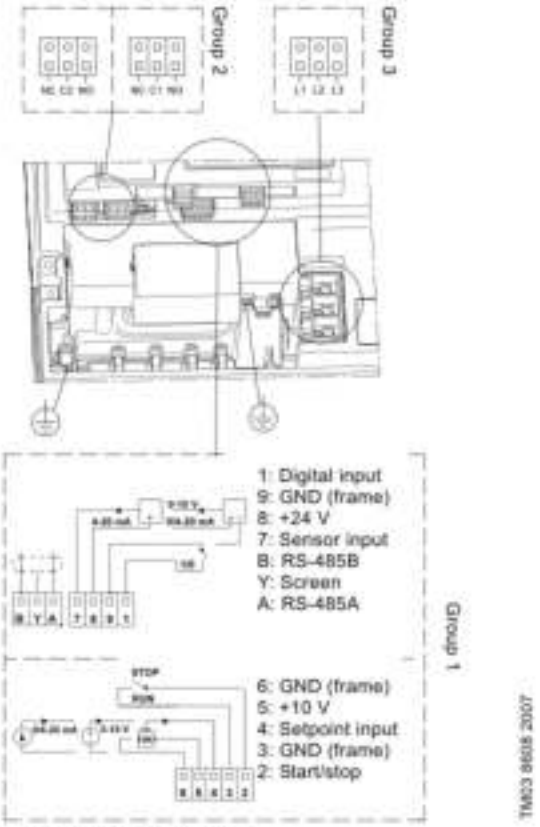

Fig. 149 Connection terminals

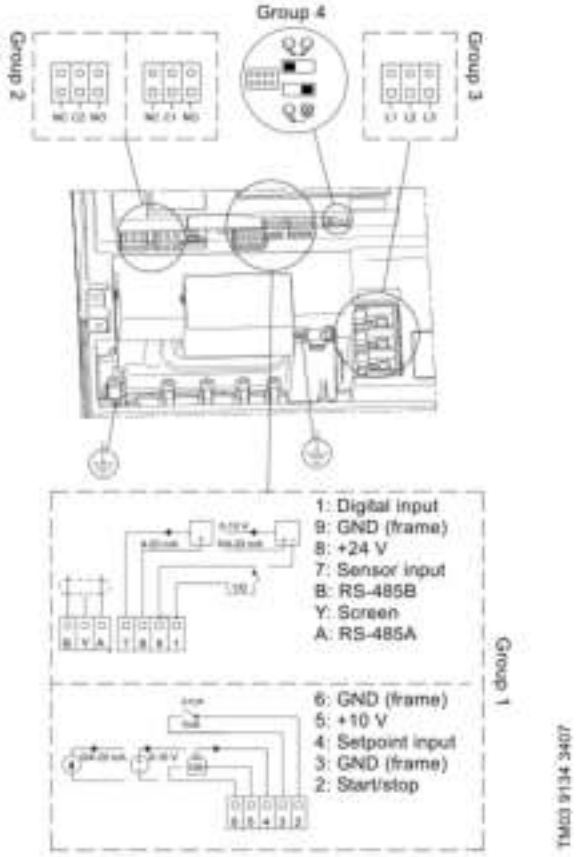

Fig. 150 Connection terminals, TPED Series 2000

Identification of functional module

You can identify the module in one of the following ways:

Grundfos GO

Select the "Fitted modules" menu under "Status".

Pump display

If the pump is fitted with the advanced control panel, select "Fitted modules" menu under "Status".

Motor nameplate

You can identify the fitted module on the motor nameplate. See fig. 151.

Fig. 151 Identification of functional module

Variant	Description
FM 200	Standard functional module
FM 300	Advanced functional module

22. Siemens motors with integrated CUE frequency converters 30-55 kW, 2-pole and 22-55 kW, 4-pole

TPE pumps 30-55 kW, 2-pole and 22-55 kW, 4-pole have Siemens motors with integrated CUE frequency converters. The frequency converter part of the TPE Series 2000 and TPE Series1000 will in the following descriptions be named as CUE.

Technical data

Enclosure

Typical shaft power P2 [kW]	[hp]	Enclosure (3 x 380-500 V, IP55)
22	30	B2
30	40	
37	50	
45	60	C1
55	75	

Operating conditions

Relative humidity	5-95 % RH
Ambient temperature	Max. 50 °C (122 °F)
Average ver 24 hours	Max. 45 °C (113 °F)
Minimum ambient temperature at full operation	0 °C (32 °F)
Minimum ambient temperature at reduced operation	-10 °C (14 °F)
Temperature during storage and transport	-25 to 65 °C (-13 to 149 °F)
Storage duration	Max. 6 months
Maximum altitude above sea level without performance reduction	1000 m (3280 ft)
Maximum altitude above sea level with performance reduction	3000 m (9840 ft)

TPE comes in a packaging which is not suitable for outdoor storage.

Mechanical data

Cable gland

Enclosure	holes
B2 IP21 / NEMA type 1 and B2 IP55 / NEMA type 12	1 x 21.5
	1 x 26.3
	1 x 33.1
	2 x 42.9

Cable requirements

Maximum length, screened motor cable	150 m (500 ft)
Maximum length, unscreened motor cable	300 m (1000 ft)
Maximum length, signal cable	300 m (1000 ft)

Always comply with local regulations as to cable cross-sections.

Cable cross-section to signal terminals

Maximum cable cross-section to signal terminals, rigid conductor	1.5 mm² (14 AWG)
Maximum cable cross-section to signal terminals, flexible conductor	1.0 mm² (18 AWG)
Minimum cable cross-section to signal terminals	0.5 mm² (20 AWG)

Non-UL fuses and conductor cross-section to mains and motor, for installations outside North America

Typical shaft power P2 [kW (hp)]	Maximum fuse size [A]	Fuse type	Maximum conductor cross-section[1] [mm²]
3 x 380-500 V			
22 (30)	63	aR	16
30 (40)	80	aR	16
37 (50)	100	aR	50
45 (60)	125	aR	50
55 (75)	160	aR	50

[1] Screened motor cable, unscreened supply cable. AWG. See section *Electrical data* on page 153.

Electrical data

Mains supply (L1, L2, L3)

Supply voltage	380-500 V ± 10 %
Supply frequency	50/60 Hz
Maximum temporary imbalance between phases	3 % of rated value
Leakage current to protective earth	> 3.5 mA
Number of cut-ins, enclosures B and C	Max. 1 time/min.

Do not use the power supply for switching CUE on and off.

RS-485 GENIbus connection

Terminal number	68 (A), 69 (B), 61 GND (Y)

The RS-485 circuit is functionally separated from other central circuits and galvanically separated from the supply voltage (PELV).

Digital inputs

Terminal number	18, 19, 32, 33
Voltage level	0-24 VDC
Voltage level, open contact	> 19 VDC
Voltage level, closed contact	< 14 VDC
Maximum voltage on input	28 VDC
Input resistance, R_i	Approx. 4 kΩ

All digital inputs are galvanically separated from the supply voltage (PELV) and other high-voltage terminals.

Signal relays

Relay 01, terminal number	1 (C), 2 (NO), 3 (NC)
Relay 02, terminal number	4 (C), 5 (NO), 6 (NC)
Maximum terminal load (AC-1)[1]	240 VAC, 2 A
Maximum terminal load (AC-15)[1]	240 VAC, 0.2 A
Maximum terminal load (DC-1)[1]	50 VDC, 1 A
Minimum terminal load	24 VDC 10 mA 24 VAC 20 mA

[1] IEC 60947, parts 4 and 5.

C Common

NO Normally open

NC Normally closed

The relay contacts are galvanically separated from other circuits by reinforced insulation (PELV).

Analog inputs

Analog input 1, terminal number	53
Voltage signal	A53 = "U"[1]
Voltage range	0-10 V
Input resistance, R_i	Approx. 10 kΩ
Maximum voltage	± 20 V
Current signal	A53 = "I"[1]
Current range	0-20, 4-20 mA
Input resistance, R_i	Approx. 200 Ω
Maximum current	30 mA
Maximum fault, terminals 53, 54	0.5 % of full scale
Analog input 2, terminal number	54
Current signal	A54 = "I"[1]
Current range	0-20, 4-20 mA
Input resistance, R_i	Approx. 200 Ω
Maximum current	30 mA
Maximum fault, terminals 53, 54	0.5 % of full scale

[1] The factory setting is voltage signal "U".

All analog inputs are galvanically separated from the supply voltage (PELV) and other high-voltage terminals.

Analog output

Analog output 1, terminal number	42
Current range	0-20 mA
Maximum load to frame	500 Ω
Maximum fault	0.8 % of full scale

The analog output is galvanically separated from the supply voltage (PELV) and other high-voltage terminals.

MCB 114 sensor input module

Analog input 3, terminal number	2
Current range	0/4-20 mA
Input resistance	~ 200 Ω
Analog inputs 4 and 5, terminal number	4, 5 and 7, 8
Signal type, 2- or 3-wire	Pt100/Pt1000

Miscellaneous data

STO application

The STO signal must be SELV or PELV supplied.

European directive	Machinery Directive (2006/42/EC)	EN ISO 13849-1
		EN IEC 62061
		EN IEC 61800-5-2
	EMC Directive (2004/108/EC)	EN 50011
		EN 61000-6-3
		EN 61800-3
	Low Voltage Directive (2006/95/EC)	EN 50178
		EN 61800-5-1
Safety standards	Safety of machinery	EN ISO 13849-1, IEC 62061, IEC 60204-1
	Functional safety	IEC 61508-1 to -7, IEC 61800-5-2
Safety function		IEC 61800-5-2 (Safe Torque Off, STO) IEC 60204-1 (Stop Category 0)
Safety performance	**IOS 13849-1**	
	Category	Cat 3
	Diagnostic Coverage	DC: 90 %, medium
	Mean Time to Dangerous Failure	MTTFd: 14000 years, high
	Performance Level	PL d
	IEC 61508 / IEC 62061	
	Safety Integrity Level	SIL 2, SIL CL2
	Probability of Dangerous Failure per Hour	PFH: 1E-10/h. High Demand Mode.
	Probability of Dangerous Failure on Demand	PFD: 1E-10. Low Demand Mode.
	Safe Failure Fraction	SFF: > 99 %
	Hardware Fault Tolerance	HFT: 0 (1oo1)
	Proof Test Interval T1	20 years
	Mission time TM	20 years
Reaction time	Input to output response time	Maximum 20 ms

Electrical connection

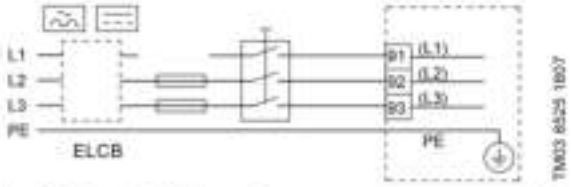

Fig. 152 Example of three-pha CUE with main switch, backup fuses and additional protection

Electrical protection

Protection against electric shock, indirect contact

The leakage current to protective earth exceeds 3.5 mA, and a reinforced earth connection is required.

Protective conductors must always have a yellow and green (PE) or yellow, green and blue (PEN) colour marking.

Instructions according to EN IEC 61800-5-1:

- CUE must be stationary, installed permanently and connected permanently to the mains supply.
- The protective earth connection must be carried out with duplicate protective conductors or with a single reinforced protective conductor with a cross-section of minimum 10 mm^2.

Protection against short circuit, fuses

CUE and the supply system must be protected against short circuit.

Grundfos requires that the backup fuses mentioned in section *Cable cross-section to signal terminals* on page 153 are used for protection against short circuit.

CUE offers complete short-circuit protection in case of a short circuit on the motor output.

Additional protection

If CUE is connected to an electrical installation where an earth leakage circuit breaker (ELCB/RCD) is used as additional protection, the circuit breaker must be of a type marked with the following symbols:

ELCB/RCD

The circuit breaker is type B.

The total leakage current of all the electrical equipment in the installation must be taken into account.

The leakage current of CUE in normal operation can be seen in section *Electrical data* on page 153.

During startup and in asymmetrical supply systems, the leakage current can be higher than normal and may cause the ELCB/RCD to trip.

Motor protection

The motor requires no external motor protection. CUE protects the motor against thermal overloading and blocking.

Protection against overcurrent

CUE has an internal overcurrent protection for overload protection on the motor output.

Protection against mains voltage transients

CUE is protected against mains voltage transients according to EN 61800-3, second environment.

EMC-correct installation

The motor cable must be screened for CUE to meet EMC requirements.

This section provides guidelines for good practice when installing CUE. Follow these guidelines to meet EN 61800-3, first environment.

- Use only motor and signal cables with a braided metal screen in applications without output filter. There are no special requirements to supply cables, apart from local requirements.
- Leave the screen as close to the connecting terminals as possible. See fig. 152.
- Avoid terminating the screen by twisting the ends. See fig. 154. Use cable clamps or EMC screwed cable entries instead.
- Connect the screen to frame at both ends for both motor and signal cables. See fig. 155. If the controller has no cable clamps, connect only the screen to the CUE cabinet. See fig. 156.
- Avoid unscreened motor and signal cables in electrical cabinets with frequency converters.
- Make the motor cable as short as possible in applications without output filter to limit the noise level and minimise leakage currents.
- Tighten screws for frame connections whether a cable is connected or not.
- Keep mains cables, motor cables and signal cables separated in the installation if possible.

Other installation methods may give similar EMC results if the above guidelines for good practice are followed.

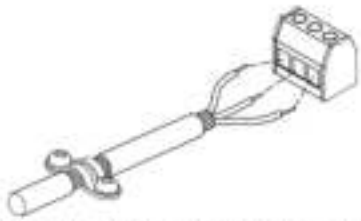

Fig. 153 Example of stripped cable with screen

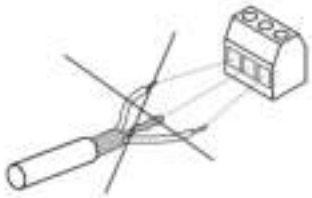

Fig. 154 Do not twist the screen ends

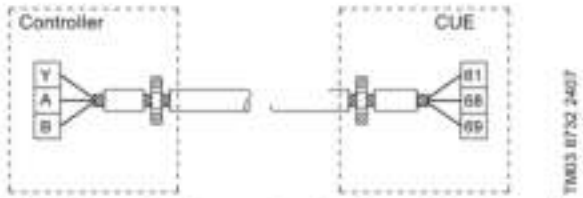

Fig. 155 Example of connection of a 3-conductor bus cable

with screen connected at both ends

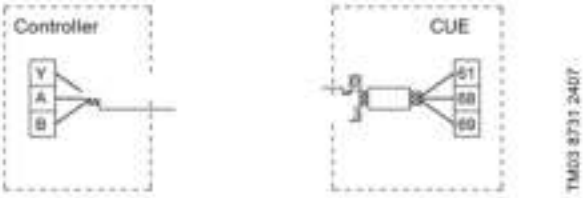

Fig. 156 Example of connection of a 3-conductor bus cable with screen connected to CUE (controller with no cable clamps)

RFI filters

To meet the EMC requirements, CUE comes with the following types of built-in radio-frequency interference filter (RFI).

Voltage [V]	Typical shaft power P2 [kW (hp)]	RFI filter type
3 x 380-500	0.55 - 90 (0.75 - 125 hp)	C1

Description of RFI filter type

C1: For use in domestic areas.

RFI filter type is according to EN 61800-3.

Mains and motor connection

Check that the mains voltage and frequency correspond to the values on the nameplate of CUE and the motor.

The motor cable must be screened for CUE to meet EMC requirements.

The supply voltage and frequency are marked on the CUE nameplate. Make sure that CUE is suitable for the power supply of the installation site.

Main switch

A main switch can be installed before the CUE cabinet according to local regulations. See fig. 152.

Wiring diagram

The wires in the terminal box must be as short as possible. Excepted from this is the protective conductor which must be so long that it is the last one to be disconnected in case the cable is inadvertently pulled out of the cable entry.

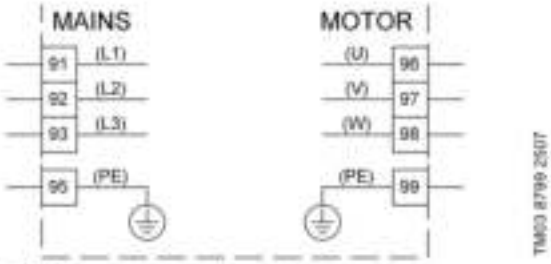

Fig. 157 Wiring diagram, three-pha

Terminal		Function
91	(L1)	Thr y
92	(L2)	
93	(L3)	
95/99	(PE)	Protective earth connection
96	(U)	Three-phase motor connection, 0-100 % of mains voltage
97	(V)	
98	(W)	

Mains connection, enclosures B2

Enclosure	Torque Nm (ft (lb))			
	Mains	Motor	Protective earth	Relay
B2	4.5 (3.3)	4.5 (3.3)	3 (2.2)	0.6 (0.4)

1. Connect the earth conductor to terminal 95 (PE). See fig. 158.
2. Connect the mains conductors to terminals 91 (L1), 92 (L2), 93 (L3).
3. Fix the mains cable with a cable clamp.

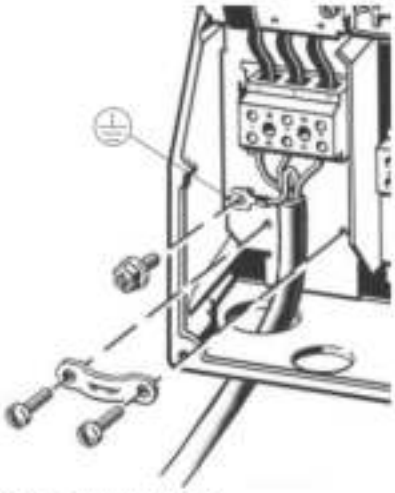

Fig. 158 Mains connection, B2

Motor connection, enclosures B2

1. Connect the earth conductor to terminal 99 (PE). See fig. 159.
2. Connect the motor conductors to terminals 96 (U), 97 (V), 98 (W).
3. Fix the screened cable with a cable clamp.

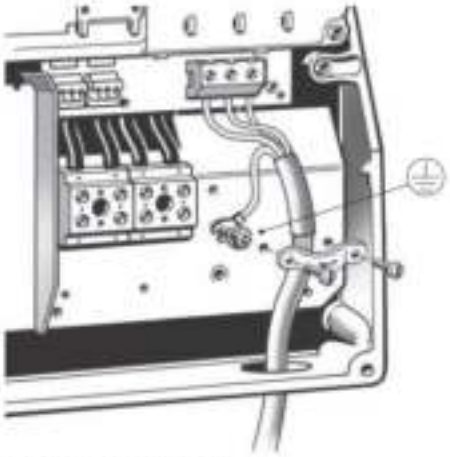

Fig. 159 Motor connection, B2

Mains connection, enclosures C1

Enclosure	Torque Nm (ft (lb))			
	Mains	Motor	Protective earth	Relay
C1	10 (7.4)	10 (7.4)	3 (2.2)	0.6 (0.4)

1. Connect the earth conductor to terminal 95 (PE). See fig. 160.
2. Connect the mains conductors to terminals 91 (L1), 92 (L2), 93 (L3).

Motor connection, enclosures C1

1. Connect the earth conductor to terminal 99 (PE). See fig. 160.
2. Connect the motor conductors to terminals 96 (U), 97 (V), 98 (W).
3. Fix the screened cable with a cable clamp.

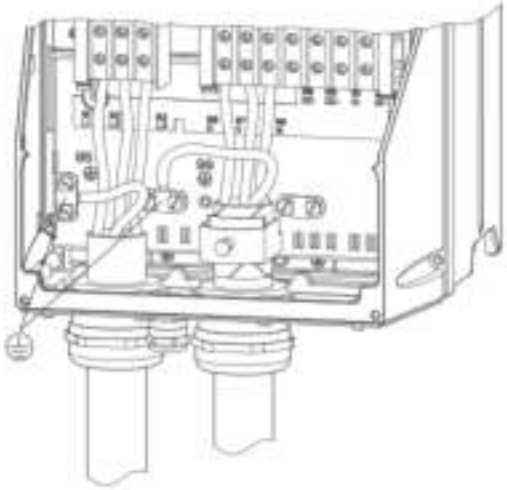

Fig. 160 Mains and motor connection, C1

STO installation, optional

To enable the integrated STO, follow these steps:

1. Remove the jumper wire between control terminals 37 and 12 or 13. Cutting or breaking the jumper is not sufficient to avoid short-circuiting.

Fig. 161 Remove jumper

2. Connect an external safety-monitoring relay via a NO safety function to terminal 37 (STO) and either terminal 12 or 13, 24 V DC.

Select and apply the components in the safety control system appropriately to achieve the desired level of operational safety. Before integrating and using STO in an installation, carry out a thorough risk analysis on the installation to determine whether the STO functionality and safety levels are appropriate and sufficient.

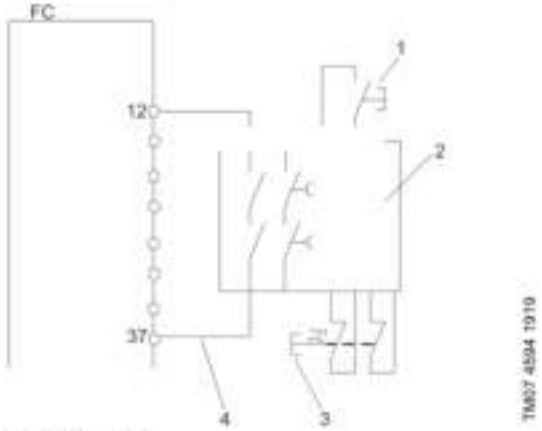

Fig. 162 STO wiring

Pos.	Description
1	Reset button
2	Safety relay (category 3, PL d or SIL2)
3	Emergency stop button
4	Short-circuit protected cable if the product is not installed inside an IP54 cabinet.

Restart behaviour after STO activation

By default the STO function is set to unintended-restart prevention behaviour. To terminate STO and resume normal operation with manual reset, do the following:

- Reapply 24 V DC supply to terminal 37.
- Send a reset signal via bus, Digital I/O or the reset button.
- Set the STO function to automatic restart by changing the value of 5-19 terminal 37 "Safe Stop" from default value 1. "Safe Stop Alarm" to value 3, "Safe Stop Warning".

Automatic restart means that STO is terminated, and normal operation is resumed, as soon as the 24 V DC is applied to terminal 37. No reset signal is required.

Restart settings

- Remove the 24 V DC voltage supply to terminal 37 by using the interrupt device while the frequency converter drives the motor, so that the mains supply is not interrupted.
- Check that the motor coasts and that the alarm Safe Stop displays in the local operating panel if mounted.
- Reapply 24 V DC to terminal 37.
- Ensure that the motor remains in the coasted state.
- Send reset signal via bus, Digital I/O or the reset button.
- Ensure that the motor becomes operational again.

Connecting the signal terminals

As a precaution, signal cables must be separated from other groups by reinforced insulation in their entire lengths.

Connect the signal cables according to the guidelines for good practice to ensure EMC-correct installation. See section *Restart behaviour after STO activation* on page 158.

- Use screened signal cables with a conductor cross-section of minimum 0.5 mm^2 and maximum 1.5 mm^2.
- Use a 3-conductor screened bus cable in new systems.

Wiring diagram, signal terminals

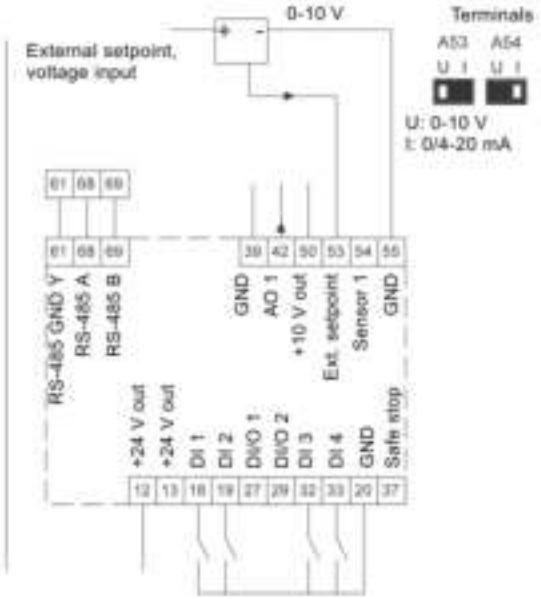

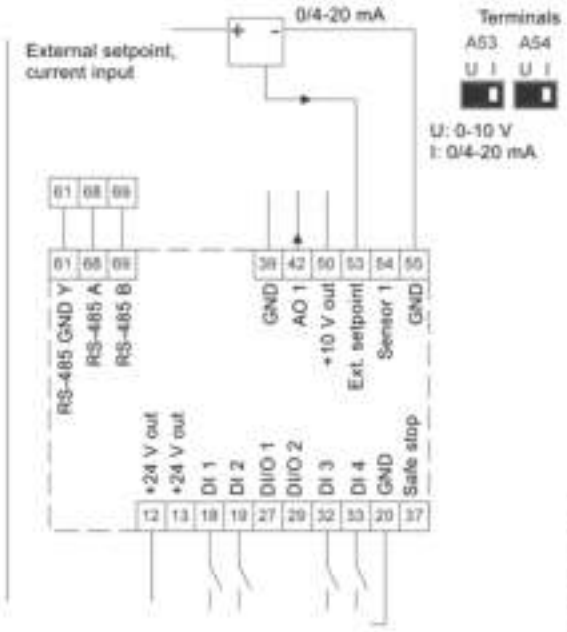

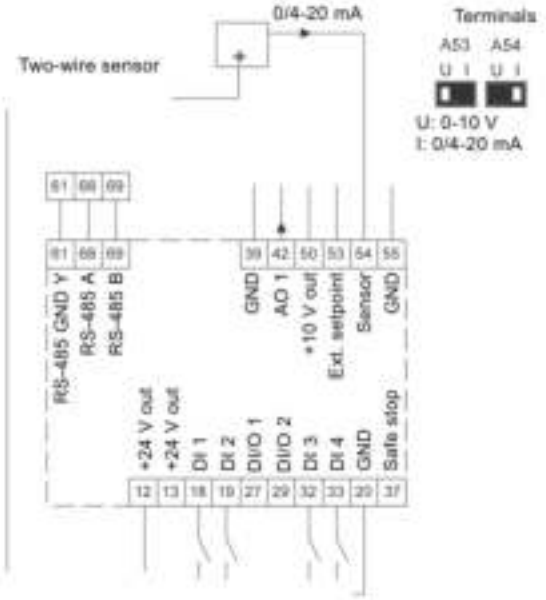

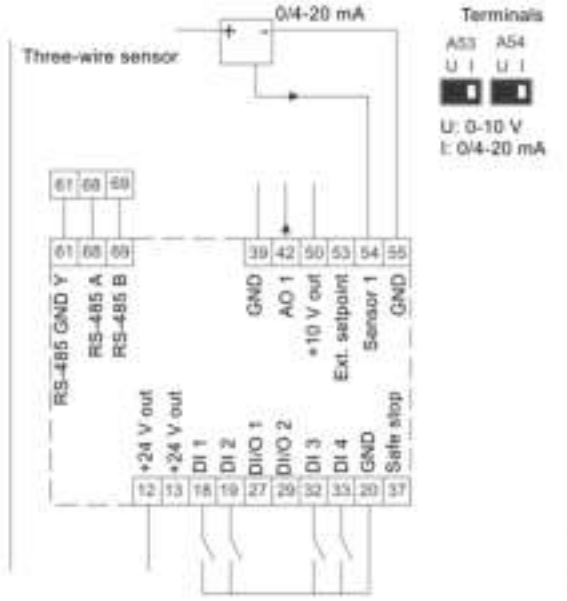

Default connections made in TPE series 1000:

- DI1 connected to GND.

Default connections made in TPE series 2000:

- DI1 connected to GND.
- A three-wire sensor is connected to terminal 12, 54 and 55.

Terminal	Type	Function
12	+24 V out	Supply to sensor
13	+24 V out	Additional supply
18	DI 1	Digital input, programmable
19	DI 2	Digital input, programmable
20	GND	Common frame for digital inputs
27	DI/O 1	Digital input/output, programmable
29	DI/O 2	Digital input/output, programmable
32	DI 3	Digital input, programmable
33	DI 4	Digital input, programmable
37	Safe stop	Safe stop

Terminal	Type	Function
39	GND	Frame for analog output
42	AO 1	Analog output, 0-20 mA
50	+10 V out	Supply to potentiometer
53	AI 1	External setpoint, 0-10 V, 0/4-20 mA
54	AI 2	Sensor input, sensor 1, 0/4-20 mA
55	GND	Common frame for analog inputs
61	RS-485 GND Y	GENIbus, frame
68	RS-485 A	GENIbus, signal A (+)
69	RS-485 B	GENIbus, signal B (-)

The RS-485 screen must be connected to frame.

Access to signal terminals

All signal terminals are behind the terminal cover of the CUE front. Remove the terminal cover as shown in fig 163.

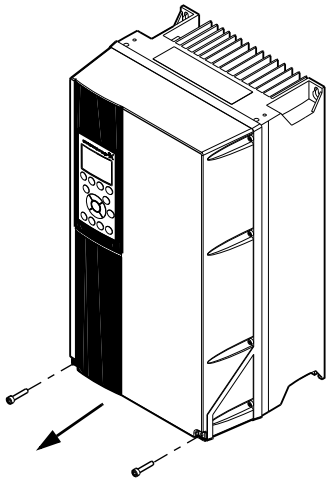

TM03 9004 1219

Fig. 163 Access to signal terminals, B2, C1

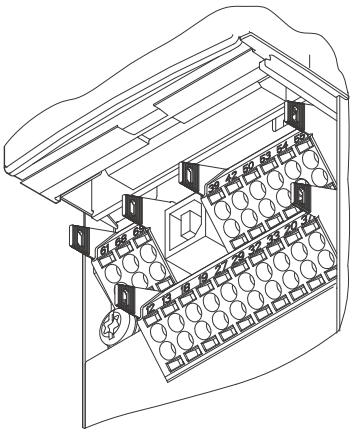

TM03 9025 2807

Fig. 164 Signal terminals, all enclosures

Fitting the conductor

1. Remove the insulation at a length of 9 to 10 mm.
2. Insert a screwdriver with a tip of maximum 0.4 x 2.5 mm into the square hole.
3. Insert the conductor into the corresponding round hole. Remove the screwdriver. The conductor is now fixed in the terminal.

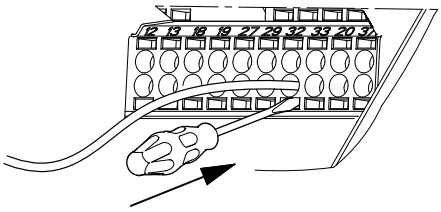

TM03 9026 2807

Fig. 165 Fitting the conductor into the signal terminal

Setting the analog inputs, terminals 53 and 54

Contacts A53 and A54 are positioned behind the operating panel and used for setting the signal type of the two analog inputs.

The factory setting of the inputs is voltage signal "U" and "U".

The factory setting of TPE Series 2000 inputs is voltage signal "U" and "I".

If a 0/4-20 mA sensor is connected to terminal 54, the input must be set to current signal "I".

Switch off the power supply before setting contact A54.

Remove the operating panel to set the contact. See fig. 166.

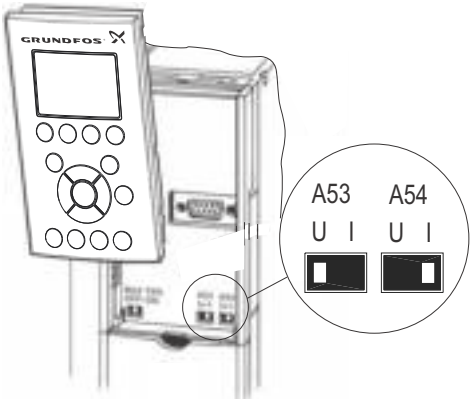

TM03 9104 1219

Fig. 166 Setting contact A54 to current signal "I"

RS-485 GENIbus network connection

One or more CUE units can be connected to a control unit via GENIbus.

The reference potential, GND, for RS-485 (Y) communication must be connected to terminal 61.

If more than one CUE unit is connected to a GENIbus network, the termination contact of the last CUE must be set to "ON" (termination of the RS-485 port).

The factory setting of the termination contact is "OFF" (not terminated).

Remove the operating panel to set the contact. See fig. 167.

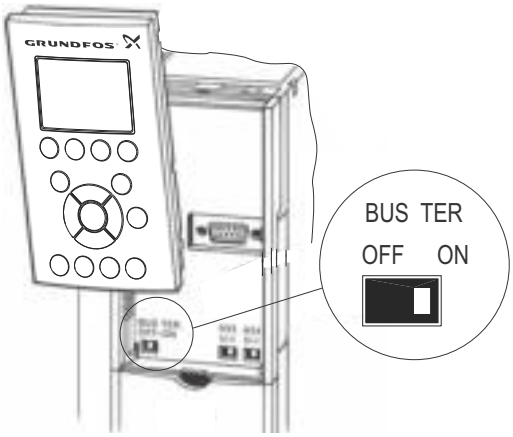

TM03 9006 1219

Fig. 167 Setting the termination contact to "ON"

Connecting the signal relays

As a precaution, signal cables must be separated from other groups by reinforced insulation in their entire lengths.

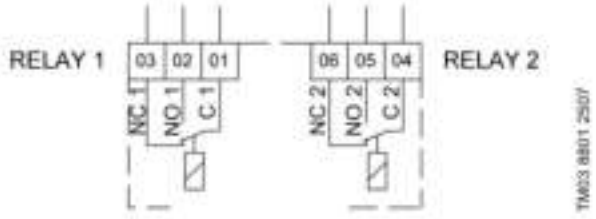

Fig. 168 Terminals for signal relays in normal state (not activated)

Terminal		Function
C 1	C 2	Common
NO 1	NO 2	Normally open contact
NC 1	NC 2	Normally closed contact

Access to signal relays

The relay outputs are positioned as shown in figs 169 and 170.

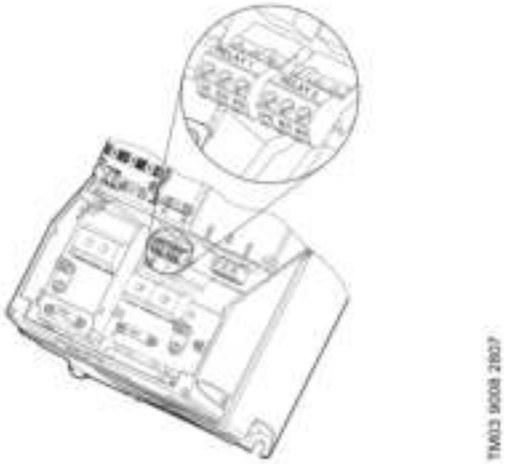

Fig. 169 Terminals for relay connection, B2

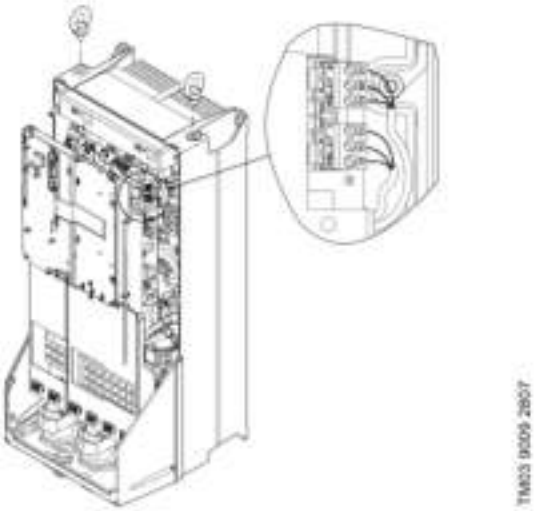

Fig. 170 Terminals for relay connection, C1

Connecting the MCB 114 sensor input module

The MCB 114 is an option offering additional analog inputs for CUE.

Configuration of MCB 114

MCB 114 is equipped with three analog inputs for the following sensors:

- One additional sensor 0/4-20 mA.
- Two Pt100/Pt1000 temperature sensors for measurement of motor bearing temperature or an alternative temperature, such as liquid temperature.

When MCB 114 has been installed, CUE automatically detects if the sensor is Pt100 or Pt1000 when it is switched on.

Wiring diagram, MCB 114

When using Pt100 with a 3-wire cable, the resistance must not exceed 30 Ω.

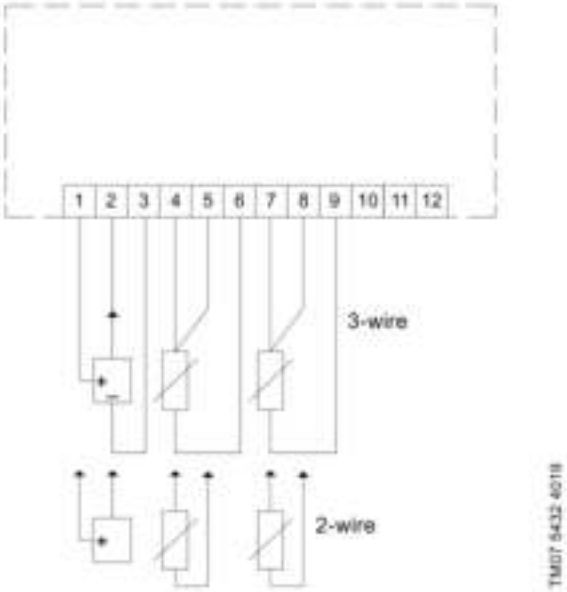

Fig. 171 Wiring diagram, MCB 114

Terminal	Type	Function
1 (VDO)	+24 V out	Supply to sensor
2 (I IN)	AI 3	Sensor 2, 0/4-20 mA
3 (GND)	GND	Common frame for analog input
4 (TEMP) 5 (WIRE)	AI 4	Temperature sensor 1, Pt100/Pt1000
6 (GND)	GND	Common frame for temperature sensor 1
7 (TEMP) 8 (WIRE)	AI 5	Temperature sensor 2, Pt100/Pt1000
9 (GND)	GND	Common frame for temperature sensor 2

Terminals 10, 11 and 12 are not used.

Fitting MCB 114 in CUE

Enclosures B2, C1

1. Switch off the power to CUE. See section *Mains and motor connection* on page *156.*
2. Remove the operating panel and the cradle from CUE. See fig. 172.
3. Fit MCB 114 into port B.
4. Connect the signal cables, and fasten the cables with the enclosed cable strips. See fig. 172.
5. Fit the cradle and the operating panel.
6. Connect power to CUE.

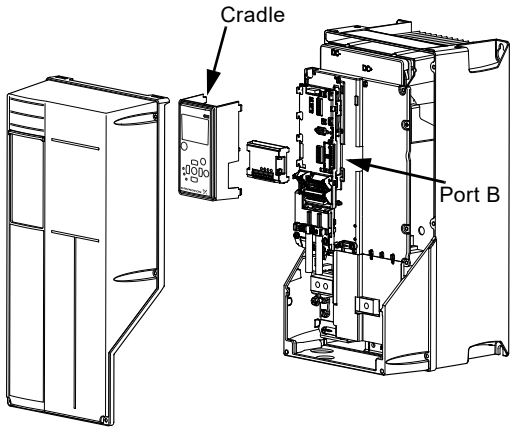

TM04 0027 4807

Fig. 172 Enclosures B2, C1

23. Electromagnetic compatibility, EMC

Electromagnetic compatibility and proper installation

General information

The growing use of electric or electronic controls and electronic equipment including PLCs and computers within all business areas require these products to fulfil the existing standards within electromagnetic compatibility. Make sure that the equipment is mounted properly.

This section deals with these issues.

What is electromagnetic compatibility

Electromagnetic compatibility is the ability of an electric or electronic device to function in a given electromagnetic environment without disturbing the surroundings and without being disturbed by other devices in the surroundings. Electromagnetic compatibility is normally split into emission and immunity.

Emission

Emission is defined as the electric or electromagnetic noise emitted by a device during operation and which can reduce the function of other devices or disturb various radio communications, including radio or TV.

Immunity

Immunity is the ability of a device to function in spite of the presence of electric or electromagnetic noise, such as sparking noise from contactors or high-frequency fields from various transmitters or mobile phones.

E-pumps and electromagnetic compatibility

All Grundfos E-pumps are CE- and C-tick-marked indicating that the product is designed to meet the EMC requirements defined by the European Union and Australia/New Zealand.

EMC and CE

All E-pumps fulfil the EMC directive 2004/108/EC and are tested according to standard EN 61800-3. All E-pumps are fitted with a radio-interference filter and varistors in the mains-supply input to protect the electronics against voltage peaks and noise present in the mains supply (immunity). At the same time, the filter limits the amount of electrical noise which the E-pump emits to the mains supply network (emission). All remaining inputs included in the electronic unit are also protected against peaks and noise which can damage or disturb the function of the unit.

On top of that, the mechanical and electronic designs are made in such a way that the unit can operate sufficiently under a certain level of radiated electromagnetic disturbance.

The limits which the E-pumps are tested against are listed in standard EN 61800-3.

Where to install E-pumps

You can use all E-pumps with built-in frequency converter motors in both residential areas (first environment) and industrial areas (second environment) within certain limitations.

What is meant by the first and the second environment

The first environment, residential areas, includes establishments directly connected to a low-voltage power supply network which supplies domestic buildings.

The second environment, industrial areas, includes establishments which are not connected to a low-voltage network that supplies domestic buildings.

The level of electromagnetic disturbance can be much higher than in the first environment.

EMC and C-tick

All E-pumps marked with the C-tick logo fulfil the requirements for EMC in Australia and New Zealand.

The C-tick approval is based on the EN standards, and the units are therefore tested according to the European standard EN 61800-3.

Only E-pumps with MGE motors are marked with C-tick.

The C-tick only covers emission.

Electromagnetic compatibility and proper installation

With the CE and C tick marks, the E-pumps live up to and have been tested to meet specific EMC requirements. This, however, does not mean that E-pumps are immune to all the sources of noise to which they can be exposed in practice. In some installations, the impact may exceed the level to which the product is designed and tested.

Furthermore, unproblematic operation in a noisy environment presupposes that the installation of the E-pump is made properly.

Below you will find a description of a correct E-pump installation.

Connection of mains supply

Practice shows that large cable loops are often made inside the terminal box to get some "spare cable". Of course, this can be useful. However, with regard to electromagnetic compatibility, it is a poor solution as these cable loops will function as antennas inside the terminal box.

To avoid problems with electromagnetic compatibility, the mains supply cable and its individual conductors in the terminal box of the E-pump must be as short as possible. If required, you can establish a spare cable outside the E-pump.

24. Flanges for TP pumps

Flange dimensions

PN 6 and PN 10 flanges

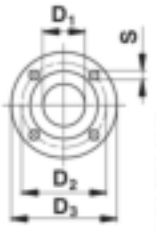

	EN 1092-2 PN 6 (0.6 MPa)						EN 1092-2 PN 10 (1.0 MPa)									
	Nominal diameter (DN)						Nominal diameter (DN)									
	32	40	50	65	80	100	32	40	50	65	80	100	125	150	200	250
D_1	32	40	50	65	80	100	32	40	50	65	80	100	125	150	200	250
D_2	90	100	110	130	150	170	100	110	125	145	160	180	210	240	295	350
D_3	120	130	140	160	190	210	140	150	165	185	200	220	250	285	340	395
S	4 x 14	4 x 14	4 x 14	4 x 14	4 x 19	4 x 19	4 x 19	4 x 19	4 x 19	4 x 19	8 x 19	8 x 19	8 x 19	8 x 23	8 x 23	12 x 23

PN 16 and PN 25 flanges

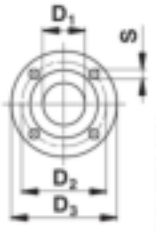

	EN 1092-2 PN 16 (1.6 MPa)									EN 1092-2 PN 25 (2.5 MPa)						
	Nominal diameter (DN)									Nominal diameter (DN)						
	32	40	50	65	80	100	125	150	200	100	125	150	200	250	300	350
D_1	32	40	50	65	80	100	125	150	200	100	125	150	200	250	300	350
D_2	100	110	125	145	160	180	210	240	295	190	220	250	310	370	430	490
D_3	140	150	165	185	200	220	250	285	340	235	270	300	360	425	485	555
S	4 x 19	4 x 19	4 x 19	4 x 19	8 x 19	8 x 19	8 x 19	8 x 23	12 x 23	8 x 23	8 x 28	8 x 28	12 x 28	12 x 31	16 x 31	16 x 34

PN 40 flanges

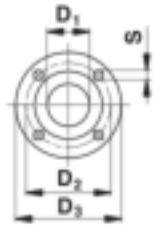

	EN/DIN 2635 PN 40 (4.0 MPa)	
	Nominal diameter (DN)	
	400	500
D_1	400	500
D_2	585	670
D_3	660	755
S	16 x 39	20 x 42

25. Curve charts

How to read the curve charts

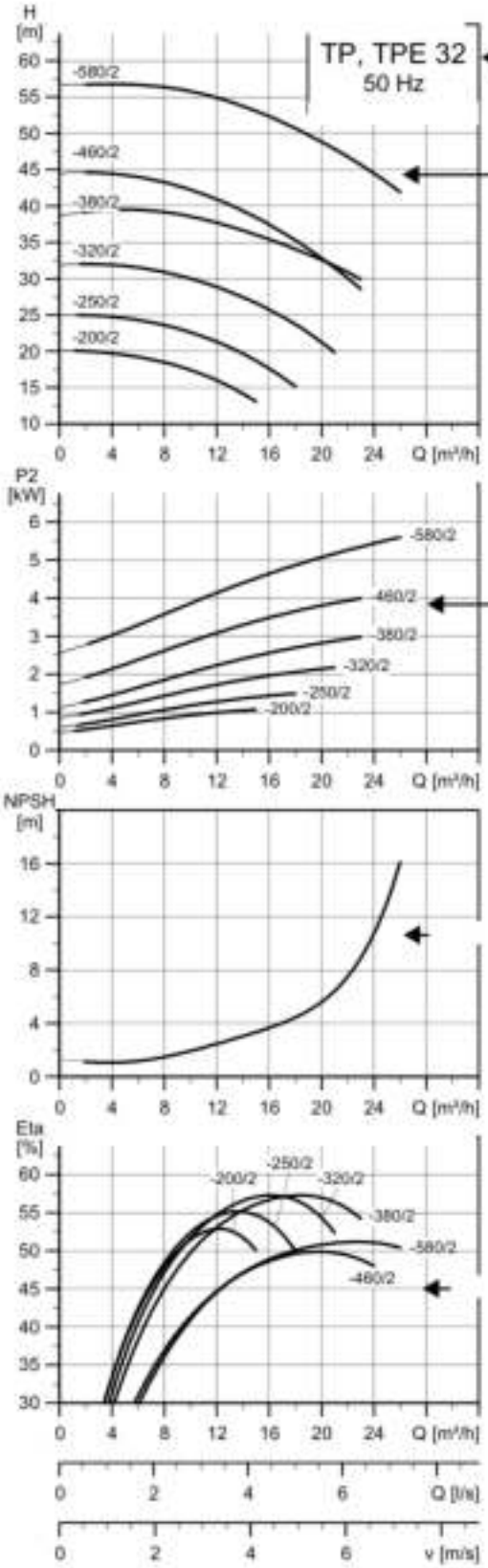

Pump type and frequency.

QH curve for the individual single-head pump. The bold curve indicates the recommended performance range.

The power curve indicates the pump input power [P2].

– The NPSH (3 %) curve shows the maximum net positive suction head, NPSH, required to ensure that the pump head is not reduced by more than 3 %. The available system pressure at the pump inlet must be according to the NPSH (3 %) curve.

The eta curve shows the pump efficiency.

TM02 5017 2115

Curve conditions

The guidelines below apply to the curves shown on the following pages:

- Tolerances to ISO 9906:2012 Grade 3B.
- The curves apply to the performance of **single-head three-phase pumps**. For other pump versions, please see the exact curves in Grundfos Product Center. See page 282. For other pump versions, the performance may differ for the following reasons:
  - The valve in twin-head pumps may cause losses.
  - Single-phase motors run at lower speed.
    Note: Grundfos does not recommend continuous parallel operation of twin-head pumps, except TPE2 D, TPE3 D, due to the increased flow rate in the pump. A too high flow rate results in noisy operation, increased wear of the impeller due to cavitation, etc.
- QH curves of the individual single-head pumps are shown with expected speed of a three-phase mains-operated motor. For further information, see the tables of technical data on the following pages. The performance of the single-phase motor is slightly reduced. Please refer to Grundfos Product Center for the exact single-phase curves. See page 282.
- Curves of TPE Series 1000 pumps and TPE Series 2000 pumps are shown as nominal curves (100 % curves) only. Please refer to Grundfos Product Center for the exact curves. See page 282.
- Measurements have been made with airless water at a temperature of 20 °C.
- The curves apply to a kinematic viscosity of υ equal to 1 mm^2/s (1 cSt).
- Due to the risk of overheating, the pump must not run constantly below the minimum flow rate indicated by the bold curves.
- If the pumped liquid density and/or viscosity are higher than those of water, it may be necessary to use a motor with a higher performance.

26. Performance curves and technical data

TPE2, TPE2 D, TPE3, TPE3 D, PN 6, 10, 16

TPE2, TPE2 D, TPE3, TPE3 D 32

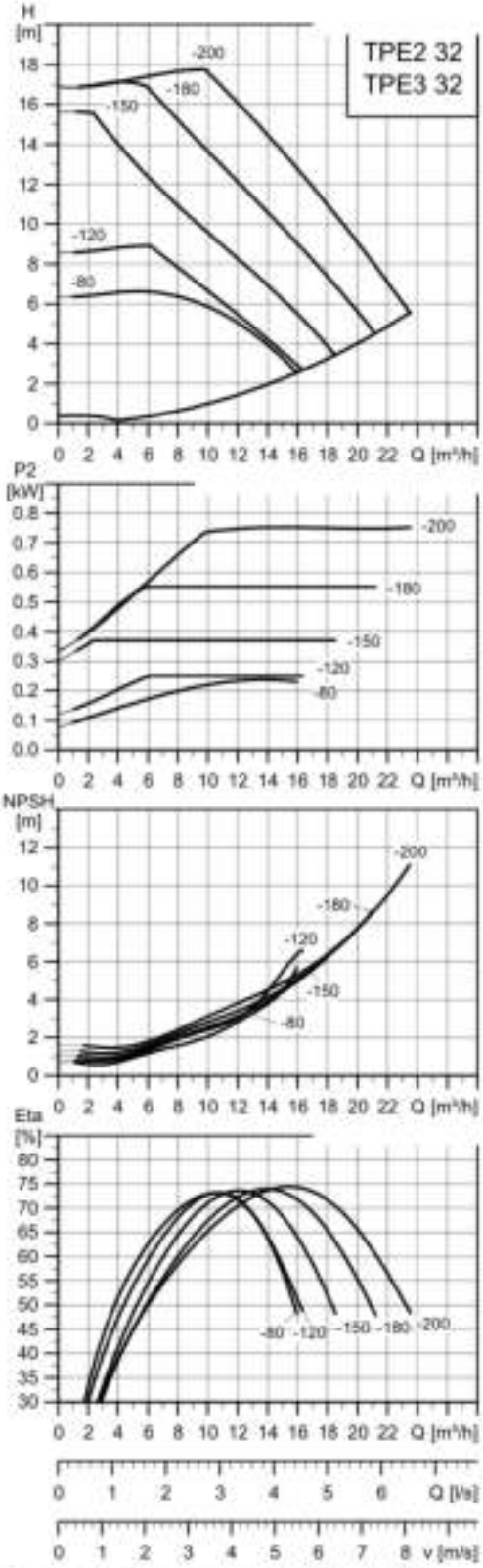

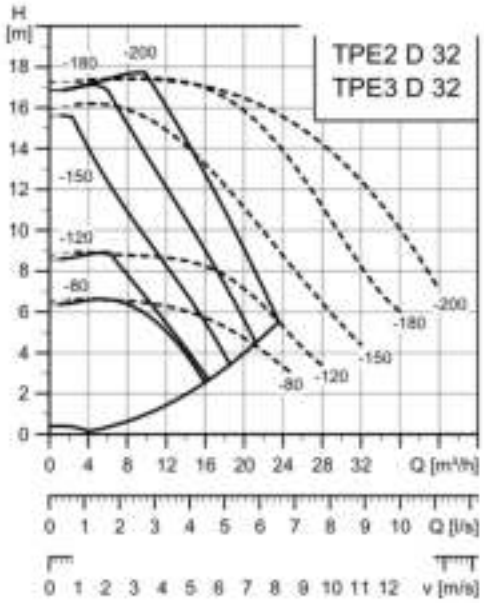

Note: The dotted QH curves apply to TPE2 D, TPE3 D i

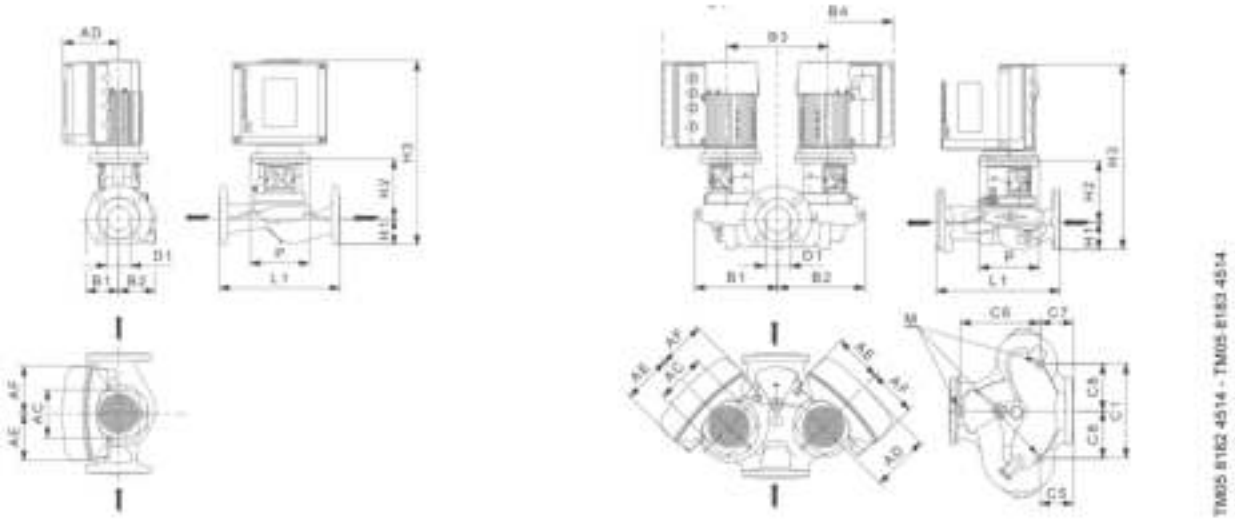

Technical data

TPE2, TPE3 32			-80	-120	-150	-180	-200
TPE2, TPE3			-	-	-	-	-
TPE2 D, TPE3 D			•	•	•	•	•
P2	1~/3~	kW	0.25	0.25	0.37	0.55	0.75
PN			PN 6/10/16	PN 6/10/16	PN 6/10/16	PN 6/10/16	PN 6/10/16
T_{min};T_{max}		[°C]	[-25;120]	[-25;120]	[-25;120]	[-25;120]	[-25;120]
D1		[mm]	32	32	32	32	32
AC	1~/3~	[mm]	122/122	122/122	122/122	122/122	122/122
AD	1~/3~	[mm]	158/158	158/158	158/158	158/158	158/158
AE	1~/3~	[mm]	106/134	106/134	106/134	106/134	106/134
AF	1~/3~	[mm]	106/134	106/134	106/134	106/134	106/134
B1		[mm]	165	165	165	165	165
B2★		[mm]	73/210	73/210	73/210	73/210	73/210
B3		[mm]	73/209	73/209	73/209	73/209	73/209
B4★		[mm]	260	260	260	260	260
	1~	[mm]	-/317	-/317	-/317	-/317	-/317
	3~	[mm]	-/337	-/337	-/337	-/337	-/337
C1★		[mm]	-/263	-/263	-/263	-/263	-/263
C5★		[mm]	-/50	-/50	-/50	-/50	-/50
C6★		[mm]	-/97	-/97	-/97	-/97	-/97
C7★		[mm]	-/90	-/90	-/90	-/90	-/90
C8★		[mm]	-/130	-/130	-/130	-/130	-/130
L1		[mm]	220	220	220	220	220
H1★		[mm]	65/68	65/68	65/68	65/68	65/68
H2		[mm]	159	159	159	159	159
H3★	1~	[mm]	439/442	439/442	439/442	439/442	439/442
	3~	[mm]	479/482	479/482	479/482	479/482	479/482
			[illegible]	[illegible]	[illegible]	[illegible]	[illegible]

★ The dimension before the slash applies to the single-head pump, and the dimension afte he twin-head pump.

TPE2, TPE2 D, TPE3, TPE3 D 40

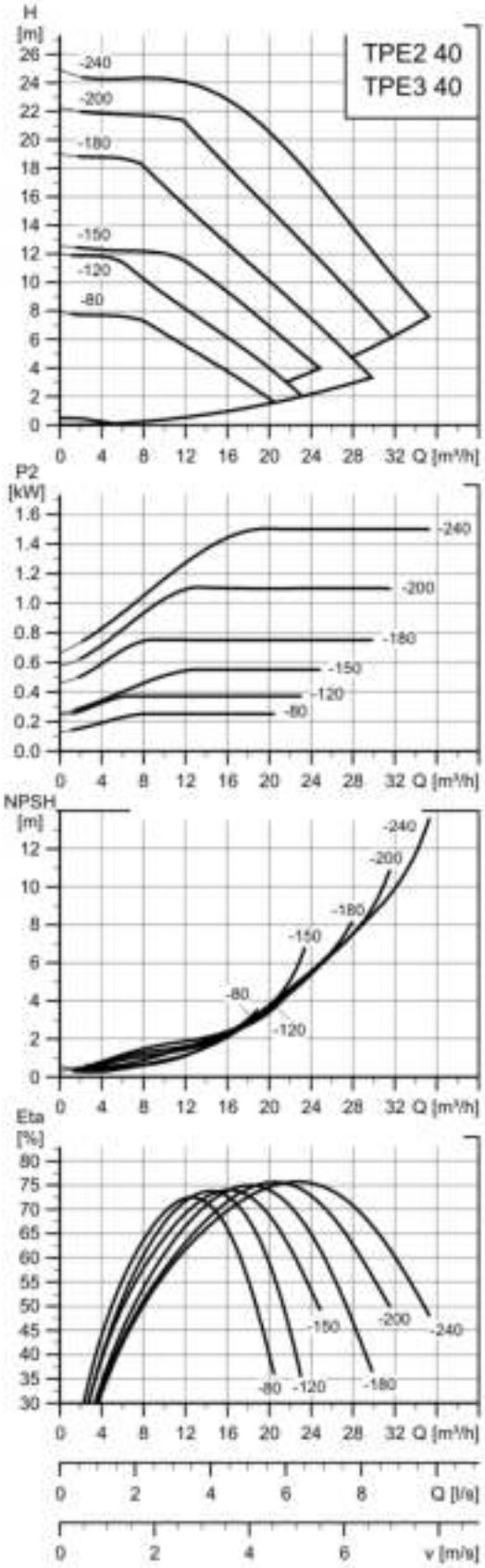

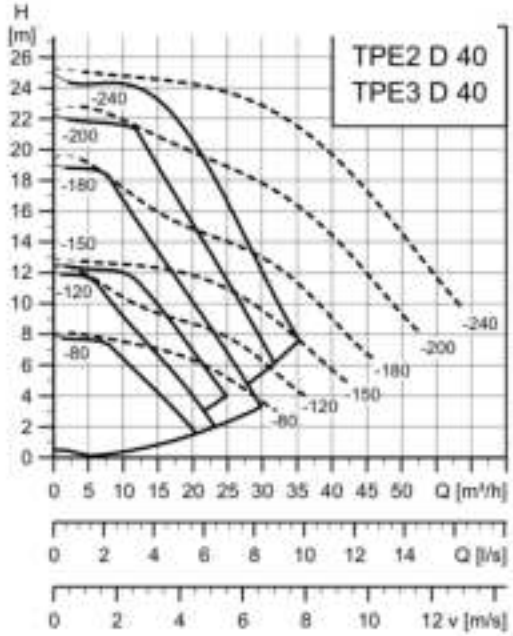

Note: The dotted QH curves apply to TPE2 D, TPE3 D i

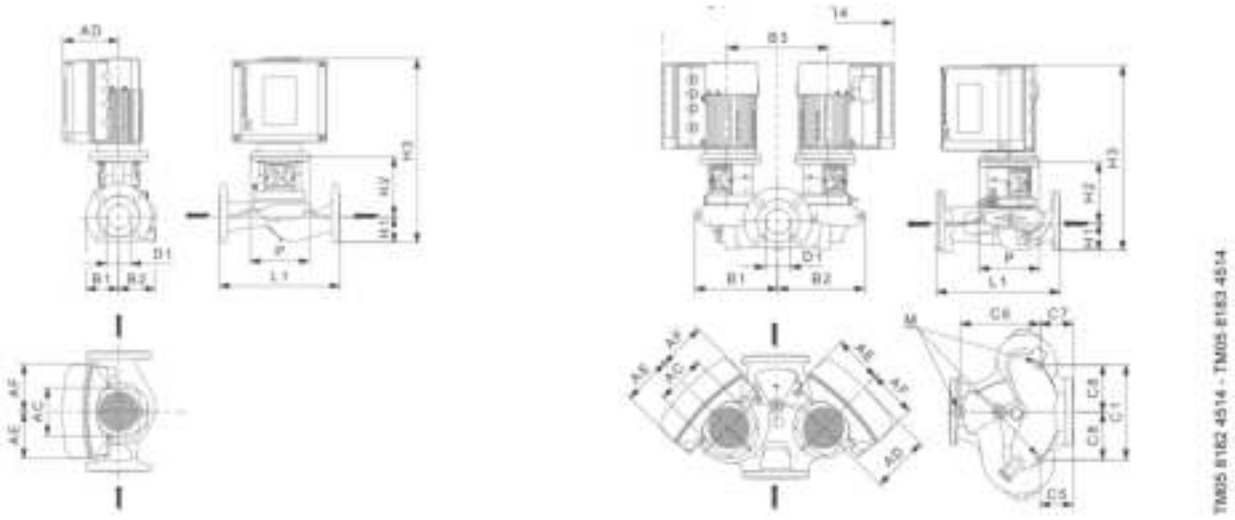

Technical data

TPE2, TPE3 40			-80	-120	-150	-180	-200	-240
TPE2, TPE3			-	-	-	-	-	-
TPE2 D, TPE3 D			■	■	■	■	-	-
P2	[illegible]	[illegible]	0.25	0.37	0.55	0.75	[illegible]	[illegible]
PN			PN 6/10/16	PN 6/10/16	PN 6/10/16	PN 6/10/16	PN 6/10/16	PN 6/10/16
T_{min};T_{max}		[°C]	[-25;120]	[-25;120]	[-25;120]	[-25;120]	[-25;120]	[-25;120]
D1		[mm]	40	40	40	40	40	40
AC	[illegible]	[mm]	122/122	122/122	122/122	122/122	122/122	122/122
AD	1~/3~	[mm]	158/158	158/158	158/158	158/158	158/158	158/158
AE	1~/3~	[mm]	106/134	106/134	106/134	106/134	106/134	106/134
AF	[illegible]	[mm]	106/134	106/134	106/134	106/134	106/134	106/134
P		[mm]	165	165	165	165	165	165
B1★		[mm]	72/218	72/218	72/218	72/218	72/218	72/218
B2★		[mm]	82/220	82/220	82/220	82/220	82/220	82/220
B3		[mm]	260	260	260	260	260	260
B4★	[illegible]	[mm]	-/317	-/317	-/317	-/317	-/317	-/317
	[illegible]	[mm]	-/337	-/337	-/337	-/337	-/337	-/337
C1★		[mm]	-/260	-/260	-/260	-/260	-/260	-/260
C5★		[mm]	-/75	-/75	-/75	-/75	-/75	-/75
C6★		[mm]	-/58	-/58	-/58	-/58	-/58	-/58
C7★		[mm]	-/155	-/155	-/155	-/155	-/155	-/155
C8★		[mm]	-/130	-/130	-/130	-/130	-/130	-/130
L1		[mm]	250	250	250	250	250	250
H1★		[mm]	65/69	65/69	65/69	65/69	65/69	65/69
H2		[mm]	162	162	162	162	162	162
H3★	[illegible]	[mm]	442/446	442/446	442/446	442/446	442/446	462/466
	[illegible]	[mm]	482/486	482/486	482/486	482/486	482/486	502/506
[illegible]			[illegible]	[illegible]	[illegible]	[illegible]	[illegible]	M12

★ The dimension before the slash applies to the single-head pump, and the dimension after the slash applies to the twin-head pump.

TPE2, TPE2 D, TPE3, TPE3 D 50

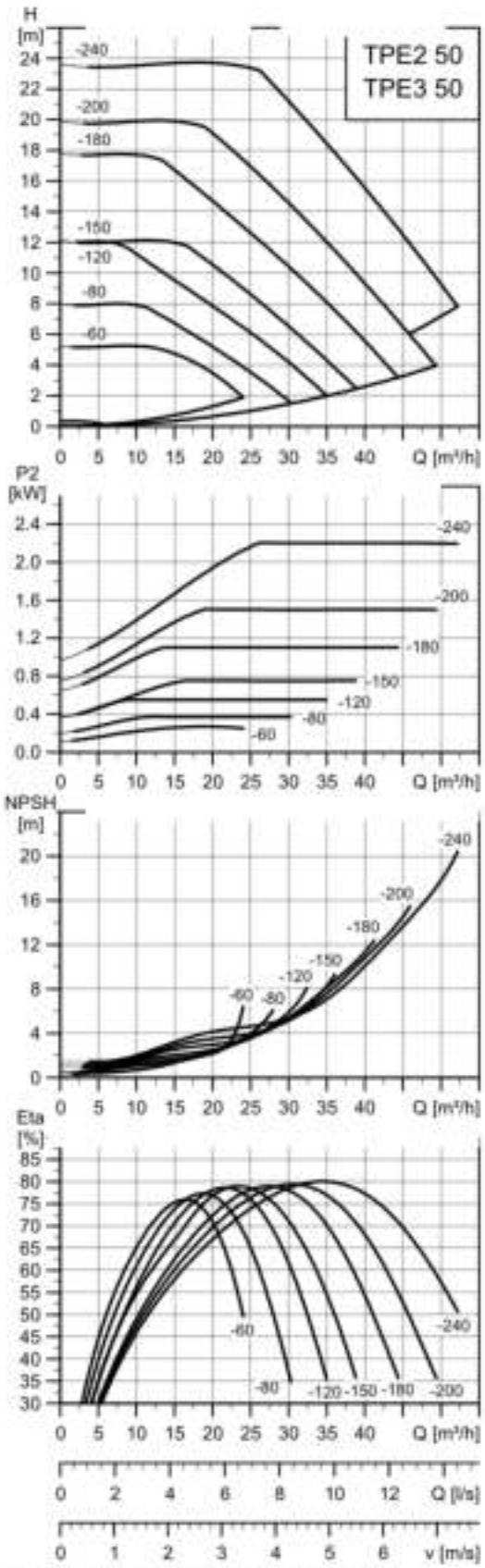

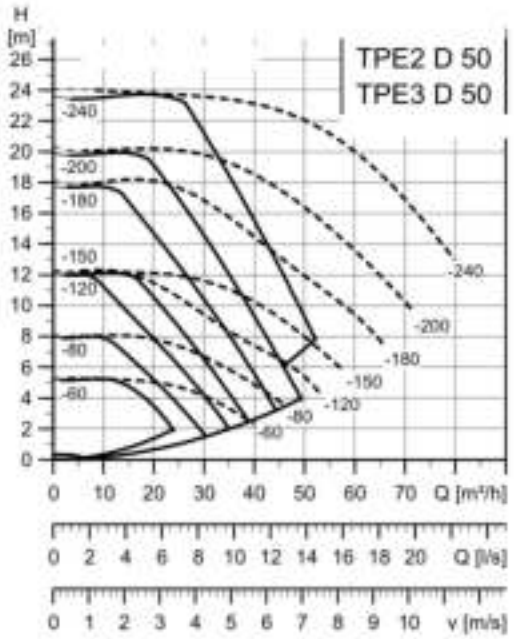

Note: The dotted QH curves apply to TPE2 D, TPE3 D

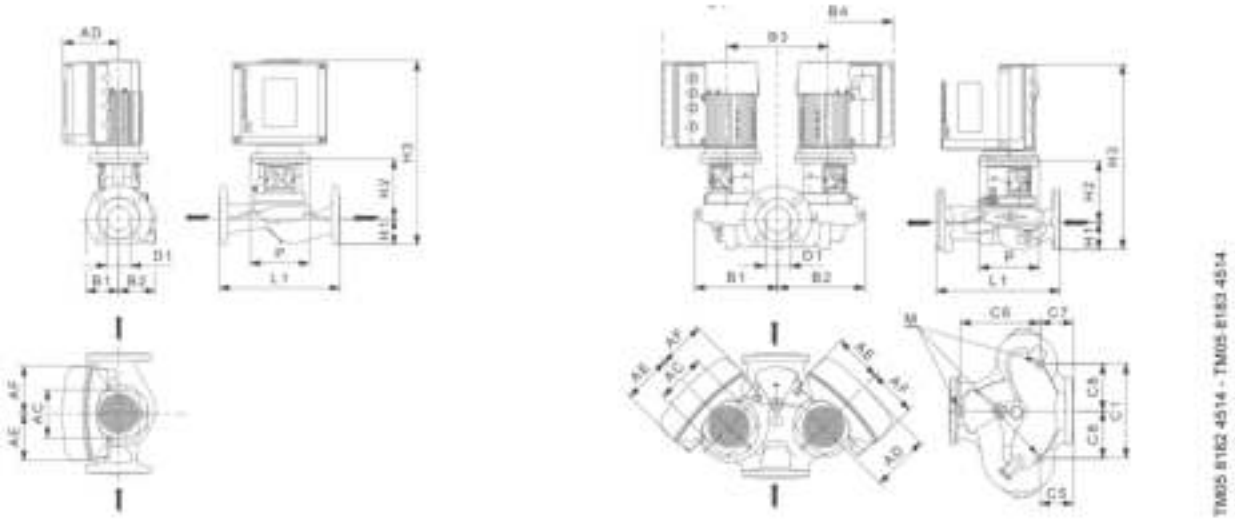

Technical data

TPE2, TPE3 50			-60	-80	-120	-150	-180	-200	-240
TPE2, TPE3			-	-	-	-	-	-	-
TPE2 D, TPE3 D			•	•	•	•	-	•	•
P2	1~/3~	kW	0.37	0.37	0.55	0.75	1.1	1.5	2.2
PN			PN 6/10/16	PN 6/10/16	PN 6/10/16	PN 6/10/16	PN 6/10/16	PN 6/10/16	PN 6/10/16
T_{min};T_{max}		[°C]	[-25;120]	[-25;120]	[-25;120]	[-25;120]	[-25;120]	[-25;120]	[-25;120]
D1		[mm]	50	50	50	50	50	50	50
AC	1~/3~	[mm]	122/122	122/122	122/122	122/122	122/122	122/122	122/122
AD	1~/3~	[mm]	158/158	158/158	158/158	158/158	158/158	158/158	158/158
AE	1~/3~	[mm]	106/134	106/134	106/134	106/134	106/134	106/134	-/134
AF	1~/3~	[mm]	106/134	106/134	106/134	106/134	106/134	106/134	-/134
P		[mm]	165	165	165	165	165	165	165
B1★		[mm]	75/223	75/223	75/223	75/223	75/223	75/223	75/223
B2★		[mm]	91/227	91/227	91/227	91/227	91/227	91/227	91/227
B3		[mm]	260	260	260	260	260	260	260
B4★	1~	[mm]	-/317	-/317	-/317	-/317	-/317	-/317	-/317
	3~	[mm]	-/337	-/337	-/337	-/337	-/337	-/337	-/337
C1★		[mm]	-/260	-/260	-/260	-/260	-/260	-/260	-/260
C5★		[mm]	-/75	-/75	-/75	-/75	-/75	-/75	-/75
C6★		[mm]	-/175	-/175	-/175	-/175	-/175	-/175	-/175
C7★		[mm]	-/75	-/75	-/75	-/75	-/75	-/75	-/75
C8★		[mm]	-/130	-/130	-/130	-/130	-/130	-/130	-/130
L1		[mm]	280	280	280	280	280	280	280
H1★		[mm]	72/75	72/75	72/75	72/75	72/75	72/75	72/75
H2		[mm]	162	162	162	162	162	162	162
H3★	1~	[mm]	449/451	449/451	449/451	449/451	449/451	469/471	-
	3~	[mm]	489/491	489/491	489/491	489/491	489/491	509/511	509/511
M			M12	M12	M12	M12	M12	M12	M12

★ The dimension before the slash applies to the single-head pump and the dimension after the slash applies to the twin-head pump.

TPE2, TPE2 D, TPE3, TPE3 D 65

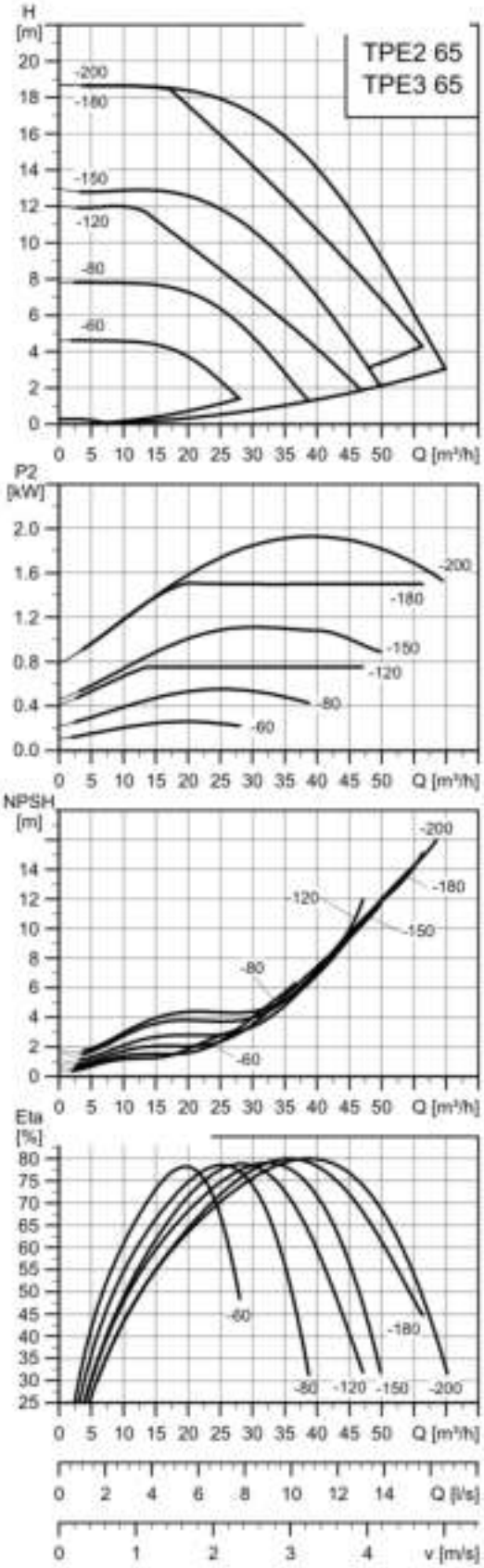

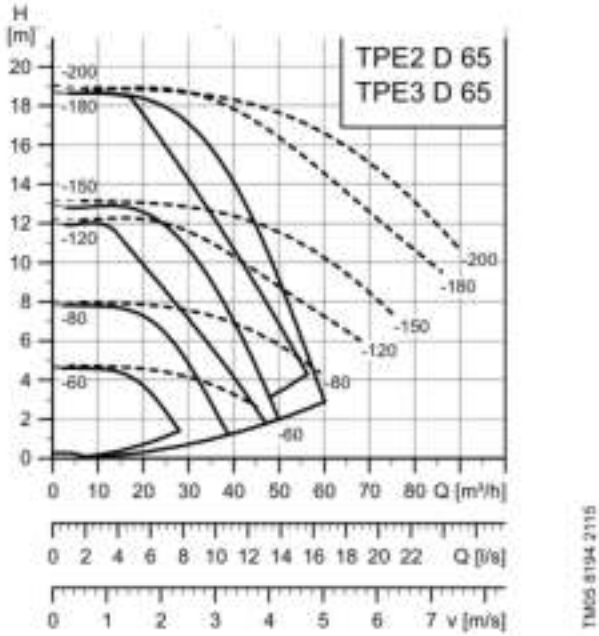

Note: The dotted QH curves apply to TPE2 D, TPE3 D

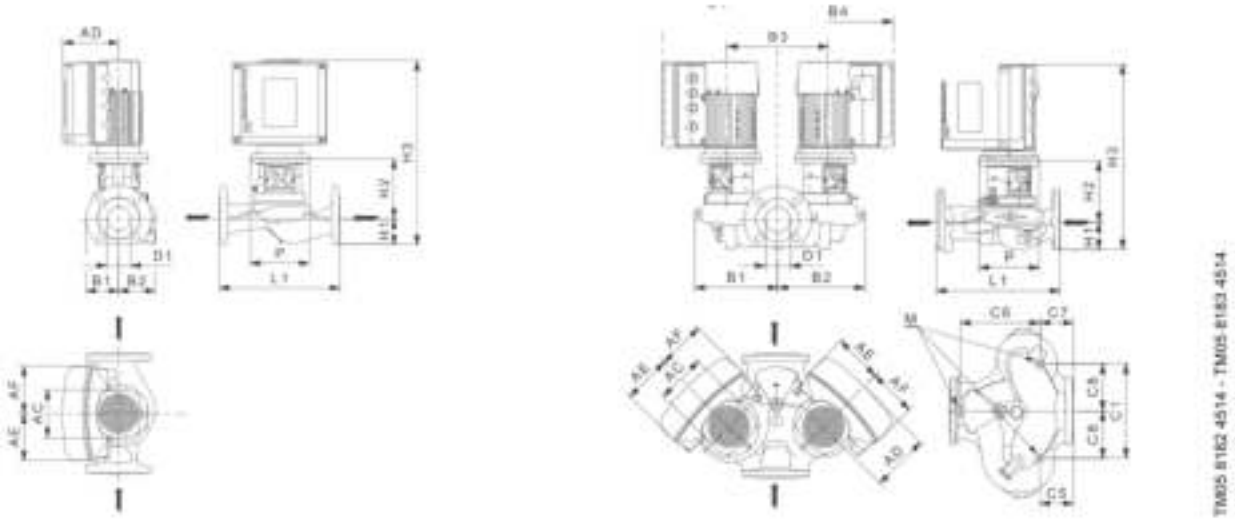

Technical data

TPE2, TPE3 65			-60	-80	-120	-150	-180	-200
TPE2, TPE3			-	-	-	-	-	-
TPE2 D, TPE3 D			•	•	•	-	•	•
P2	1~/3~	kW	0.37	0.55	0.75	[illegible]	1.5	2.2
PN			PN 6/10/16	PN 6/10/16	PN 6/10/16	PN 6/10/16	PN 6/10/16	PN 6/10/16
T_{min} - T_{max}		[°C]	[-25;120]	[-25;120]	[-25;120]	[-25;120]	[-25;120]	[-25;120]
D1		[mm]	65	65	65	65	65	65
AC	1~/3~	[mm]	122/122	122/122	122/122	122/122	122/122	122/122
AD	1~/3~	[mm]	158/158	158/158	158/158	158/158	158/158	158/158
AE	1~/3~	[mm]	106/134	106/134	106/134	106/134	106/134	-/134
AF	1~/3~	[mm]	106/134	106/134	106/134	106/134	106/134	-/134
B		[mm]	165	165	165	165	165	165
B1★		[mm]	81/228	81/228	81/228	81/228	81/228	81/228
B2★		[mm]	102/240	102/240	102/240	102/240	102/240	102/240
B3		[mm]	260	260	260	260	260	260
B4★	1~	[mm]	-/317	-/317	-/317	-/317	-/317	-/317
	3~	[mm]	-/337	-/337	-/337	-/337	-/337	-/337
C1★		[mm]	-/260	-/260	-/260	-/260	-/260	-/260
C5★		[mm]	-/92	-/92	-/92	-/92	-/92	-/92
C6★		[mm]	-/218	-/218	-/218	-/218	-/218	-/218
C7★		[mm]	-/92	-/92	-/92	-/92	-/92	-/92
C8★		[mm]	-/130	-/130	-/130	-/130	-/130	-/130
L1		[mm]	340	340	340	340	340	340
H1★		[mm]	74/78	74/78	74/78	74/78	74/78	74/78
H2		[mm]	169	169	169	169	169	169
H3★	1~	[mm]	458/462	458/462	458/462	458/462	478/482	-
	3~	[mm]	498/502	498/502	498/502	498/502	518/522	518/522
[illegible]			[illegible]	[illegible]	[illegible]	[illegible]	[illegible]	M12

★ The dimension before the slash applies to the single-head pump, and the dimension afte he twin-head pump.

TPE2, TPE2 D, TPE3, TPE3 D 80

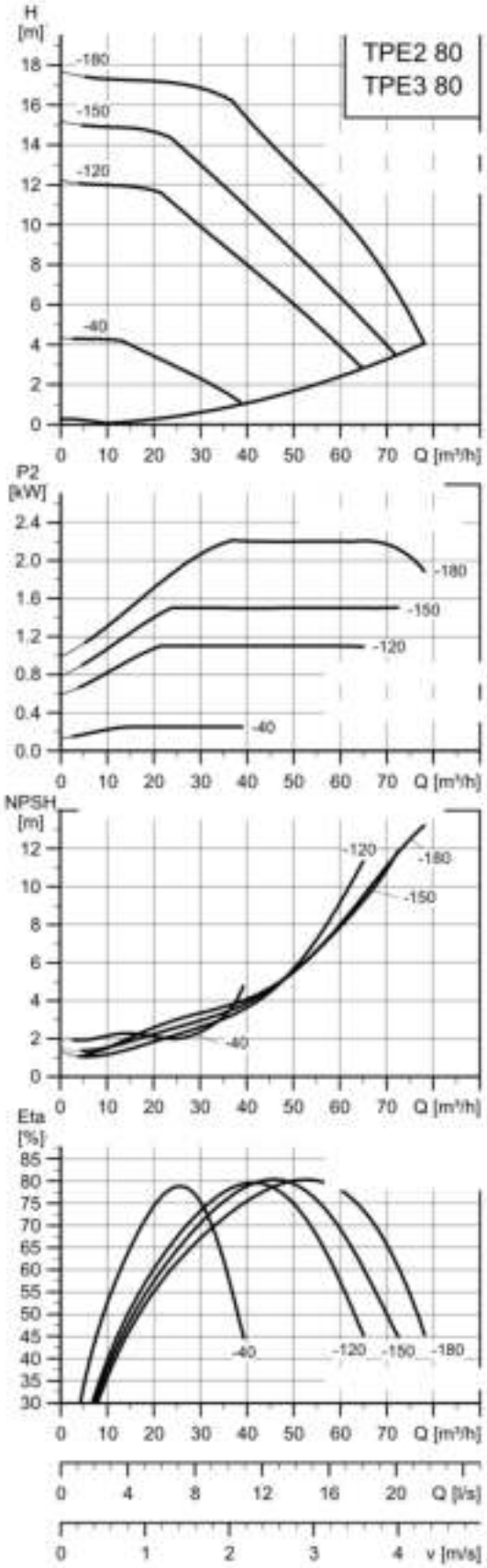

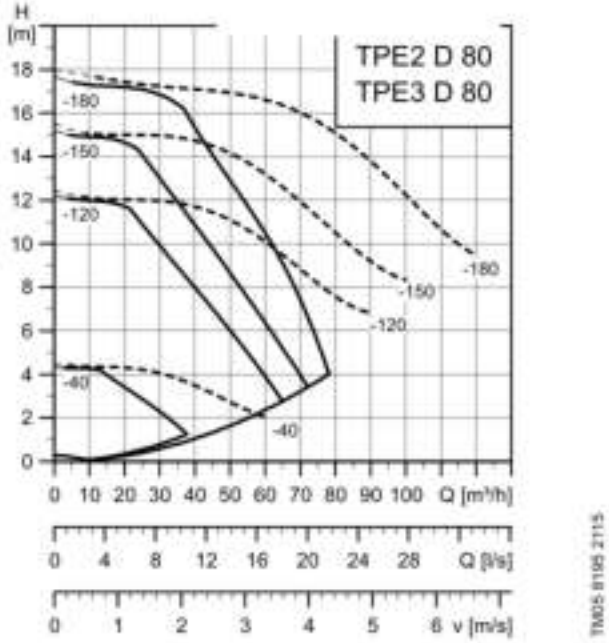

Note: The dotted QH curves apply to TPE2 D, TPE3 D

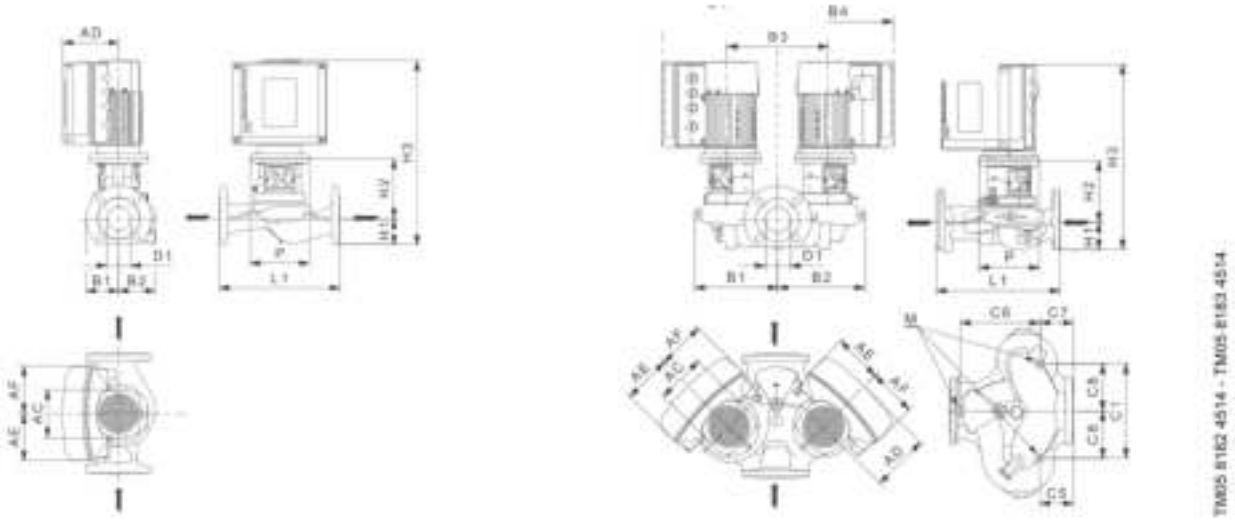

Technical data

TPE2, TPE3 80			-40	-120	-150	-180
TPE2, TPE3			-	-	•	-
TPE2 D, TPE3 D			•	-	•	•
P2		kW	0.25	0.4	1.5	2.2
PN			PN 6/10/16	PN 6/10/16	PN 6/10/16	PN 6/10/16
T_{min}/T_{max}		°C	[-25;120]	[-25;120]	[-25;120]	[-25;120]
D1		mm	80	80	80	80
AC		mm	122/122	122/122	122/122	122/122
AD		mm	158/158	158/158	158/158	158/158
AE		mm	106/134	106/134	106/134	-/134
AF		mm	106/134	106/134	106/134	-/134
P		mm	165	165	165	165
B1★		mm	97/244	97/244	97/244	97/244
B2★		mm	123/254	123/254	123/254	123/254
B3		mm	260	260	260	260
B4★		mm	-/331	-/331	-/331	-/337
		mm	-/333	-/333	-/333	-/337
C1★		mm	-/260	-/260	-/260	-/260
C5★		mm	-/102	-/102	-/102	-/102
C6★		mm	-/218	-/218	-/218	-/218
C7★		mm	-/102	-/102	-/102	-/102
C8★		mm	-/130	-/130	-/130	-/130
L1		mm	360	360	360	360
H1★		mm	94/94	94/94	94/94	94/97
H2		mm	176	176	176	176
H3★		mm	485/488	485/488	505/508	-
		mm	525/528	525/528	545/548	545/548
			[illegible]	[illegible]	[illegible]	[illegible]

★ The dimension before the slash applies to the single-head pump, and the dimension after the slash applies to the twin-head pump.

TPE2, TPE2 D, TPE3, TPE3 D 100

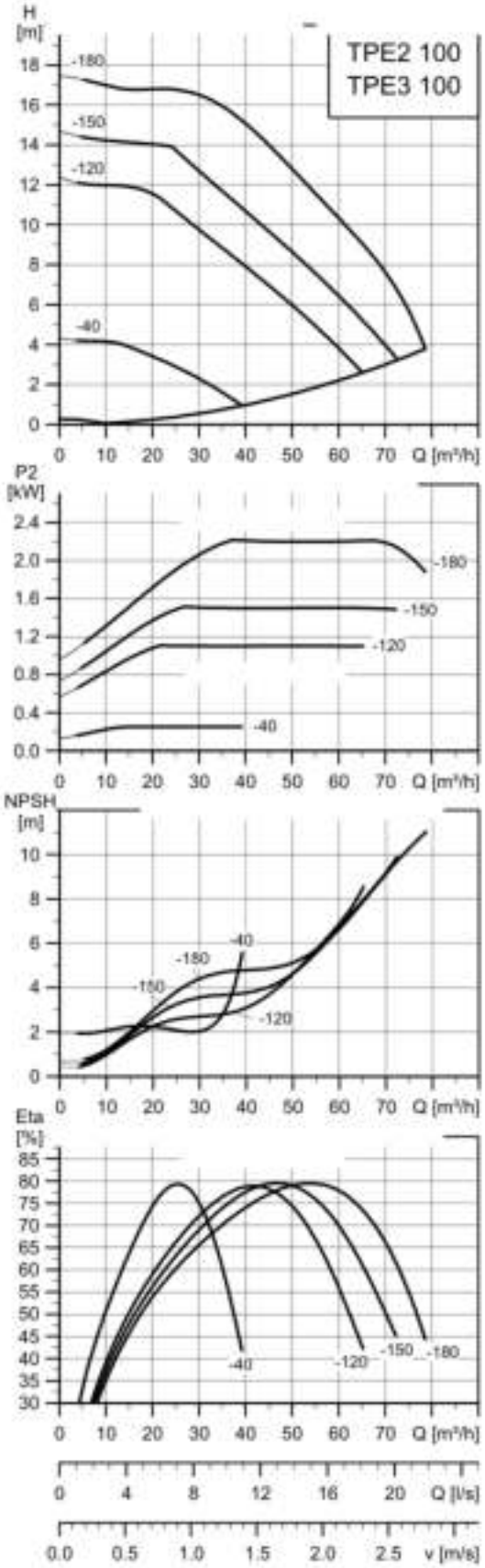

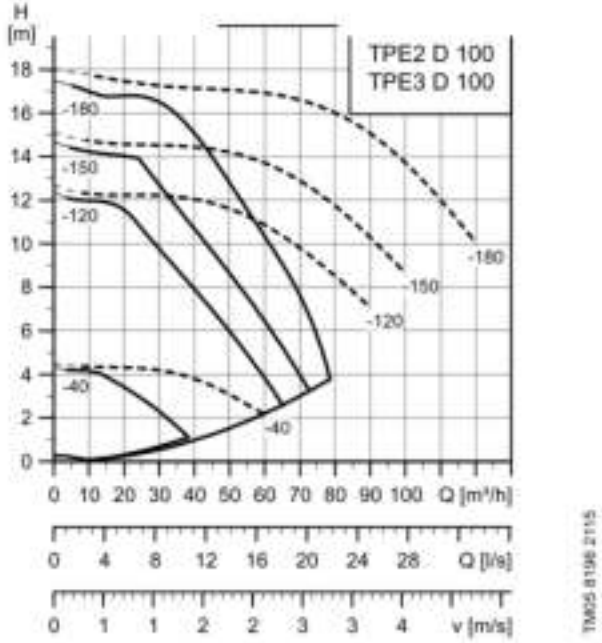

Note: The dotted QH curves apply to TPE2 D, TPE3 D

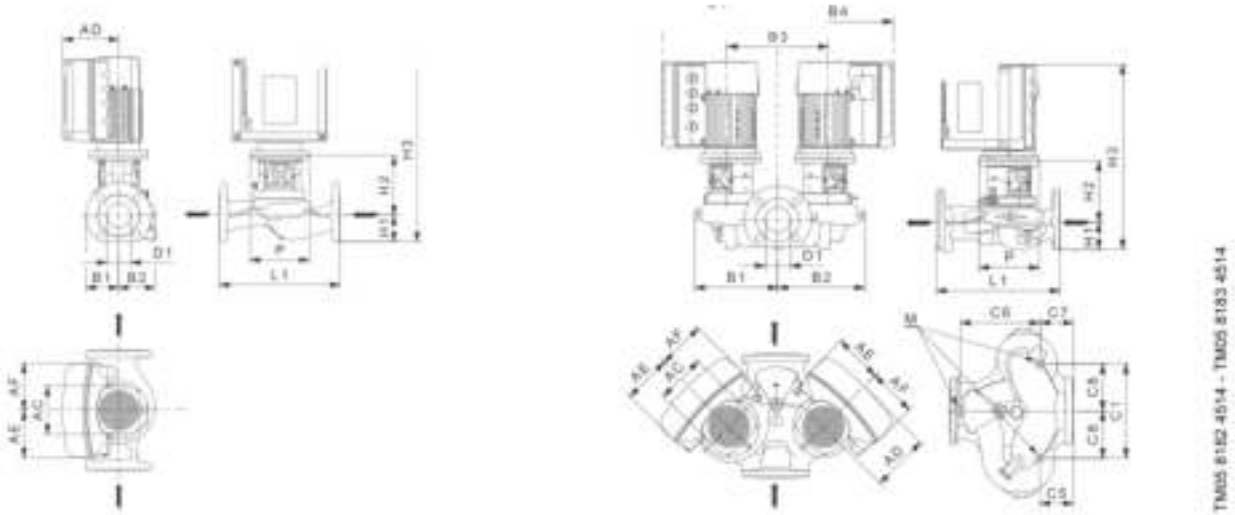

Technical data

TPE2, TPE3 100			-40	-120	-150	-180
TPE2, TPE3			-	-	-	-
TPE2 D, TPE3 D			•	•	•	•
P2	1~/3~	kW	0.25	1.1	1.5	2.2
PN			PN 6/10/16	PN 6/10/16	PN 6/10/16	PN 6/10/16
T_{min};T_{max}		[°C]	[-25;120]	[-25;120]	[-25;120]	[-25;120]
D1		[mm]	100	100	100	100
A	1~/3~	[mm]	122/122	122/122	122/122	122/122
AD	1~/3~	[mm]	158/158	158/158	158/158	158/158
AE	1~/3~	[mm]	106/134	106/134	106/134	-/134
AF	1~/3~	[mm]	106/134	106/134	106/134	-/134
P		[mm]	165	165	165	165
B1★		[mm]	98/250	98/250	98/250	98/252
B2★		[mm]	125/265	125/265	125/265	125/265
B3		[mm]	270	270	270	270
B4★	--	[mm]	-/322	-/322	-/322	-/322
	--	[mm]	-/342	-/342	-/342	-/342
C1★		[mm]	-/270	-/270	-/270	-/270
C5★		[mm]	-/147	-/147	-/147	-/147
C6★		[mm]	-/243	-/243	-/243	-/243
C7★		[mm]	-/147	-/147	-/147	-/147
C8★		[mm]	-/135	-/135	-/135	-/135
L1		[mm]	450	450	450	450
H1★		[mm]	102/104	102/104	102/104	102/104
H2		[mm]	189	189	189	189
H3★	--	[mm]	506/508	506/508	526/530	-
	--	[mm]	546/548	546/548	566/568	566/568
M			M12	M12	M12	M12

★ The dimension before the slash applies to the single-head pump, and the dimension afte he twin-head pump.

TP, TPD, TPE, TPED, 2-pole, PN 6, 10, 16, 25

TP, TPE 25-XX/2

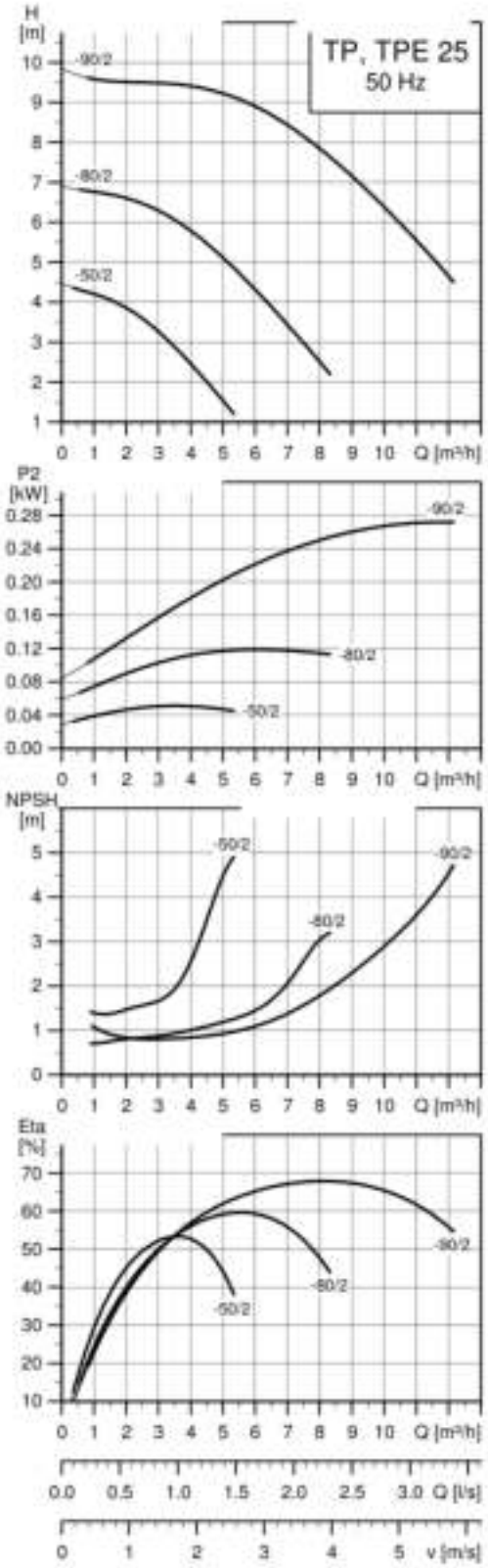

TM02 5014 4617

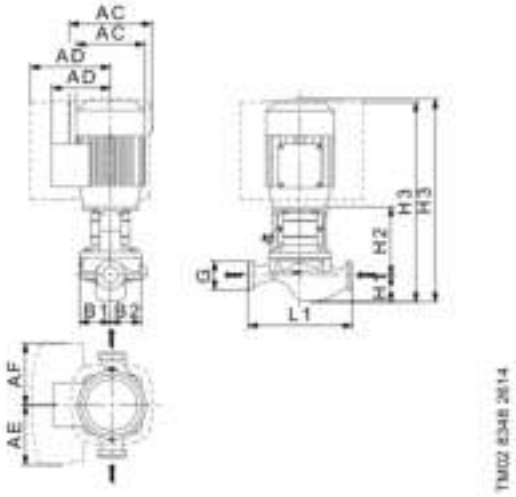

Technical data

TP 25			-50/2	-80/2	-90/2
TPD					
[illegible]			-	-	-
TPED			-		-
Series			[illegible]	100	100
IEC size	[illegible]		[illegible]	[illegible]	[illegible]
	[illegible]		[illegible]	[illegible]	[illegible]
	1~ TPE		[illegible]	[illegible]	[illegible]
	3~ TPE				
P2	1~/3~ TP	[kW]	0.12/0.12	0.18/0.18	0.37/0.37
	1~/3~ TPE	[kW]	0.12/-	0.18/-	0.37/-
PN			[illegible]	10	10
T_{min}/T_{max}		[°C]	[-25;110]	[-25;110]	[-25;110]
G			G 1 1/2	G 1 1/2	G 1 1/2
AC	1~/3~ TP	[mm]	141/124	141/124	141/141
	1~/3~ TPE	[mm]	122/-	122/-	122/-
AD	1~/3~ TP	[mm]	133/101	133/101	133/109
	1~/3~ TPE	[mm]	158/-	158/-	158/-
AE	1~/3~ TPE	[mm]	106/-	106/-	106/-
AF	1~/3~ TPE	[mm]	106/-	106/-	106/-
B1		[mm]	54	54	60
B2		[mm]	62	62	68
L1		[mm]	180	180	180
H1		[mm]	46	46	48
H2		[mm]	120	120	120
H3	1~/3~ TP	[mm]	357/345	357/345	358/358
	1~/3~ TPE	[mm]	380/-	380/-	381/-

TP, TPE 32-XX/2

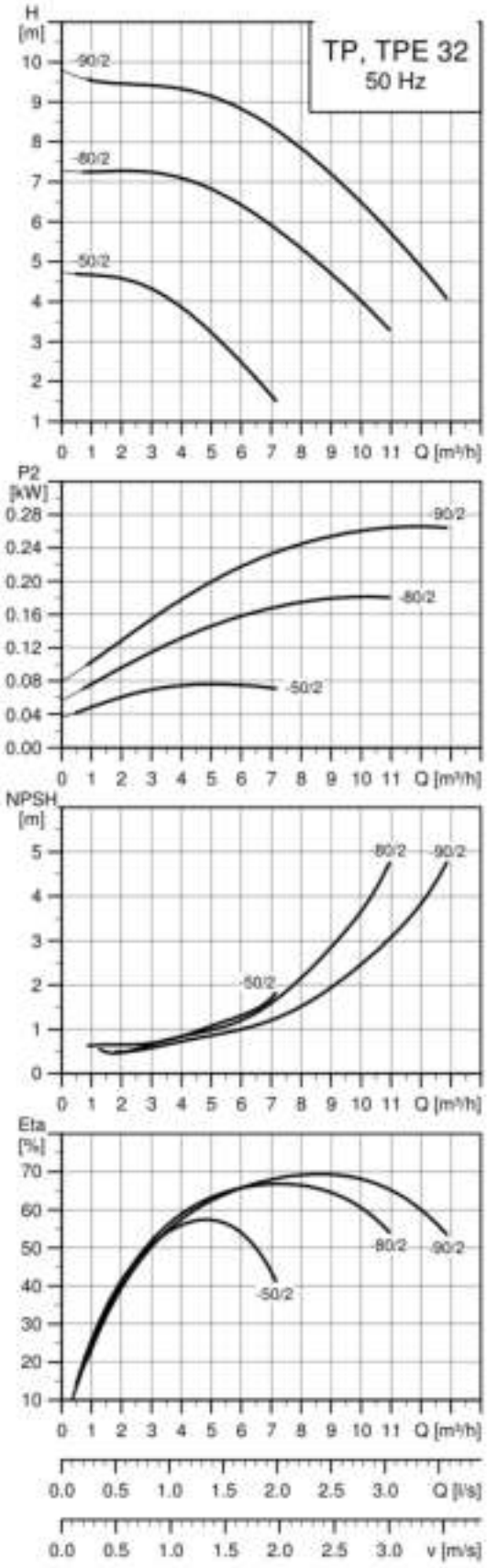

TM02 5015 4817

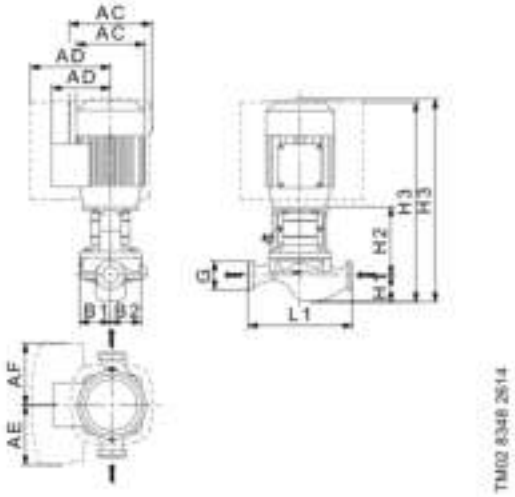

Technical data

TP 32			-50/2	-80/2	-90/2
TPD					
[illegible]			-	-	-
TPED			-		-
Series			100	100	100
IEC size	[illegible]		[illegible]	[illegible]	[illegible]
	[illegible]		[illegible]	[illegible]	[illegible]
	1~ TPE		[illegible]	[illegible]	[illegible]
	3~ TPE				
P2	1~/3~ TP	[kW]	0.12/0.12	0.25/0.25	0.37/0.37
	1~/3~ TPE	[kW]	0.12/-	0.25/-	0.37/-
PN			10	10	10
T_{min}/T_{max}		[°C]	[-25;110]	[-25;110]	[-25;110]
[illegible]			G 2	G 2	G 2
AC	1~/3~ TP	[mm]	141/124	141/124	141/141
	1~/3~ TPE	[mm]	122/-	122/-	122/-
AD	1~/3~ TP	[mm]	133/101	133/101	133/109
	1~/3~ TPE	[mm]	158/-	158/-	158/-
AE	1~/3~ TPE	[mm]	106/-	106/-	106/-
AF	1~/3~ TPE	[mm]	106/-	106/-	106/-
B1		[mm]	54	54	60
B2		[mm]	62	62	68
L1		[mm]	180	180	180
H1		[mm]	48	[illegible]	[illegible]
H2		[mm]	120	120	120
H3	1~/3~ TP	[mm]	359/347	359/347	357/357
	1~/3~ TPE	[mm]	382/-	382/-	380/-

TP, TPE 32-XX/2

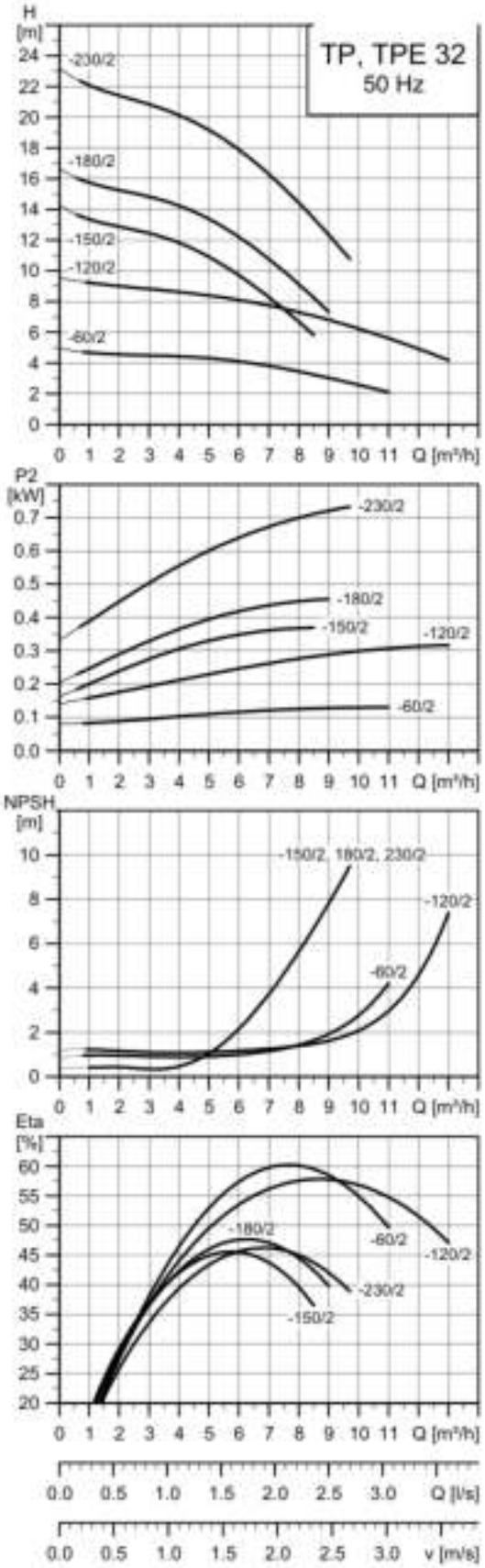

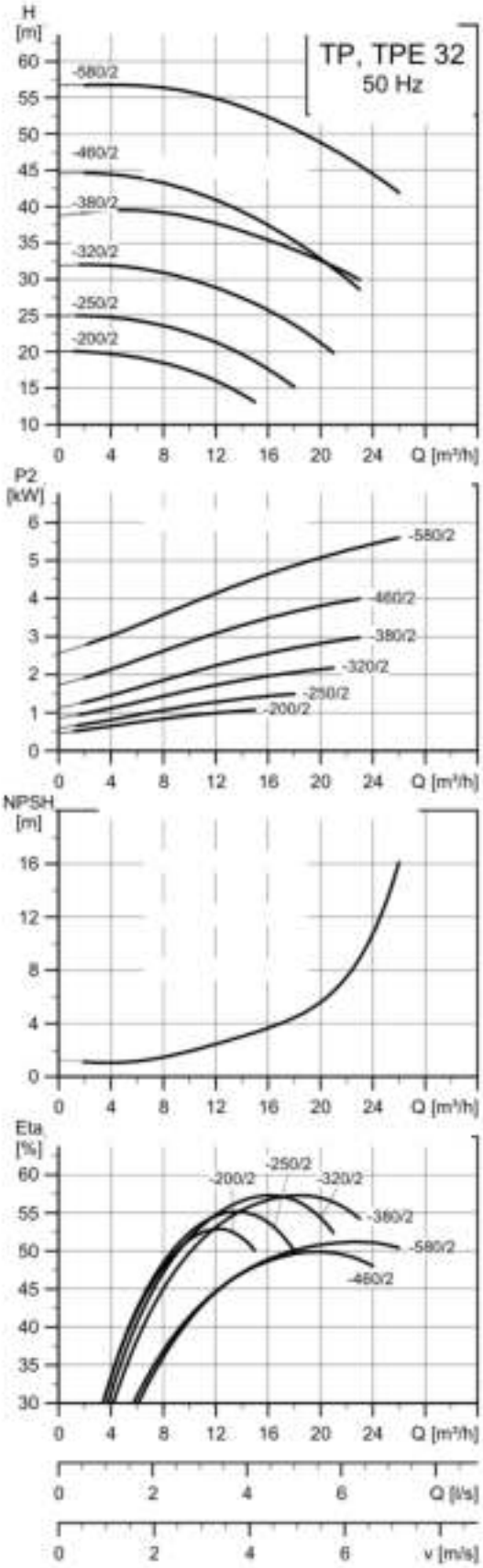

TM02 5016 2115

TM02 5017 2115

Note: All curves apply to single-head pumps. For further information, see page 167.

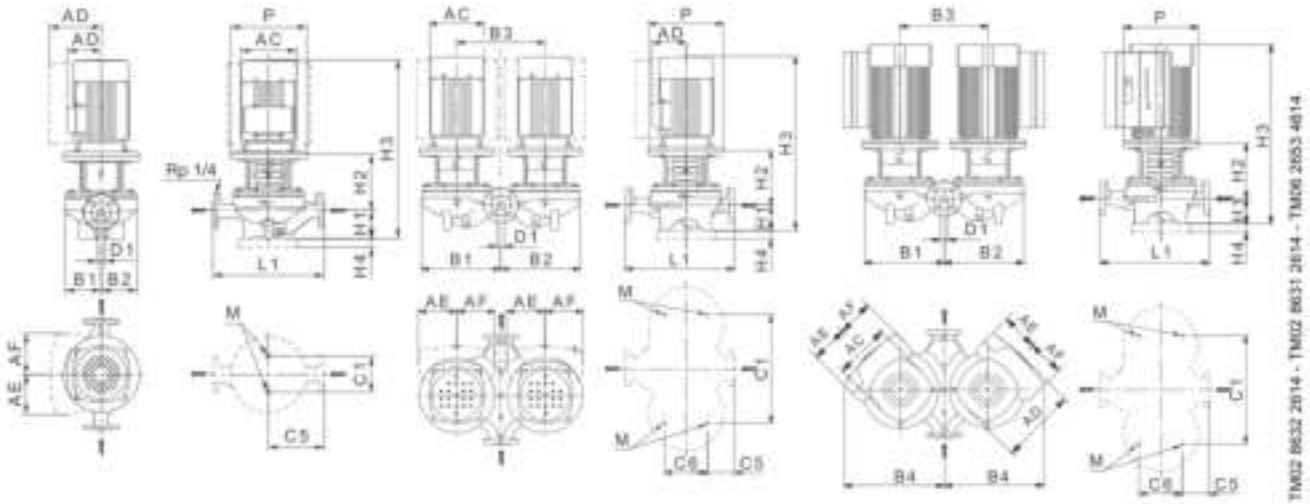

Technical data

[illegible]			-60/2	-120/2	-150/2	-180/2	-230/2	-200/2	-250/2	-320/2	-380/2	-460/2	-580/2
TPD			•	•	•	•	•	•	•	•	•	•	•
[illegible]							•	•	•	•	•	•	•
TPED							•	•	•	•	•	•	•
Series			200	200	200	200	200	300	300	300	300	300	300
IEC size	[illegible]		[illegible]	[illegible]	[illegible]	80	80	80	[illegible]				
	[illegible]		[illegible]	[illegible]	[illegible]	[illegible]	[illegible]	80	[illegible]	[illegible]	100	112	132
	1~ TPE						[illegible]	80	[illegible]				
	3~ TPE						[illegible]	80	90	90	100	112	132
P2	1~/3~ TP ★	[kW]	0.25/0.25	0.37/0.37	0.37/0.37	0.55/0.55	0.75/0.75	-/1.1	-/1.5	-/2.2	-/3	-/4	-/5.5
	1~/3~ TPE	[kW]	-				0.75/0.75	1.1/1.1	1.5/1.5	-/2.2	-/3	-/4	-/5.5
PN			PN 6/10	PN 6/10	PN 6/10	PN 6/10	PN 6/10	PN 16	PN 16	PN 16	PN 16	PN 16	PN 16
T_{min}-T_{max}		[illegible]	[-25;140]	[-25;140]	[-25;140]	[-25;140]	[-25;140]	[-25;120]	[-25;120]	[-25;120]	[-25;120]	[-25;120]	[-25;120]
D1		[mm]	32	32	[illegible]	[illegible]	32	32	[illegible]	[illegible]	32	[illegible]	[illegible]
AC	1~/3~ TP	[mm]	124/124	141/142	141/141	141/141	141/141	-/141	-/178	-/178	-/198	-/220	-/220
	1~/3~ TPE	[mm]	-				122/122	122/122	122/122	-/122	-/191	-/191	-/191
AD	1~/3~ TP	[mm]	101/101	133/133	133/109	133/109	133/109	-/109	-/110	-/110	-/120	-/134	-/134
	1~/3~ TPE	[mm]	-				158/158	158/158	158/158	-/158	-/201	-/201	-/201
AE	1~/3~ TPE	[mm]	-				106/134	106/134	106/130	-/130	-/146	-/146	-/146
AF	1~/3~ TPE	[mm]	-				106/134	106/134	106/130	-/130	-/146	-/146	-/146
P		[mm]	[illegible]				[illegible]	200	200	200	250	250	300
[illegible]		[mm]	75/176	75/180	102/222	102/222	102/222	125/260	125/260	125/260	125/260	144/321	144/321
B2 ★★		[mm]	75/176	75/180	102/222	102/222	102/222	117/257	117/257	117/257	117/257	144/321	144/321
B3		[mm]	200	200	240	240	240	276	276	276	276	355	355
[illegible]		[mm]				-	-/327	-/345	-/338	-/334	-/384	-/421	-/421
[illegible]		[mm]	80/200	80/200	80/240	80/240	80/240	144/356	144/356	144/356	144/356	144/435	144/435
C5 ★★		[mm]	110/52	110/52	140/82	140/82	140/82	170/45	170/45	170/45	170/45	220/46	220/46
C6		[mm]	103	103	103	103	103	175	175	175	175	175	175
L1		[mm]	220	220	280	280	280	340	340	340	340	440	440
H1		[mm]	68	[illegible]	[illegible]	79	79	100	100	100	100	100	100
H2		[mm]	140/139	126	125	125	137	154	154	154	183	184	223
H3	1~/3~ TP	[mm]	387/386	385/385	395/395	447/395	447/447	-/505	-/535	-/575	-/618	-/656	-/714
	1~/3~ TPE	[mm]	-				430/470	488/528	488/488	-/528	-/616	-/618	-/712
H4 ★★★		[mm]											
[illegible]			[illegible]	M12	M12	M12	M12	M16	M16	M16	M16	M16	M16

★ TP, TPD pumps are primarily fitted with IE3 motors. See *Motor data* on page 129.
★★ The dimension before the slash applies to the single-head pump, and the dimension afte he twin-head pump.
★★★TP, TPE pumps with a H4 dimension are delivered with a base plate. See *Base plates* on pages 259- 261 for base plate dimensions.

TP, TPE 40-XX/2

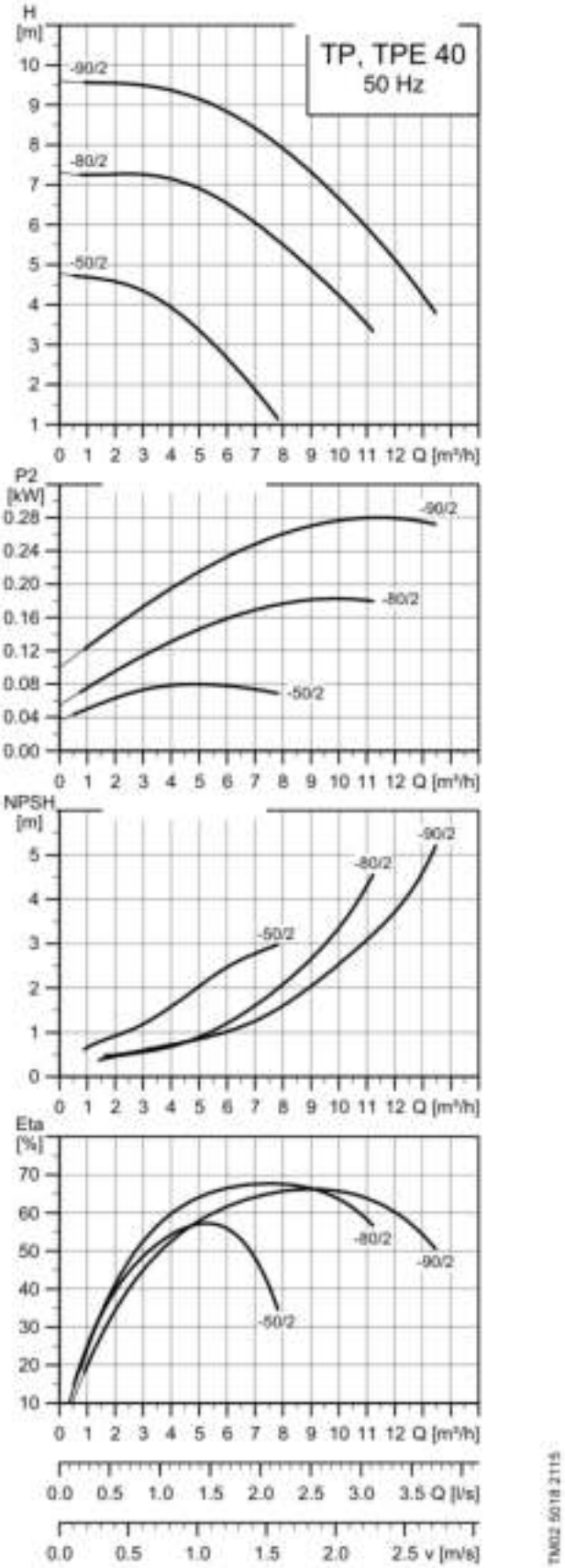

Note: All curves apply to single-head pumps. For further information, see page 167.

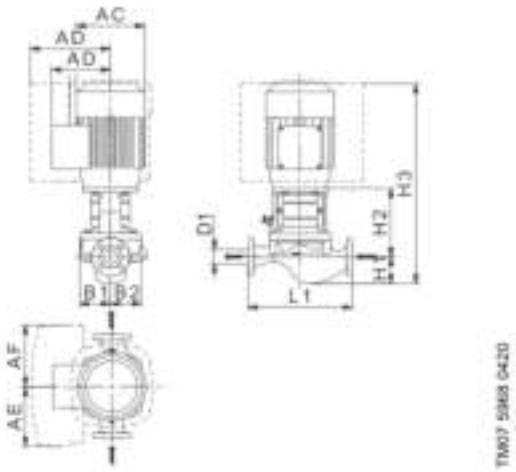

Technical data

TP 40			-50/2	-80/2	-90/2
TPD					—
[illegible]			*	*	* —
TPED					—
Series			[illegible]	100	100 —
IEC size	[illegible]		[illegible]	[illegible]	[illegible] —
	[illegible]		[illegible]	[illegible]	[illegible] —
	1~ TPE		[illegible]	[illegible]	[illegible] —
	3~ TPE				—
P2	1~/3~ TP ★	[kW]	0.12/0.12	0.25/0.25	0.37/0.37
	1~/3~ TPE	[kW]	0.12/-	0.25/-	0.37/-
PN			PN 6/10	PN 6/10	PN 6/10
T_{min};T_{max}		[°C]	[-25;110]	[-25;110]	[-25;110]
D1		[mm]	40	40	40
AC	1~/3~ TP	[mm]	141/124	141/124	141/141
	1~/3~ TPE	[mm]	122/-	122/-	122/-
AD	1~/3~ TP	[mm]	133/101	133/101	133/109
	1~/3~ TPE	[mm]	158/-	158/-	158/-
AE	1~/3~ TPE	[mm]	106/-	106/-	106/-
AF	1~/3~ TPE	[mm]	106/-	106/-	106/-
P		[illegible]			-
[illegible]		[mm]	75/-	75/-	75/-
B2 ★★		[mm]	75/-	75/-	75/-
B3		[illegible]			-
[illegible]		[illegible]			-
[illegible]		[illegible]			-
C5 ★★		[illegible]			-
C6		[illegible]			-
L1		[mm]	250	250	250
H1		[mm]	67	67	62
H2		[mm]	120	120	120
H3	1~/3~ TP	[mm]	378/366	378/366	373/373
	1~/3~ TPE	[mm]	401/-	401/-	396/-
H4 ★★★		[illegible]			-
M			-		-

★ TP, TPD pumps are primarily fitted with IE3 motors. See *Motor data* on page 129.
★★ The dimension before the slash applies to the single-head pump, and the dimension afte he twin-head pump.
★★★ TP, TPE pumps with a H4 dimension are delivered with a base plate. See *Base plates* on pages 259- 261 for base plate dimensions.

TP, TPE 40-XX/2

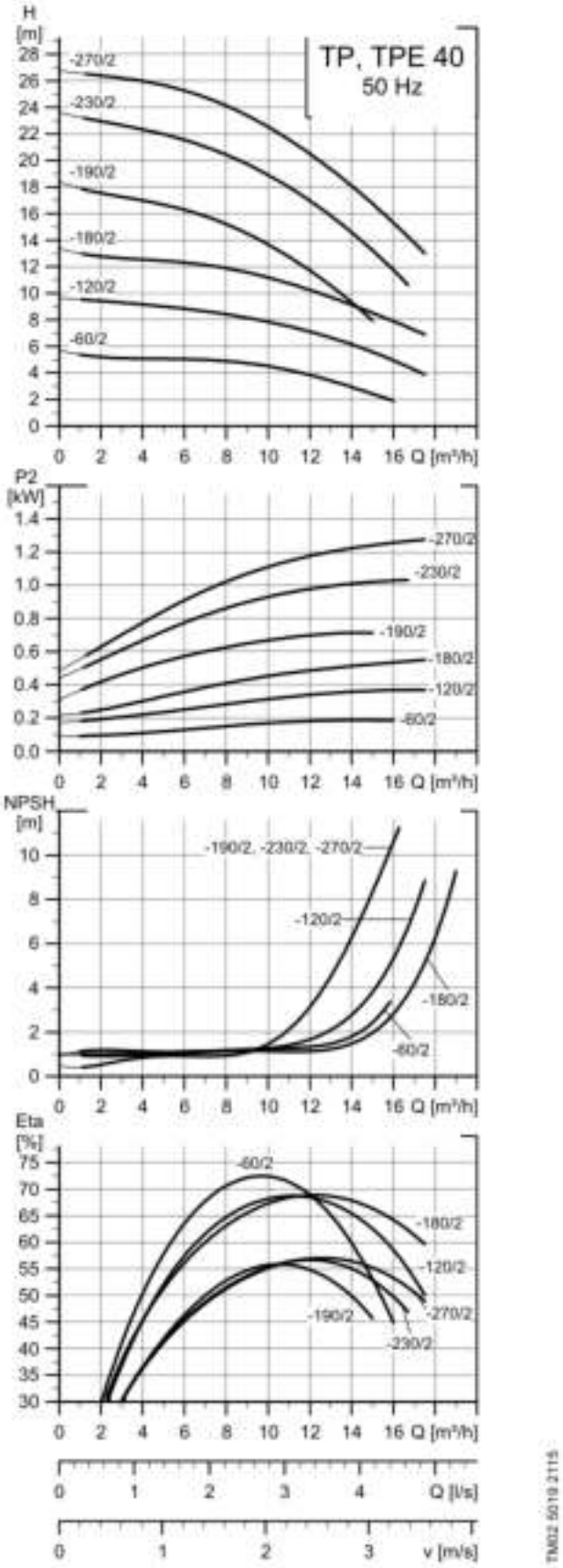

Note: All curves apply to single-head pumps. For further information, see page 167.

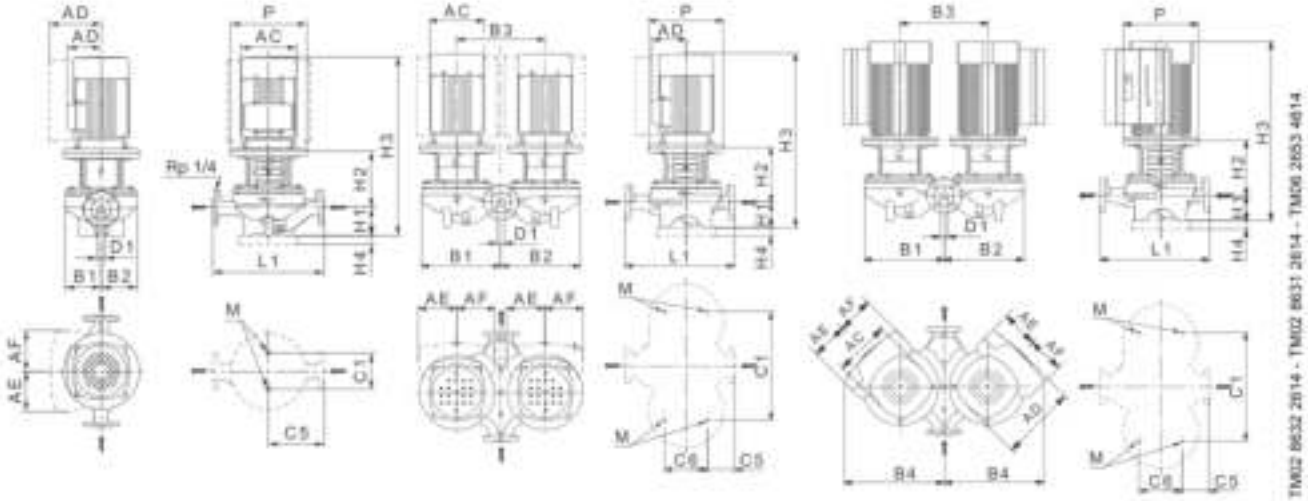

Technical data

TP 40			-60/2	-120/2	-180/2	-190/2	-230/2	-270/2
TPD			*	*		*	*	*
TPE				-				*
TPED				-				*
Series			200	200	200	200	200	200
IEC size	* **		**	71	80	80	90	90
	* **		**	**	**	80	80	90
	1~ TPE		**	**	**	**	80	90
	3~ TPE					90	90	90
P2	1~/3~ TP ★	[kW]	0.25/0.25	0.37/0.37	0.55/0.55	0.75/0.75	1.1/1.1	1.5/1.5
	1~/3~ TPE	[kW]						1.5/1.5
PN			PN 6/10	PN 6/10	PN 6/10	PN 16	PN 16	PN 16
T_{min}-T_{max}		[°C]	[-25;140]	[-25;140]	[-25;140]	[-25;140]	[-25;140]	[-25;140]
D1		[mm]	40	40	40	40	40	40
AC	1~/3~ TP	[mm]	141/141	141/141	141/141	141/141	178/141	178/178
	1~/3~ TPE	[mm]	-					122/122
AD	1~/3~ TP	[mm]	133/109	133/109	133/109	133/109	139/109	139/110
	1~/3~ TPE	[mm]	-					158/158
AE	1~/3~ TPE	[mm]	-					106/134
AF	1~/3~ TPE	[mm]	-					106/134
P		[mm]						135
B1 ★★		[mm]	75/180	75/180	100/-	102/222	102/222	102/222
B2 ★★		[mm]	75/180	75/180	100/-	102/222	102/222	102/222
B3		[mm]	200	***		240	240	240
B4 ★★		[mm]						-/327
C1 ★★		[mm]	80/200	80/200	80/-	120/240	120/240	120/240
C5 ★★		[mm]	125/45	125/45	125/-	160/95	160/95	160/95
C6		[mm]	125	***		125	125	125
L1		[mm]	250	250	250	320	320	320
H1		[mm]	67	67	68	68	68	68
H2		[mm]	129	129	***	***	141	151
H3	1~/3~ TP	[mm]	387/366	387/387	442/390	439/439	499/510	539/500
	1~/3~ TPE	[mm]	-					453/493
H4 ★★★		[mm]						
M			***	M12	M12	M12	M12	M12

★ TP, TPD pumps are primarily fitted with IE3 motors. See *Motor data* on page 129.
★★ The dimension before the slash applies to the single-head pump, and the dimension afte he twin-head pump.
★★★TP, TPE pumps with a H4 dimension are delivered with a base plate. See *Base plates* on pages 259- 261 for base plate dimensions.

TP 40-XX/2

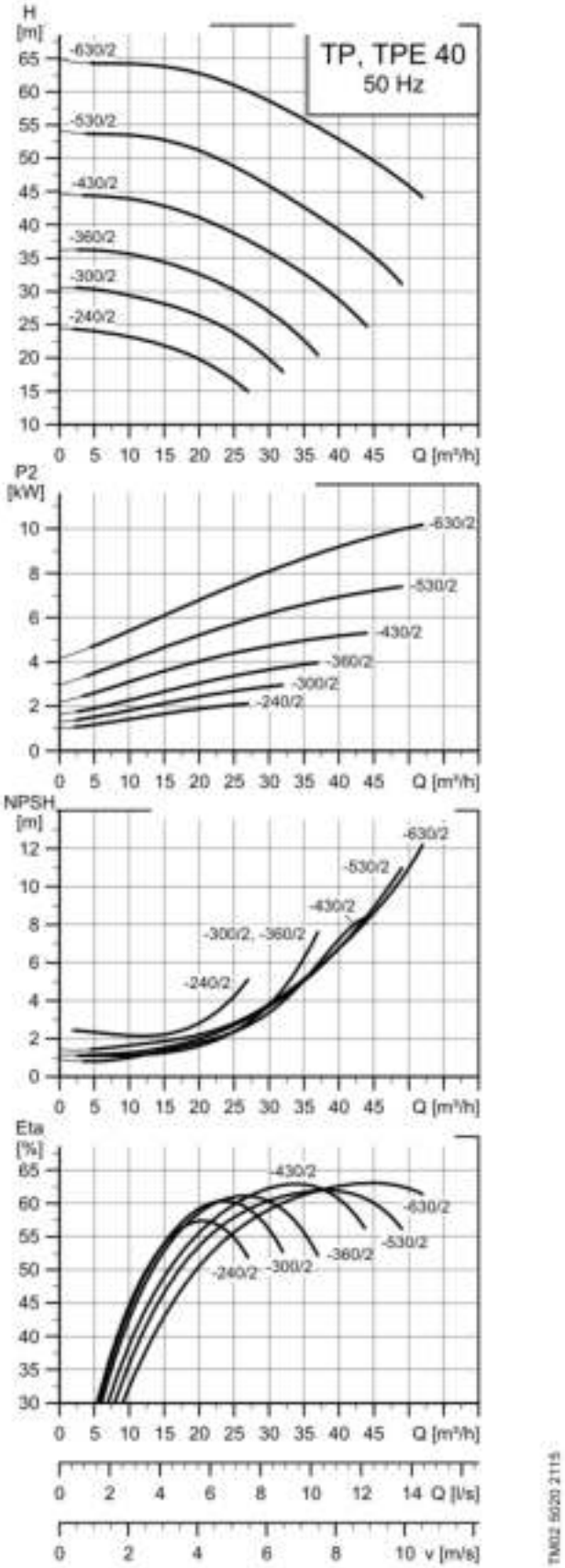

Note: All curves apply to single-head pumps. For further information, see page 167.

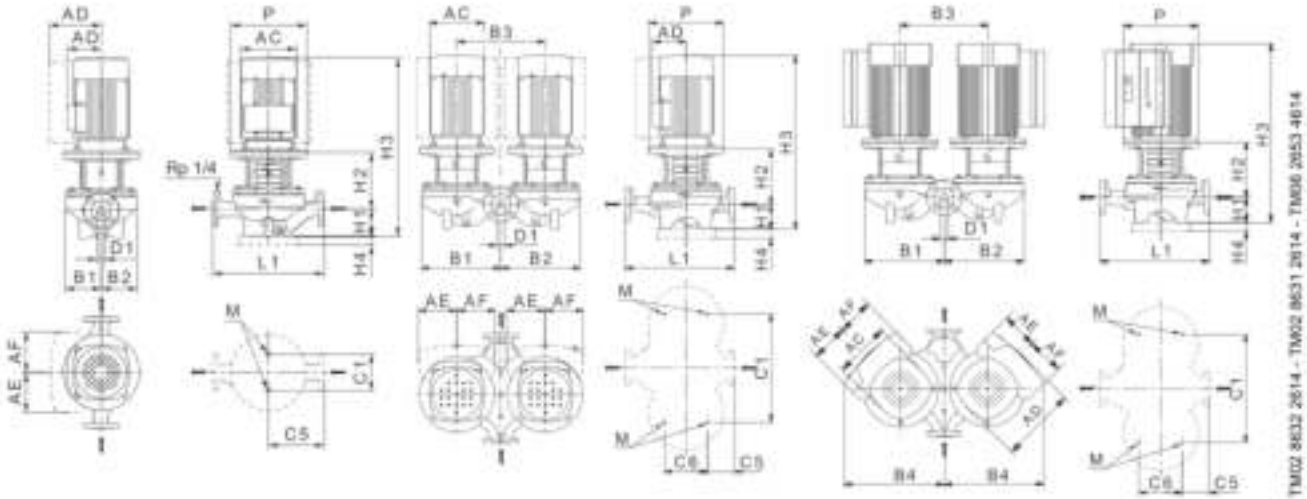

Technical data

TP 40			-240/2	-300/2	-360/2	-430/2	-530/2	-630/2
TPD			-	-	-	-	-	-
TPE				-	-	-	-	-
TPED				-	-	-	-	-
Series			300	300	300	300	300	300
IEC size	1~ TPE		90	100	112	132	132	160
	3~ TPE			100	112	132	132	160
P2	1~/3~ TP ★	[kW]	-/2.2	-/3	-/4	-/5.5	-/7.5	-/11.0
	1~/3~ TPE	[kW]	-	-/3	-/4	-/5.5	-/7.5	-/11.0
PN			PN 16	PN 16	PN 16	PN 16	PN 16	PN 16
T_{min};T_{max}		[°C]	[-25;120]	[-25;120]	[-25;120]	[-25;120]	[-25;120]	[-25;120]
D1		[mm]	40	40	40	40	40	40
AC	1~/3~ TP	[mm]	-/178	-/198	-/220	-/220	-/260	-/316
	1~/3~ TPE	[mm]	-	-/191	-/191	-/191	-/255	-/255
AD	1~/3~ TP	[mm]	-/110	-/120	-/134	-/134	-/159	-/204
	1~/3~ TPE	[mm]	-	-/201	-/201	-/201	-/237	-/237
AE	1~/3~ TPE	[mm]	-	-/146	-/146	-/146	-/173	-/173
AF	1~/3~ TPE	[mm]	-	-/146	-/146	-/146	-/173	-/173
P		[mm]	200	250	250	300	300	350
B1 ★★		[mm]	130/273	130/273	130/273	150/325	150/325	150/325
B2 ★★		[mm]	117/267	117/267	117/267	147/325	147/325	147/325
B3		[mm]	290	290	290	355	355	355
B4 ★★		[mm]		-/391	-/391	-/424	-/469	-/415
C1 ★★		[mm]	144/400	144/400	144/400	144/435	144/435	144/435
C5 ★★		[mm]	170/45	170/45	170/45	220/105	220/105	220/105
C6		[mm]	175	175	175	175	175	175
L1		[mm]	340	340	340	440	440	440
H1		[mm]	100	100	100	110	110	110
H2		[mm]	166	194	194	223	223	253
H3	1~/3~ TP	[mm]	-/587	-/629	-/666	-/724	-/724	-/843
	1~/3~ TPE	[mm]	-	-/628	-/628	-/722	-/746	-/769
H4 ★★★		[mm]						35
M			M16	M16	M16	M16	M16	M16

★ TP, TPD pumps are primarily fitted with IE3 motors. See *Motor data* on page 129.
★★ The dimension before the slash applies to the single-head pump, and the dimension afte he twin-head pump.
★★★ TP, TPE pumps with a H4 dimension are delivered with a base plate. See *Base plates* on pages 259- 261 for base plate dimensions.

TP 50-XX/2

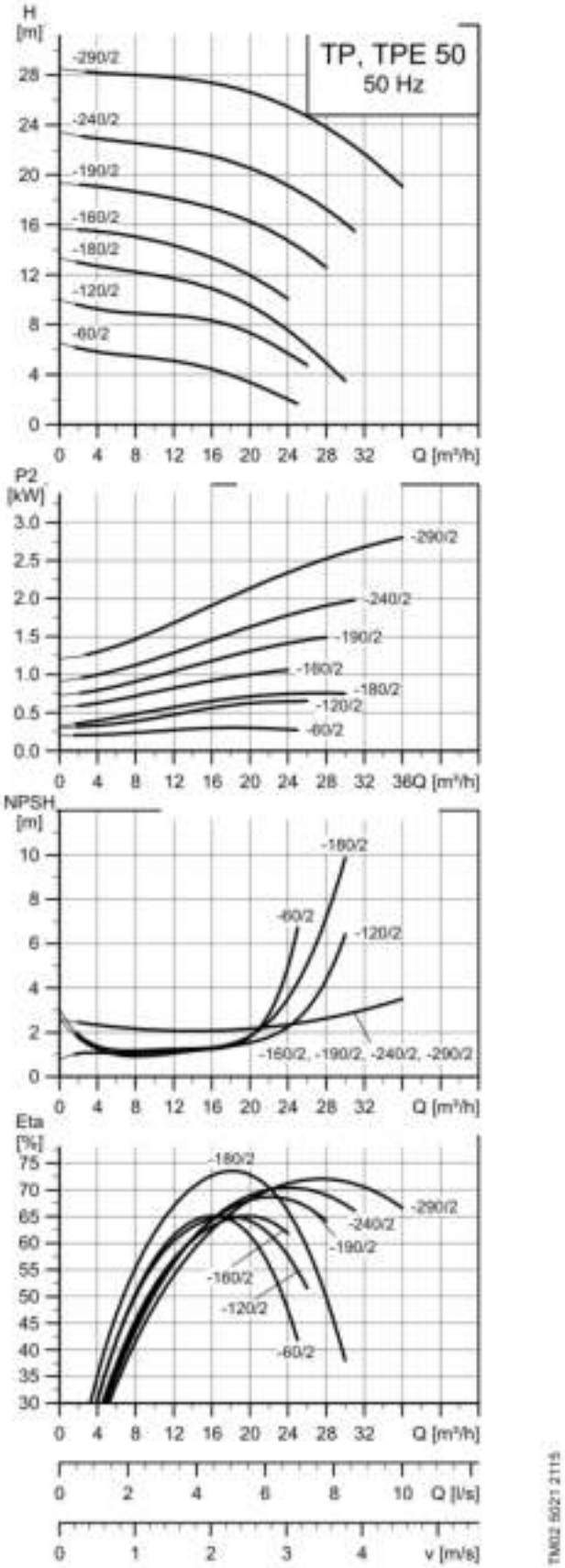

Note: All curves apply to single-head pumps. For further information, see page 167.

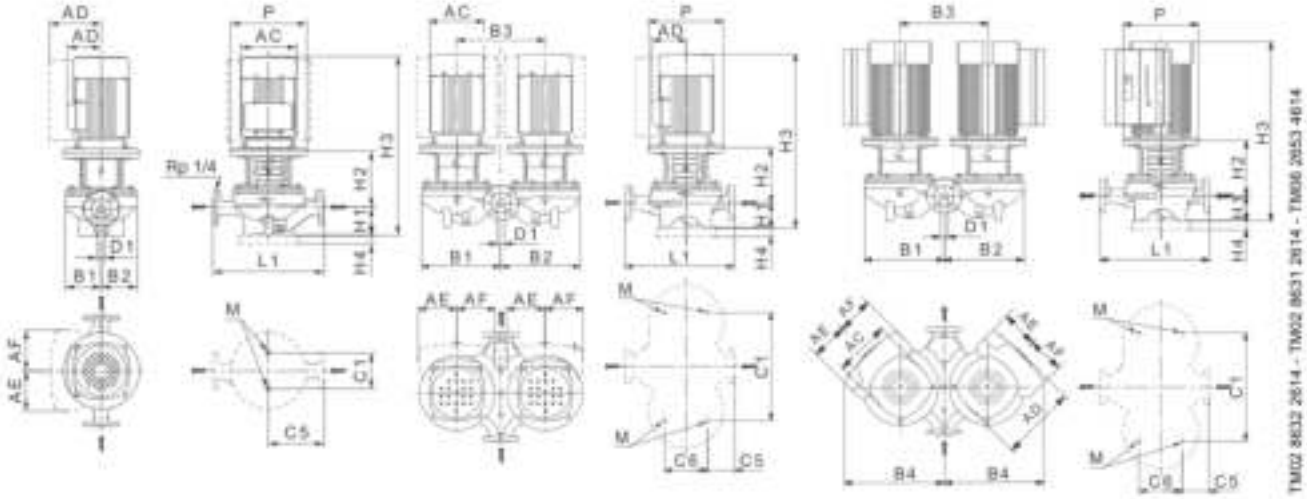

Technical data

			-60/2	-120/2	-180/2	-160/2	-190/2	-240/2	-290/2
TPD			-	-	-	-	-	-	-
[illegible]									-
TPED									-
Series			200	200	200	300	300	300	300
IEC size	[illegible]		[illegible]	80	80				
	[illegible]		[illegible]	80	80	80	90	90	100
	1~ TPE								
	3~ TPE								100
P2	1~/3~ TP ★	[kW]	0.37/0.37	0.75/0.75	0.75/0.75	-/1.1	-/1.5	-/2.2	-/3
	1~/3~ TPE	[kW]	-						-/3
PN			PN 6/10	PN 6/10	PN 6/10	PN 16	PN 16	PN 16	PN 16
T_{min}-T_{max}		[°C]	[-25;140]	[-25;140]	[-25;140]	[-25;120]	[-25;120]	[-25;120]	[-25;120]
D1		[mm]	50	50	50	50	50	[illegible]	[illegible]
AC	1~/3~ TP	[mm]	141/141	141/141	141/141	-/141	-/178	-/178	-/198
	1~/3~ TPE	[mm]	-						-/191
AD	1~/3~ TP	[mm]	133/133	133/133	133/109	-/109	-/110	-/110	-/120
	1~/3~ TPE	[mm]	-						-/201
AE	1~/3~ TPE	[mm]	-						-/146
AF	1~/3~ TPE	[mm]	-						-/146
P		[mm]	105	[illegible]		200	200	200	250
[illegible]		[mm]	90/177	100/221	100/225	117/252	117/252	117/252	117/252
B2 ★★		[mm]	75/188	100/221	100/225	117/252	117/252	117/252	117/252
B3		[mm]	200	240	240	270	270	270	270
[illegible]		[mm]							-/381
[illegible]		[mm]	120/200	120/240	120/240	144/350	144/350	144/350	144/350
C5 ★★		[mm]	140/60	140/60	140/60	170/60	170/60	170/60	170/60
C6		[mm]	125	126	126	175	175	175	175
L1		[mm]	280	280	280	340	340	340	340
H1		[mm]	75	75/61	75	115	115	115	115
H2		[mm]	137	135/141	135	152	152	152	160
H3	1~/3~ TP	[mm]	403/403	441/441	441/441	-/518	-/548	-/588	-/630
	1~/3~ TPE	[mm]	-						-/629
H4 ★★★		[mm]							
M			[illegible]12	M12	M12	M16	M16	M16	M16

★ TP, TPD pumps are primarily fitted with IE3 motors. See *Motor data* on page 129.

★★ The dimension before the slash applies to the single-head pump, and the dimension afte he twin-head pump.

★★★ TP, TPE pumps with a H4 dimension are delivered with a base plate. See *Base plates* on pages 259- 261 for base plate dimensions.

TP 50-XX/2

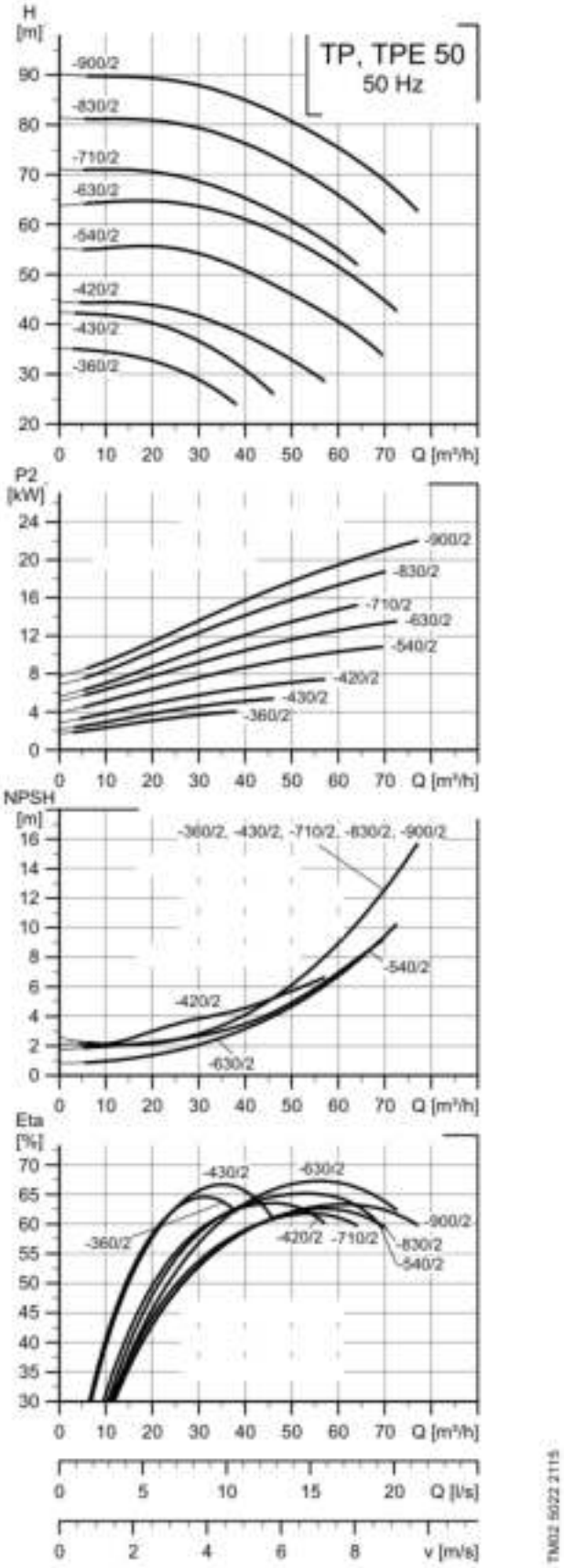

Note: All curves apply to single-head pumps. For further information, see page 167.

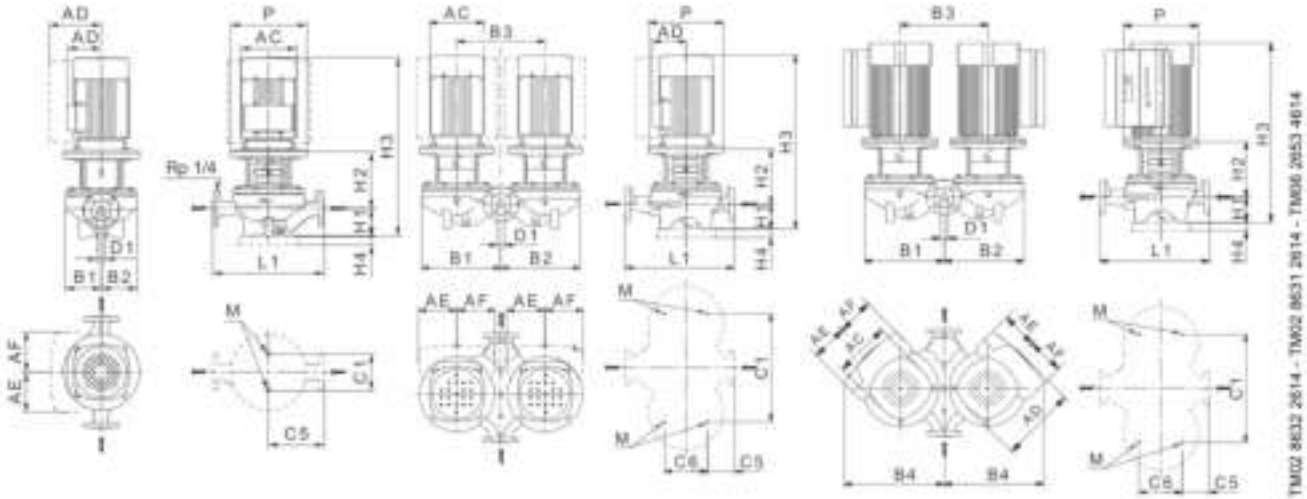

Technical data

TP 50			-360/2	-430/2	-420/2	-540/2	-630/2	-710/2	-830/2	-900/2
TPD			-	-	-	-	-	-	-	-
[illegible]			-	-	-	-	-	-	-	-
TPED			-	-	-	-	-	-	-	-
Series			300	300	300	300	300	300	300	300
IEC size	[illegible]		[illegible]	132	132	160	161	160	160	180
	1~ TPE									
	3~ TPE		[illegible]	132	132	160	161	160	160	180
P2	1~/3~ TP ★	[kW]	-/4	-/5.5	-/7.5	-/11	-/15	-/15	-/18.5	-/22
	1~/3~ TPE	[kW]	-/4	-/5.5	-/7.5	-/11	-/15	-/15	-/18.5	-/22
PN			PN 16	PN 16	PN 16	PN 16	PN 16	PN 16	PN 16	PN 16
T_{min}/T_{max}		[°C]	[-25;120]	[-25;120]	[-25;120]	[-25;120]	[-25;120]	[-25;120]	[-25;120]	[-25;120]
D1		[mm]	50	50	50	50	50	[illegible]	[illegible]	50
AC	1~/3~ TP	[mm]	-/220	-/220	-/260	-/316	-/316	-/316	-/316	-/316
	1~/3~ TPE	[mm]	-/191	-/191	-/255	-/255	-/316	-/316	-/316	-/316
AD	1~/3~ TP	[mm]	-/134	-/134	-/159	-/204	-/204	-/204	-/204	-/204
	1~/3~ TPE	[mm]	-/201	-/201	-/237	-/237	-/308	-/308	-/308	-/308
AE	1~/3~ TPE	[mm]	-/146	-/146	-/173	-/173	-/210	-/210	-/210	-/210
AF	1~/3~ TPE	[mm]	-/146	-/146	-/173	-/173	-/210	-/210	-/210	-/210
P		[mm]	250	300	300	350	350	350	350	350
[illegible]		[mm]	133/290	133/290	162/373	162/373	162/373	180/386	180/386	180/386
B2 ★★		[mm]	119/284	119/284	162/373	162/373	162/373	164/379	164/379	164/379
B3		[mm]	320	320	420	420	420	420	420	420
[illegible]		[mm]	-/406	-/406	-/383	-/501	-/385	-/555	-/555	-/555
[illegible]		[mm]	144/400	144/400	144/500	144/500	144/500	144/500	144/500	144/500
C5 ★★		[mm]	170/52	170/52	220/123	220/123	220/123	220/123	220/123	220/123
C6		[mm]	175	175	175	175	175	175	175	175
L1		[mm]	340	340	440	440	440	440	440	440
H1		[mm]	115	115	115	115	115	115	115	115
H2		[mm]	189	228	227	257	257	264	264	264
H3	1~/3~ TP	[mm]	-/676	-/734	-/721	-/854	-/854	-/861	-/905	-/905
	1~/3~ TPE	[mm]	-/638	-/708	-/738	-/785	-/854	-/861	-/905	-/931
H4 ★★★		[mm]				35	35	[illegible]	[illegible]	35
[illegible]			M16	M16	M16	M16	M16	M16	M16	M16

★ TP, TPD pumps are primarily fitted with IE3 motors. See *Motor data* on page 129.

★★ The dimension before the slash applies to the single-head pump, and the dimension afte he twin-head pump.

★★★ TP, TPE pumps with a H4 dimension are delivered with a base plate. See *Base plates* on pages 259- 261 for base plate dimensions.

TP 65-XX/2

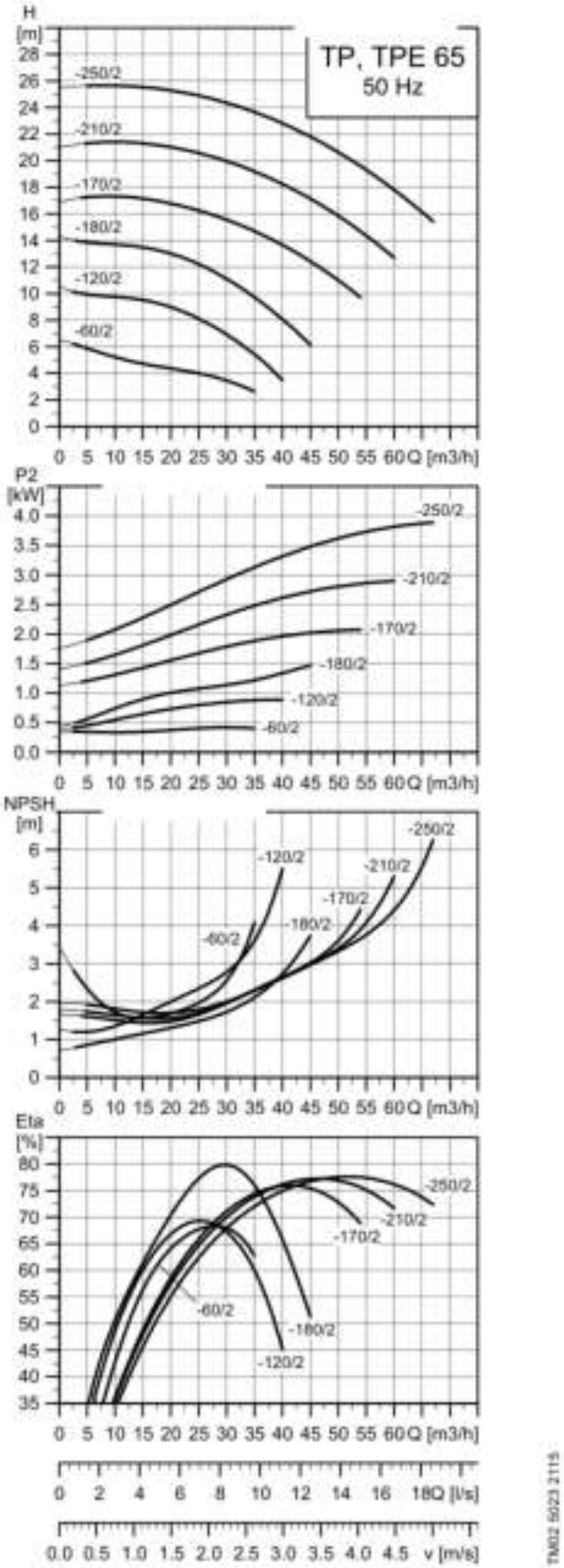

Note: All curves apply to single-head pumps. For further information, see page 167.

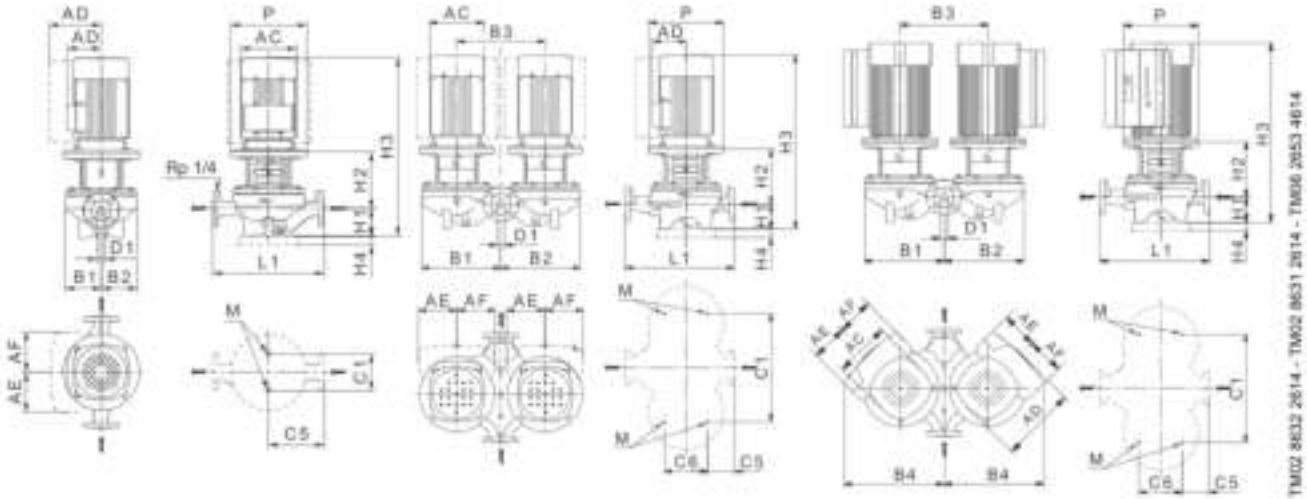

Technical data

TP 65			-60/2	-120/2	-180/2	-170/2	-210/2	-250/2
TPD			-	-	-	-	-	-
[illegible]							-	-
TPED							-	-
Series			200	200	200	300	300	300
IEC size	[illegible]		[illegible]	90	[illegible]			
	3~ TP		[illegible]	80	90	90	100	112
	1~ TPE							
	3~ TPE						100	112
P2	1~/3~ TP ★	[kW]	0.55/0.55	1.1/1.1	1.5/1.5	-/2.2	-/3	-/4
	1~/3~ TPE	[kW]	-				-/3	-/4
PN			PN 6/10	PN 6/10	PN 6/10	PN 16	PN 16	PN 16
T_{min}/T_{max}		[°C]	[-25;140]	[-25;140]	[-25;140]	[-25;120]	[-25;120]	[-25;120]
D1		[mm]	65	65	65	65	65	65
AC	1~/3~ TP	[mm]	141/141	178/141	178/178	-/178	-/198	-/220
	1~/3~ TPE	[mm]	-				-/191	-/191
AD	1~/3~ TP	[mm]	133/109	139/109	139/110	-/110	-/120	-/134
	1~/3~ TPE	[mm]	-				-/201	-/201
AE	1~/3~ TPE	[mm]	-				-/146	-/146
AF	1~/3~ TPE	[mm]	-				-/146	-/146
P		[illegible]				200	250	250
[illegible]		[mm]	93/195	100/225	100/225	134/288	134/288	134/288
B2 ★★		[mm]	93/210	100/225	100/225	122/282	122/282	122/282
B3		[mm]	240	240	240	320	320	320
[illegible]		[illegible]					-/406	-/406
[illegible]		[mm]	120/240	120/240	120/240	144/400	144/400	144/400
C5 ★★		[mm]	170/63	170/63	170/63	180/65	180/65	180/65
C6		[mm]	153	153	153	175	175	175
L1		[mm]	340	340	340	360	360	360
H1		[mm]	82	82	82	105	105	105
H2		[mm]	145	144	154	164	193	193
H3	1~/3~ TP	[mm]	468/418	517/532	557/507	-/590	-/633	-/670
	1~/3~ TPE	[mm]	-				-/631	-/631
H4 ★★★		[illegible]						
[illegible]			M12	M12	M12	M16	M16	M16

★ TP, TPD pumps are primarily fitted with IE3 motors. See *Motor data* on page 129.
★★ The dimension before the slash applies to the single-head pump, and the dimension afte he twin-head pump.
★★★ TP, TPE pumps with a H4 dimension are delivered with a base plate. See *Base plates* on pages 259- 261 for base plate dimensions.

TP 65-XX/2

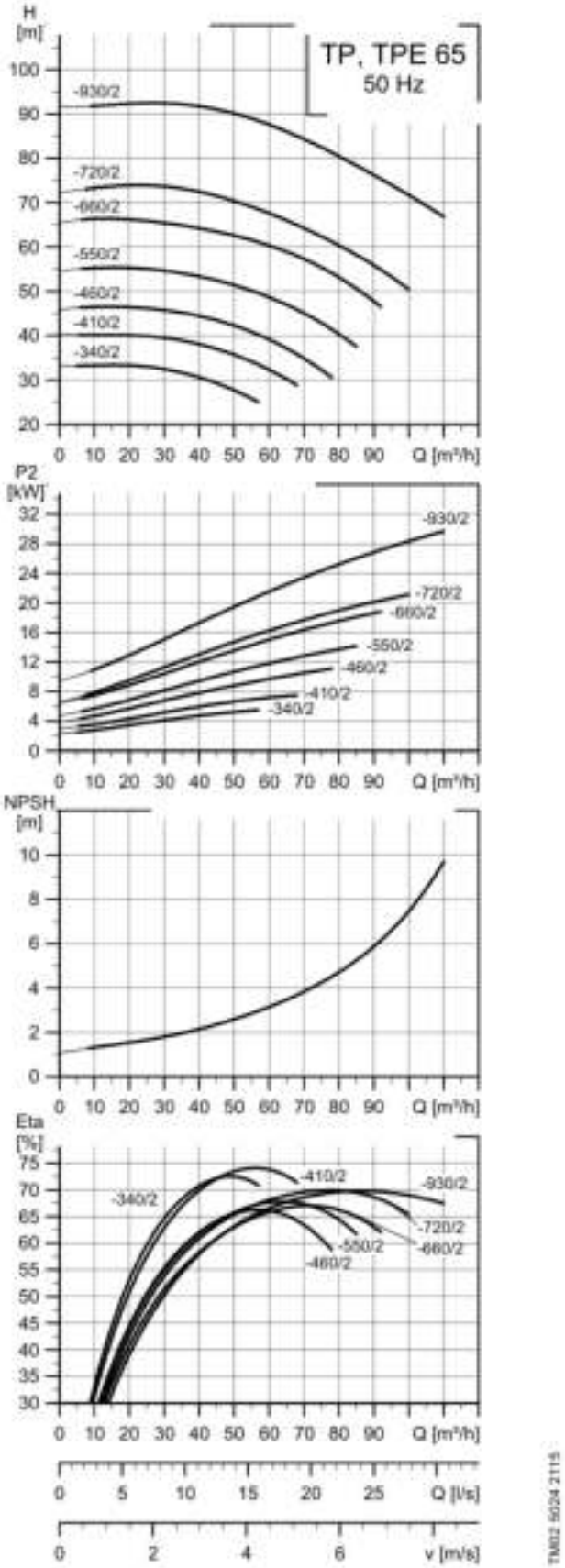

Note: All curves apply to single-head pumps. For further information, see page 167.

DN 80
2-pole, PN 6, 10, 16, 25

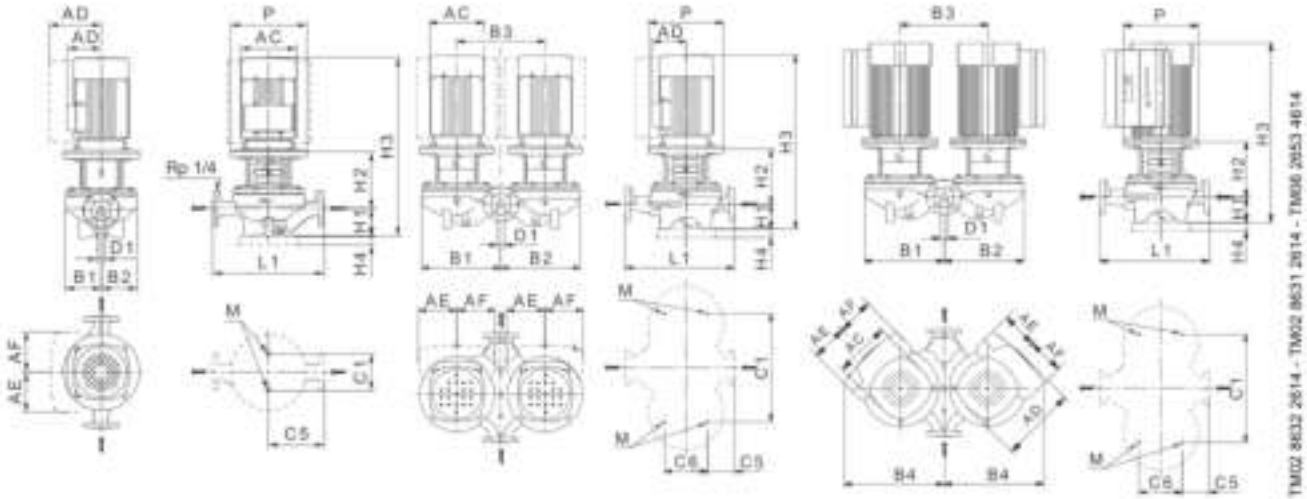

Technical data

TP 65			-340/2	-410/2	-460/2	-550/2	-660/2	-720/2	-930/2
TPD			-	-	-	-	-	-	-
TPE			•	•	•	•	•	•	• ****
TPED			•	•	•	•	•	•	-
Series			300	300	300	300	300	300	300
IEC size	3~ TP		132	132	160	160	160	180	200
	1~ TPE								
	3~ TPE		***	132	160	160	160	180	200
P2	1~/3~ TP ★	[kW]	-/5.5	-/7.5	-/11	-/15	-/18.5	-/22	-/30
	1~/3~ TPE	[kW]	-/5.5	-/7.5	-/11	-/15	-/18.5	-/22	-/30
PN			PN 16	PN 16	PN 16	PN 16	PN 16	PN 16	PN 16
T_{min}-T_{max}		[°C]	[-25;120]	[-25;120]	[-25;120]	[-25;120]	[-25;120]	[-25;120]	[-25;120]
D1		[mm]	65	65	65	65	65	65	65
AC	1~/3~ TP	[mm]	-/220	-/260	-/316	-/316	-/316	-/316	-/407
	1~/3~ TPE	[mm]	-/191	-/255	-/255	-/316	-/316	-/316	-/407
AD	1~/3~ TP	[mm]	-/134	-/159	-/204	-/204	-/204	-/204	-/315
	1~/3~ TPE	[mm]	-/201	-/237	-/237	-/308	-/308	-/308	-/480
AE	1~/3~ TPE	[mm]	-/146	-/173	-/173	-/210	-/210	-/210	-/126
AF	1~/3~ TPE	[mm]	-/146	-/173	-/173	-/210	-/210	-/210	-/126
P		[mm]	300	300	350	350	350	350	400
B1 ★★		[mm]	142/298	142/298	178/349	178/349	178/349	178/349	178/349
B2 ★★		[mm]	124/290	124/290	164/383	164/383	164/383	164/383	164/383
B3		[mm]	320	320	440	440	440	440	440
B4 ★★		[mm]	-/406	-/451	-/511	-/558	-/558	-/558	-
C1 ★★		[mm]	144/400	144/400	144/520	144/520	144/520	144/520	144/520
C5 ★★		[mm]	180/65	180/65	238/111	238/111	238/111	238/111	238/111
C6		[mm]	175	175	175	175	175	175	175
L1		[mm]	360	360	475	475	475	475	475
H1		[mm]	106	106	125	125	125	125	125
H2		[mm]	239	239	263	263	263	263	263
H3	1~/3~ TP	[mm]	-/735	-/723	-/870	-/870	-/914	-/914	-/999
	1~/3~ TPE	[mm]	-/709	-/733	-/794	-/870	-/914	-/940	-/999
H4 ★★★		[mm]			35	35	35	**	**
**			M16	M16	M16	M16	M16	M16	M16

★ TP, TPD pumps are primarily fitted with IE3 motors. See *Motor data* on page 129.

★★ The dimension before the slash applies to the single-head pump, and the dimension afte he twin-head pump.

★★★ TP, TPE pumps with a H4 dimension are delivered with a base plate. See *Base plates* on pages 259- 261 for base plate dimensions.

★★★★ The integrated CUE can be positioned in an angle deviating from this drawing with up to 30 degrees. For further information look in Grundfos Product Center.

TP 80-XX/2

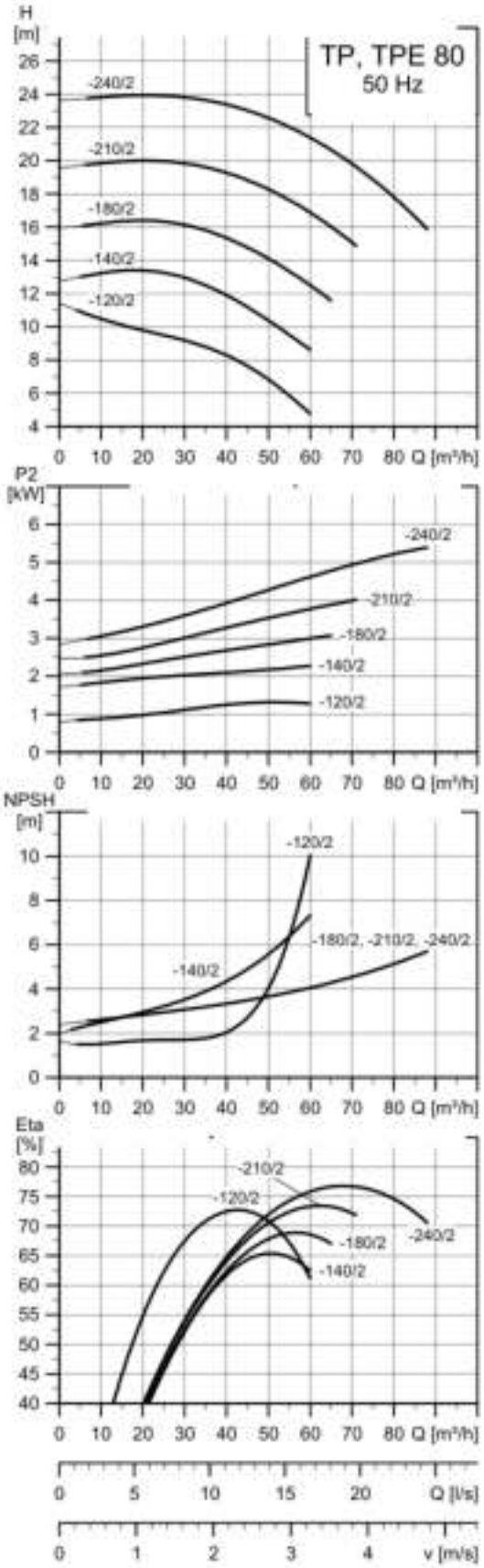

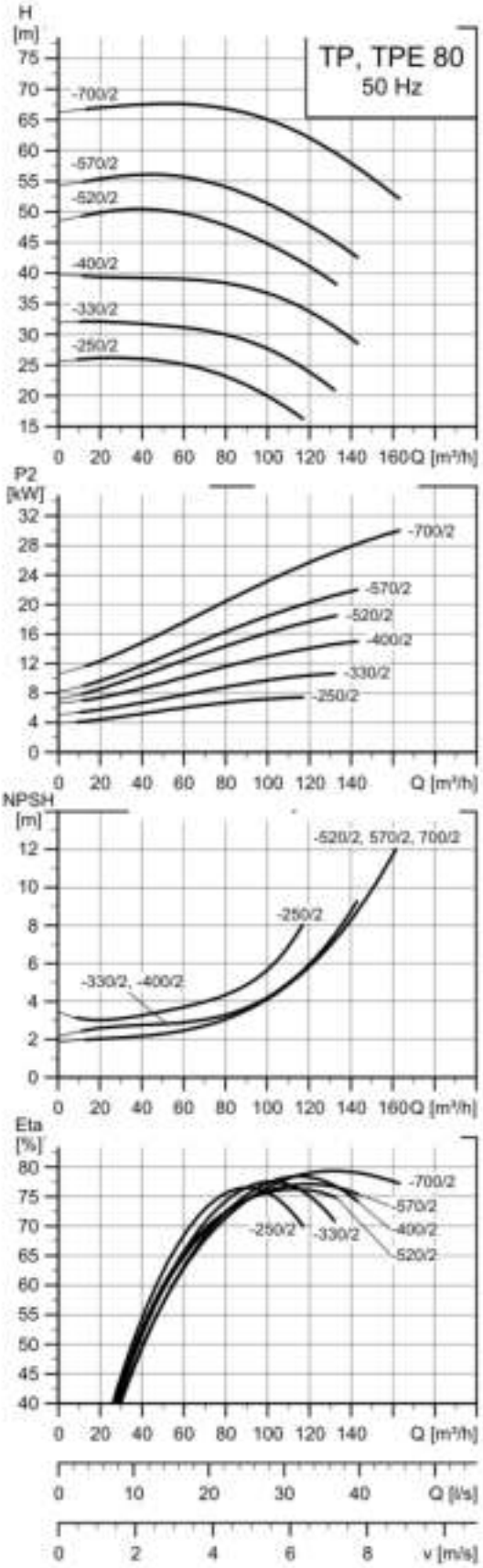

Note: All curves apply to single-head pumps. For further information, see page 167.

DN 100
2-pole, PN 6, 10, 16, 25

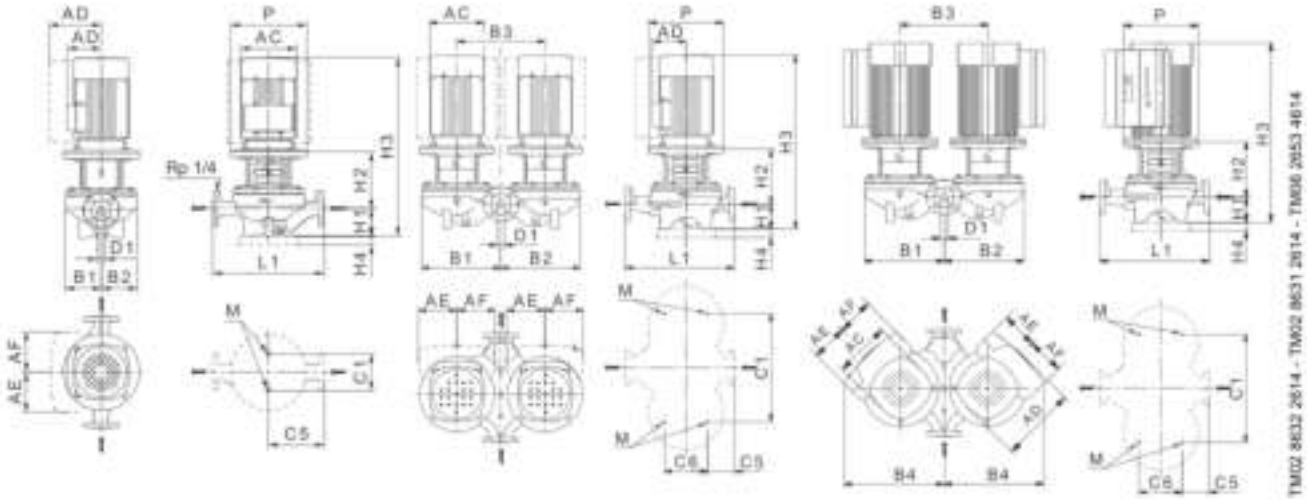

Technical data

TP 80			-120/2	-140/2	-180/2	-210/2	-240/2	-250/2	-330/2	-400/2	-520/2	-570/2	-700/2
TPD			-	-	-	-	-	-	-	-	-	-	-
TPE			-	-	•	•	•	•	•	•	•	•	• ****
TPED					•	•	•	•	•	•	•	•	-
Series			200	300	300	300	300	300	300	300	300	300	300
IEC size	3~ TP		90	90	100	112	132	132	160	160	160	180	200
	1~ TPE												
	3~ TPE			-	100	112	132	132	160	160	160	180	200
P2	1~/3~ TP ★	[kW]	1.5/1.5	-/2.2	-/3	-/4	-/5.5	-/7.5	-/11	-/15	-/18.5	-/22	-/30
	1~/3~ TPE	[kW]			-/3	-/4	-/5.5	-/7.5	-/11	-/15	-/18.5	-/22	-/30
PN			PN 6/10	PN 16	PN 16	PN 16	PN 16	PN 16	PN 16	PN 16	PN 16	PN 16	PN 16
T_{min}-T_{max}		[°C]	[-25;140]	[-25;120]	[-25;120]	[-25;120]	[-25;120]	[-25;120]	[-25;120]	[-25;120]	[-25;120]	[-25;120]	[-25;120]
D1		[mm]	80	80	80	80	80	80	80	80	80	[illegible]	[illegible]
AC	1~/3~ TP	[mm]	178/178	-/178	-/198	-/220	-/220	-/260	-/316	-/316	-/316	-/316	-/402
	1~/3~ TPE	[mm]			-/191	-/191	-/191	-/255	-/255	-/316	-/316	-/316	-/402
AD	1~/3~ TP	[mm]	139/139	-/110	-/120	-/134	-/134	-/159	-/204	-/204	-/204	-/204	-/315
	1~/3~ TPE	[mm]			-/201	-/201	-/201	-/237	-/237	-/308	-/308	-/308	-/470
AE	1~/3~ TPE	[mm]			-/146	-/146	-/146	-/173	-/173	-/210	-/210	-/210	-/126
AF	1~/3~ TPE	[mm]			-/146	-/146	-/146	-/173	-/173	-/210	-/210	-/210	-/126
P		[mm]	135	200	250	250	300	300	350	350	350	350	400
[illegible]		[mm]	120/134	125/296	125/296	125/296	125/296	176/366	176/366	176/366	187/416	187/416	187/416
B2 ★★		[mm]	100/225	119/290	119/290	119/290	119/290	144/354	144/354	144/354	162/405	162/405	162/405
B3		[mm]	240	340	340	340	340	400	400	400	470	470	470
[illegible]		[mm]			-/416	-/416	-/416	-/491	-/491	-/568	-/573	-/573	-
[illegible]		[mm]	160/240	144/420	144/420	144/420	144/420	144/480	144/480	144/480	144/550	144/550	144/550
C5 ★★		[mm]	180/53	180/78	180/78	180/78	180/78	220/93	220/93	220/93	250/133	250/133	250/133
C6		[mm]	173	175	175	175	175	175	175	175	350	350	350
L1		[mm]	360	360	360	360	360	440	440	440	500	500	500
H1		[mm]	97	106	106	106	106	115	115	115	115	115	115
H2		[mm]	163	176	204	204	243	243	273	273	273	273	273
H3	1~/3~ TP	[mm]	581/581	-/602	-/644	-/681	-/739	-/737	-/870	-/870	-/914	-/914	-/999
	1~/3~ TPE	[mm]			-/643	-/643	-/713	-/747	-/794	-/870	-/914	-/940	-/999
H4 ★★★		[mm]							35	35	[illegible]	[illegible]	35
M			[illegible]	M16	M16	M16	M16	M16	M16	M16	M16	M16	M16

★ TP, TPD pumps are primarily fitted with IE3 motors. See *Motor data* on page 129.

★★ The dimension before the slash applies to the single-head pump, and the dimension afte he twin-head pump.

★★★ TP, TPE pumps with a H4 dimension are delivered with a base plate. See *Base plates* on pages 259- 261 for base plate dimensions.

★★★★ The integrated CUE can be positioned in an angle deviating from this drawing with up to 30 degrees. For further information look in Grundfos Product Center.

TP 100-XX/2

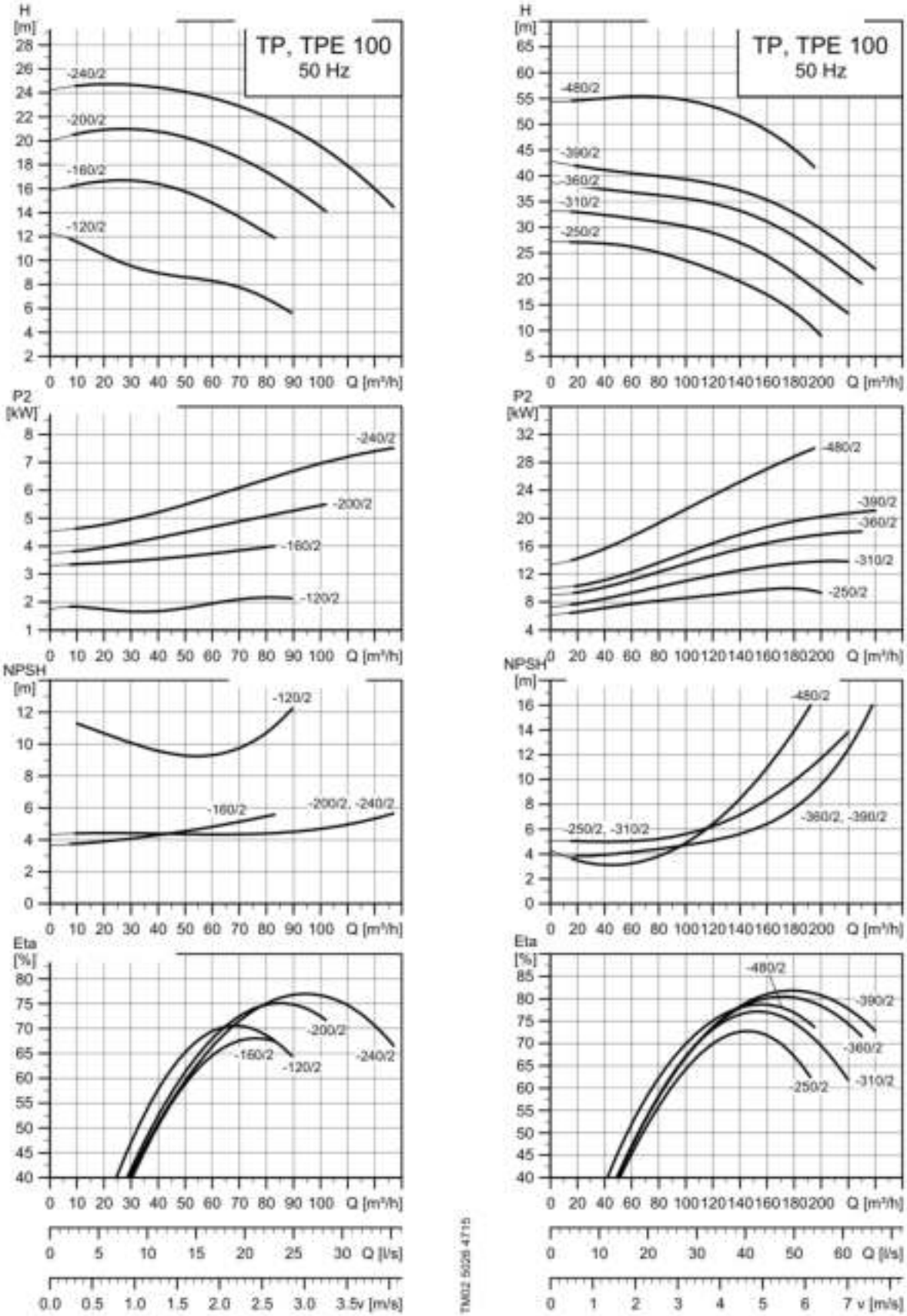

Note: All curves apply to single-head pumps. For further information, see page 167.

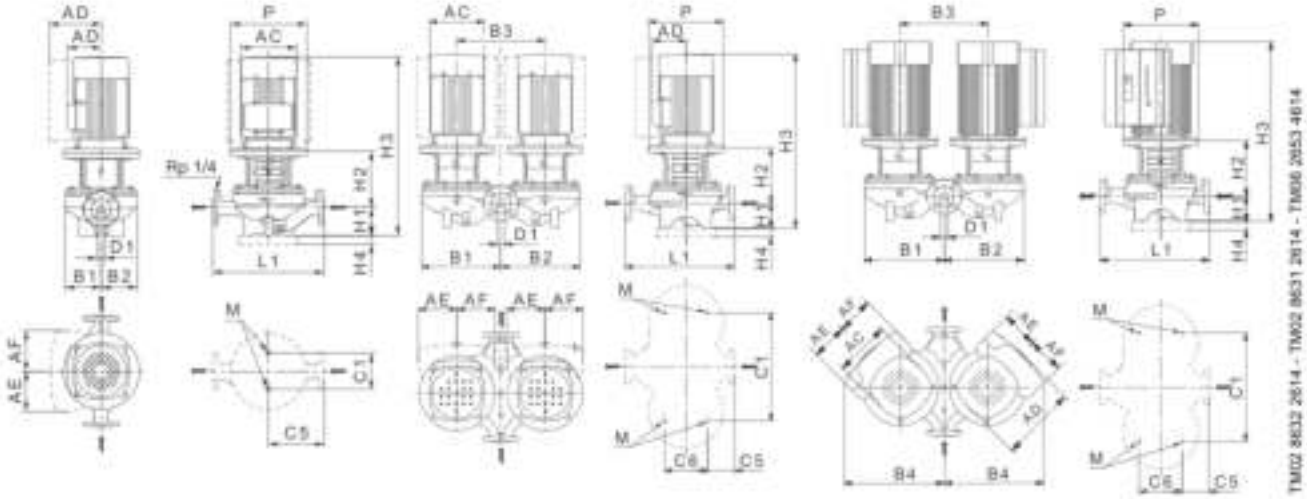

Technical data

TP 100			-120/2	-160/2	-200/2	-240/2	-250/2	-310/2	-360/2	-390/2	-480/2
TPD			-	-	-	-	-	-	-	-	-
TPE			•	•	•	•	•	•	•	•	- ****
TPED			•	•	•	•	•	•	•	•	-
Series			200	300	300	300	300	300	300	300	300
IEC size	3~ TP		90	112	132	132	160	160	160	180	200
	1~ TPE										
	3~ TPE		[illegible]	[illegible]2	132	132	160	160	160	180	200
P2	1~/3~ TP ★	[kW]	-/2.2	-/4	-/5.5	-/7.5	-/11	-/15	-/18.5	-/22	-/30
	1~/3~ TPE	[kW]	-/2.2	-/4	-/5.5	-/7.5	-/11	-/15	-/18.5	-/22	-/30
PN			PN 6/10	PN 16	PN 16	PN 16	PN 16	PN 16	PN 16	PN 16	PN 16
T_{min}-T_{max}		[°C]	[-25;140]	[-25;120]	[-25;120]	[-25;120]	[-25;120]	[-25;120]	[-25;120]	[-25;120]	[-25;120]
D1		[mm]	100	100	100	100	100	100	100	100	100
AC	1~/3~ TP	[mm]	-/178	-/220	-/220	-/260	-/316	-/316	-/316	-/316	-/407
	1~/3~ TPE	[mm]	-/122	-/191	-/191	-/255	-/255	-/316	-/316	-/316	-/407
AD	1~/3~ TP	[mm]	-/110	-/134	-/134	-/159	-/204	-/204	-/204	-/204	-/315
	1~/3~ TPE	[mm]	-/158	-/201	-/201	-/237	-/237	-/308	-/308	-/308	-/470
AE	1~/3~ TPE	[mm]	-/134	-/146	-/146	-/173	-/173	-/210	-/210	-/210	-/126
AF	1~/3~ TPE	[mm]	-/134	-/146	-/146	-/173	-/173	-/210	-/210	-/210	-/126
P		[mm]		250	300	300	350	350	350	350	400
[illegible]		[mm]	125/245	156/347	156/347	156/347	190/414	190/414	190/414	190/414	201/443
B2 ★★		[mm]	100/265	124/332	124/332	124/332	151/395	151/395	151/395	151/395	173/429
B3		[mm]	280	470	470	470	470	500	500	500	500
[illegible]		[mm]	-/340	-/481	-/481	-/526	-/541	-			
[illegible]		[mm]	160/280	144/480	144/480	144/480	230/550	230/550	230/550	230/550	230/550
C5 ★★		[mm]	225/83	250/104	250/104	250/104	275/110	275/110	275/110	275/110	275/110
C6		[mm]	221	175	175	175	230	230	230	230	230
L1		[mm]	450	500	500	500	550	550	550	550	550
H1		[mm]	107	140	140	140	140	140	140	140	140
H2		[mm]	185	206	245	245	270	270	270	270	307
H3	1~/3~ TP	[mm]	-/613	-/718	-/776	-/764	-/892	-/892	-/936	-/936	-/1058
	1~/3~ TPE	[mm]	-/566	-/680	-/750	-/774	-/816	-/892	-/936	-/962	-/1058
H4 ★★★		[mm]					35	[illegible]	[illegible]	35	35
M			M16	M16	M16	M16	M16	M16	M16	M16	M16

★ TP, TPD pumps are primarily fitted with IE3 motors. See *Motor data* on page 129.

★★ The dimension before the slash applies to the single-head pump, and the dimension afte[illegible] he twin-head pump.

★★★ TP, TPE pumps with a H4 dimension are delivered with a base plate. See *Base plates* on pages 259- 261 for base plate dimensions.

★★★★ The integrated CUE can be positioned in an angle deviating from this drawing with up to 30 degrees. For further information look in Grundfos Product Center.

TP 100-XX/2

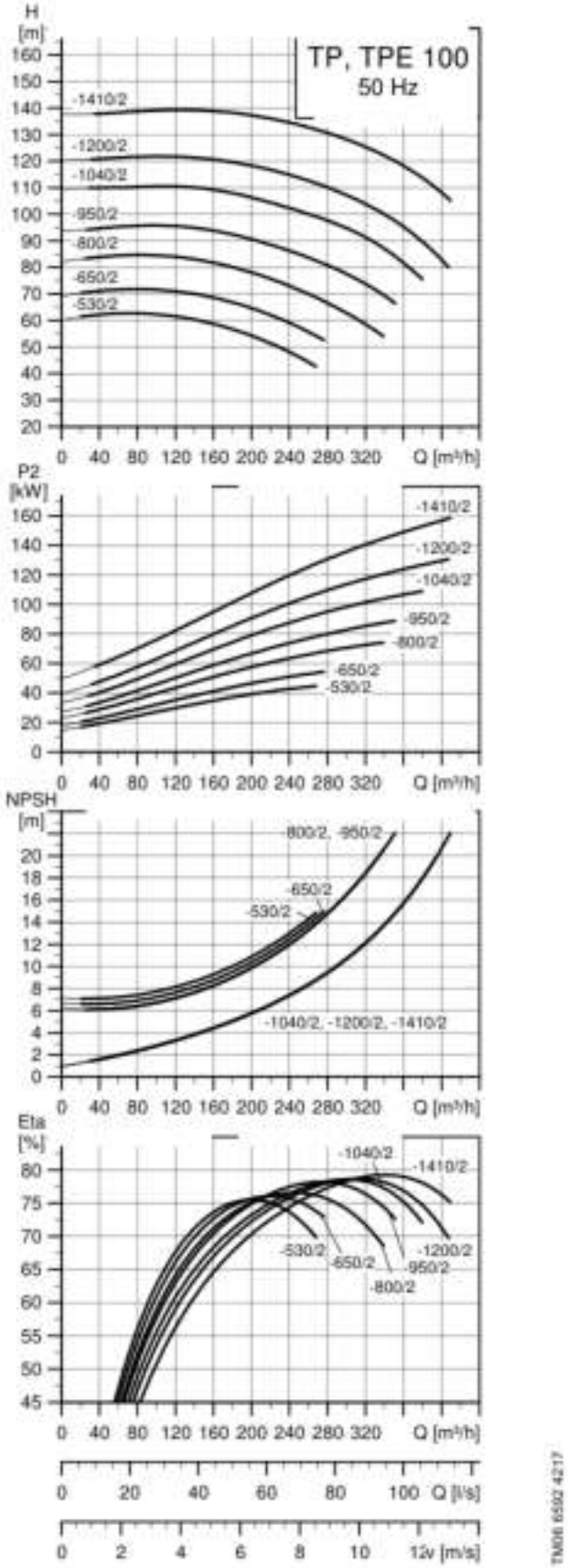

Note: All curves apply to single-head pumps. For further information, see page 167.

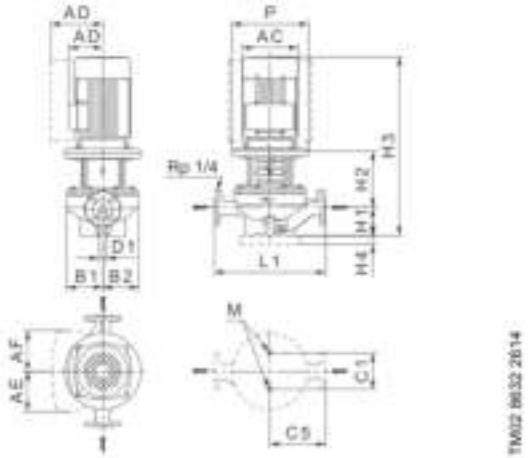

Technical data

TP 100			-530/2	-650/2	-800/2	-950/2	-1040/2	-1200/2	-1410/2
TPD									—
TPE			●****	●****	-	-	-	-	-
TPED				-	-	-	-	-	-
Series			300	300	300	300	300	300	300
IEC size	1~ TP								—
	3~ TP		250	250	280	280	315	315	315
	1~ TPE			-					
	3~ TPE		250	250	-				—
P2	1~/3~ TP ★	[kW]	-/45	-/55	-/75	-/90	-/110	-/132	-/160
	1~/3~ TPE	[kW]	-/45	-/55	-	-	-	-	-
PN			PN25	PN25	PN25	PN25	PN25	PN25	PN25
T_{min};T_{max}		[°C]	[-40;150]	[-40;150]	[-40;150]	[-40;150]	[-40;150]	[-40;150]	[-40;150]
D1		[mm]	100	100	100	100	100	100	100
AC	1~/3~ TP	[mm]	-/442	-/495	-/555	-/555	-/610	-/610	-/610
	1~/3~ TPE	[mm]	-/442	-/495					
AD	1~/3~ TP	[mm]	-/325	-/392	-/432	-/432	-/495	-/495	-/495
	1~/3~ TPE	[mm]	-/558	-/604	-				—
AE	1~/3~ TPE	[mm]	-/159	-/159					
AF	1~/3~ TPE	[mm]	-/159	-/159	-				—
P		[mm]	450	550	550	550	660	660	660
B1 ★★		[mm]	281/-	281/-	281/-	281/-	281/-	281/-	281/-
B2 ★★		[mm]	246/-	246/-	246/-	246/-	246/-	246/-	246/-
B3		[mm]							
B4 ★★		[mm]							—
B5 ★★		[mm]	230/-	230/-	230/-	230/-	230/-	230/-	230/-
C5 ★★		[mm]	335/-	335/-	335/-	335/-	335/-	335/-	335/-
C6		[mm]							
L1		[mm]	670	670	670	670	670	670	670
H1		[mm]	175	175	175	175	175	175	175
H2		[mm]	333	338	338	338	366	366	366
H3	1~/3~ TP	[mm]	-/1220	-/1330	-/1333	-/1443	-/1473	-/1633	-/1633
	1~/3~ TPE	[mm]	-/1220	-/1330					
H4 ★★★		[mm]	35	35	35	35	35	35	35
M			**16	M16	M16	M16	M16	M16	M16

★ TP, TPD pumps are primarily fitted with IE3 motors. See *Motor data* on page 129.

★★ The dimension before the slash applies to the single-head pump, and the dimension afte he twin-head pump.

★★★ TP, TPE pumps with a H4 dimension are delivered with a base plate. See *Base plates* on pages 259- 261 for base plate dimensions.

**** The integrated CUE can be positioned in an angle deviating from this drawing with up to 30 degrees. For further information look in Grundfos Product Center.

TP 125-XX/2

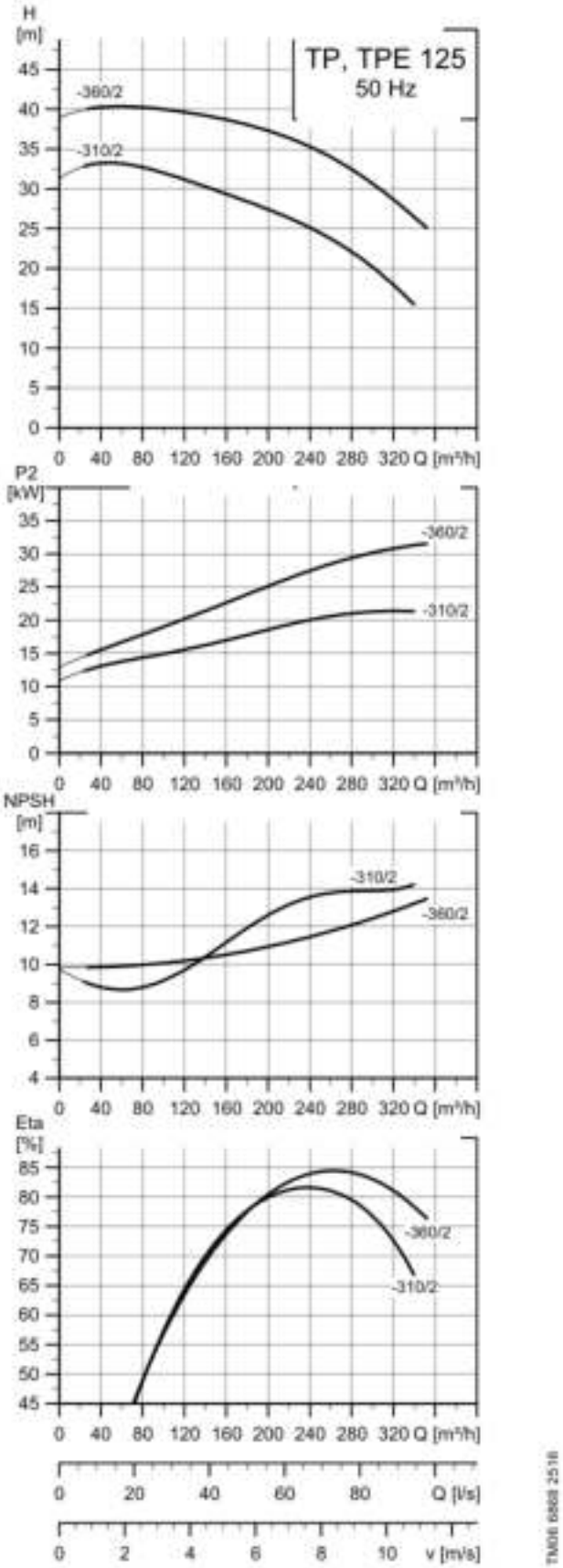
TP, TPE 125
50 Hz
H [m]
-360/2
-310/2
P2 [kW]
NPSH [m]
Eta [%]
0 40 80 120 160 200 240 280 320 Q [m³/h]
0 20 40 60 80 Q [l/s]
0 2 4 6 8 10 v [m/s]
TM06 6868 2516

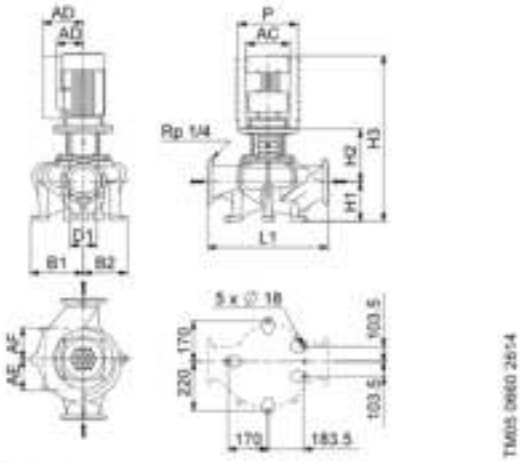

Technical data

TP 125			-310/2	-360/2
TPD				-
TPE			•	• ★★★
TPED				-
Series			300	300
IEC size	[illegible]		[illegible]	-
	[illegible]		[illegible]	100
	1~ TPE			-
	3~ TPE		[illegible]	100
P2	1~/3~ TP ★	[kW]	-/22	-/30
	1~/3~ TPE	[kW]	-/22	-/30
PN			PN 16	PN 16
T_{min}-T_{max}		[°C]	[-25;120]	[-25;120]
D1		[mm]	125	125
AC	1~/3~ TP	[mm]	-/314	-/407
	1~/3~ TPE	[mm]	-/314	-/407
AD	1~/3~ TP	[mm]	-/204	-/315
	1~/3~ TPE	[mm]	-/308	-/462
AE	1~/3~ TPE	[mm]	-/210	-/126
AF	1~/3~ TPE	[mm]	-/210	-/126
P		[mm]	350	400
B1 ★★		[mm]	243/-	243/-
B2 ★★		[mm]	193/-	193/-
B3		[mm]	-	-
L1		[mm]	620	620
H1		[mm]	210	210
H2		[mm]	275	275
H3	1~/3~ TP	[mm]	-/1065	-/1145
	1~/3~ TPE	[mm]	-/1091	-/1145

★ TP, TPD pumps are primarily fitted with IE3 motors. See *Motor data* on page 129.

★★ The dimension before the slash applies to the single-head pump, and the dimension afte he twin-head pump.

★★★ The integrated CUE can be positioned in an angle deviating from this drawing with up to 30 degrees. For further information look in Grundfos Product Center.

TP, TPD, TPE, TPED, 4-pole, PN 6, 10, 16, 25

TP, TPD, TPE, TPED, 32-XXX/4

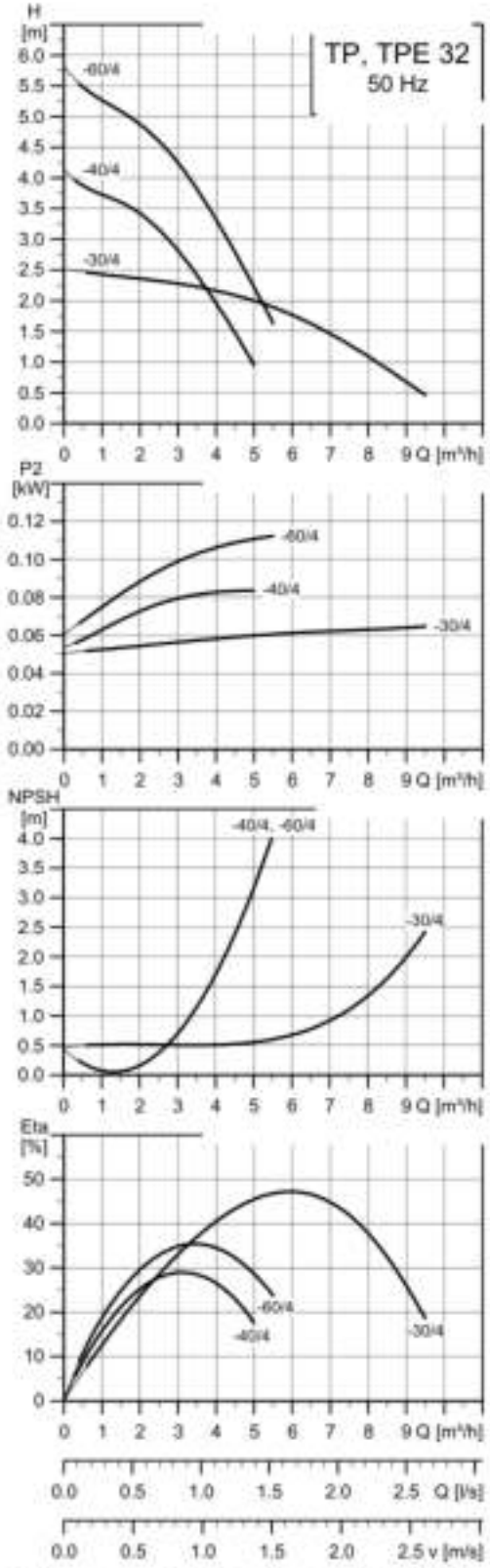

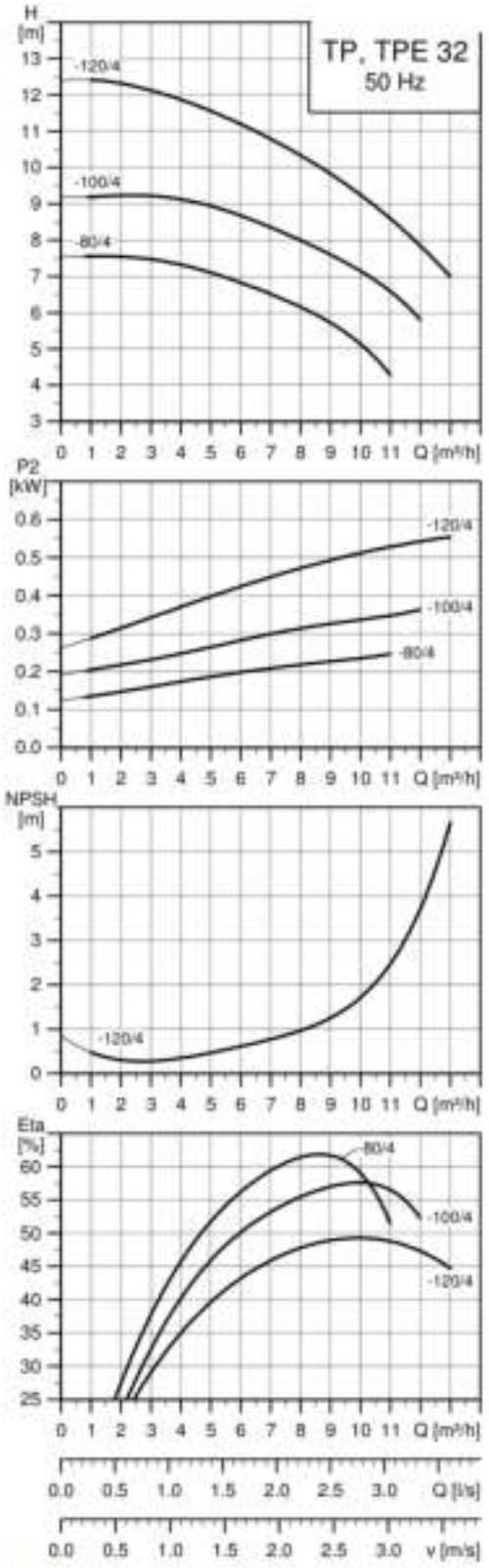

Note: All curves apply to single-head pumps. For further information, see page 167.

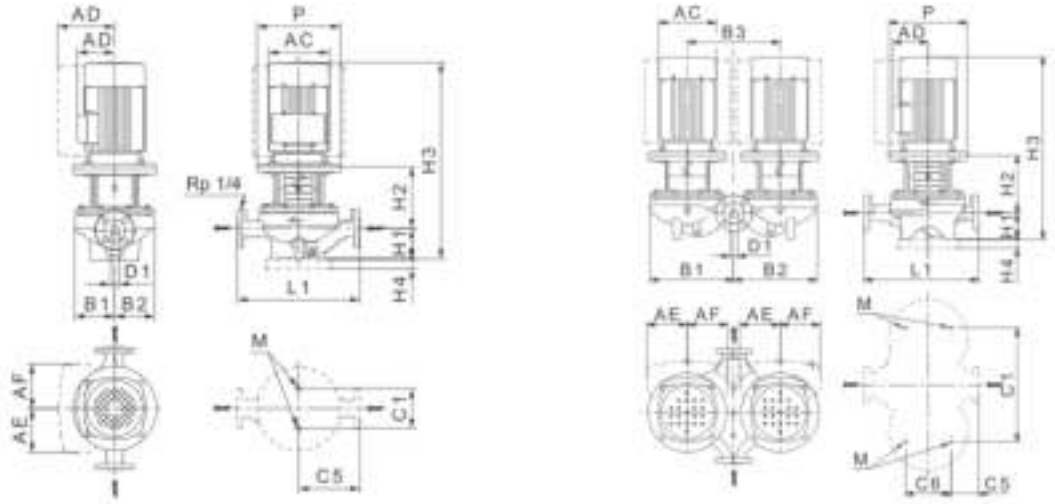

TM02 8632 2814 - TM02 8631 2814

Technical data

TP 32			-30/4	-40/4	-60/4	-80/4	-100/4	-120/4
TPD			★	★	★	★	★	★
TPE								—
TPED				-	-	-	-	-
Series			200	200	200	300	300	300
IEC size	1~ TP		[illegible]	[illegible]	[illegible]			
	3~ TP		[illegible]	[illegible]	[illegible]	[illegible]	[illegible]	[illegible]
	1~ TPE							
	3~ TPE							
P2	1~/3~ TP ★	[kW]	0.12/0.12	0.25/0.25	0.25/0.25	-/0.25	-/0.37	-/0.55
	1~/3~ TPE	[kW]	-	-	-	-	-	-
PN			PN 6/10	PN 6/10	PN 6/10	PN 16	PN 16	PN 16
T_{min}/T_{max}		[°C]	[-25;140]	[-25;140]	[-25;140]	[-25;120]	[-25;120]	[-25;120]
D1		[mm]	32	32	[illegible]	[illegible]	[illegible]	[illegible]
AC	1~/3~ TP	[mm]	141/118	141/141	141/141	-/141	-/141	-/141
	1~/3~ TPE	[mm]	-	-	-	-	-	-
AD	1~/3~ TP	[mm]	133/101	133/133	133/133	-/109	-/109	-/109
	1~/3~ TPE	[mm]	-		-			
AE	1~/3~ TPE	[mm]	-					
AF	1~/3~ TPE	[mm]	-		-	-	-	-
P		[mm]	-	105	-	170	170	200
B1 ★★		[mm]	75/180	100/222	100/222	125/260	125/260	144/321
B2 ★★		[mm]	75/180	100/222	100/222	117/257	117/257	144/321
B3		[mm]	200	240	240	276	276	355
C1 ★★		[mm]	80/200	80/240	80/240	144/356	144/356	144/435
C5 ★★		[mm]	110/52	140/82	140/82	170/45	170/45	220/46
C6		[mm]	103	103	103	175	175	175
L1		[mm]	220	280	280	340	340	440
H1		[mm]	68	79	79	100	100	100
H2		[mm]	142	125	125	129	129	156
H3	1~/3~ TP	[mm]	401/390	395/395	395/395	-/420	-/420	-/487
	1~/3~ TPE	[mm]	-					—
H4 ★★★		[mm]						—
M			[illegible]	M12	M12	M16	M16	M16

★ TP, TPD pumps are primarily fitted with IE3 motors. See *Motor data* on page 129.

★★ The dimension before the slash applies to the single-head pump, and the dimension afte he twin-head pump.

★★★ TP, TPE pumps with a H4 dimension are delivered with a base plate. See *Base plates* on pages 259- 261 for base plate dimensions.

TP 40-XXX/4

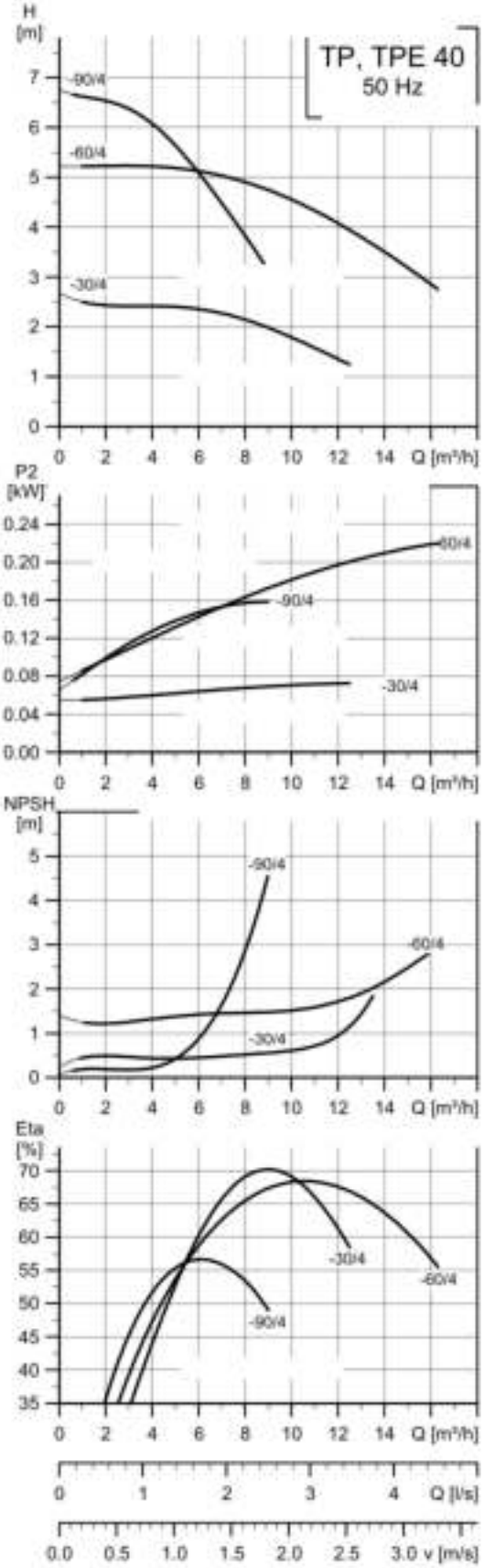

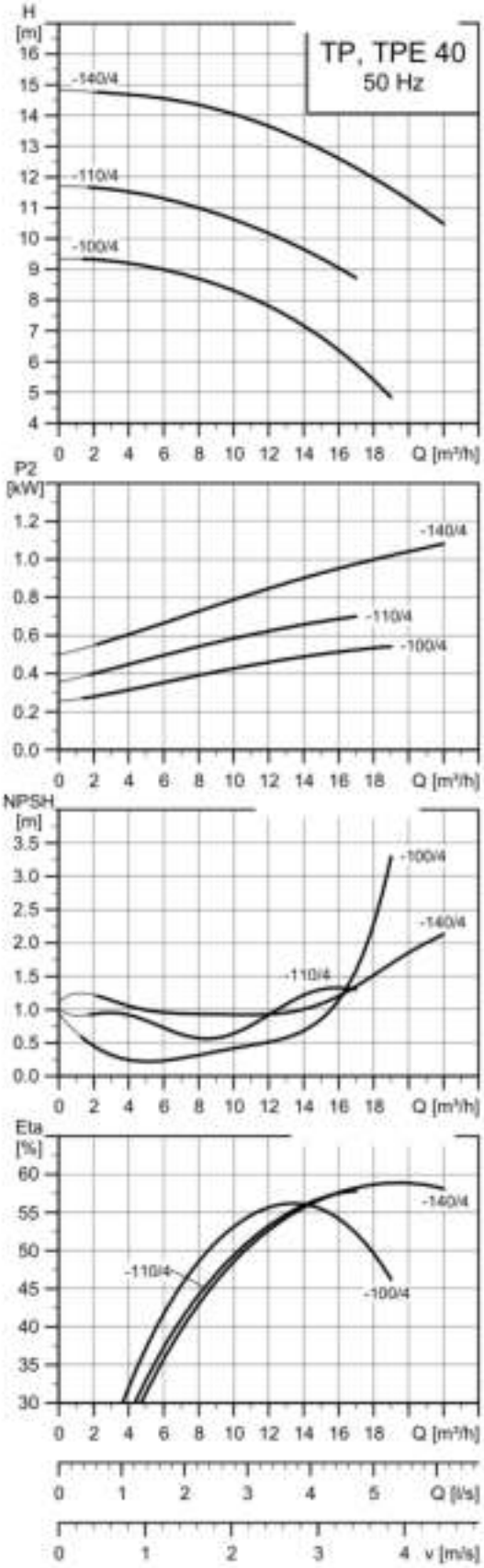

Note: All curves apply to single-head pumps. For further information, see page 167.

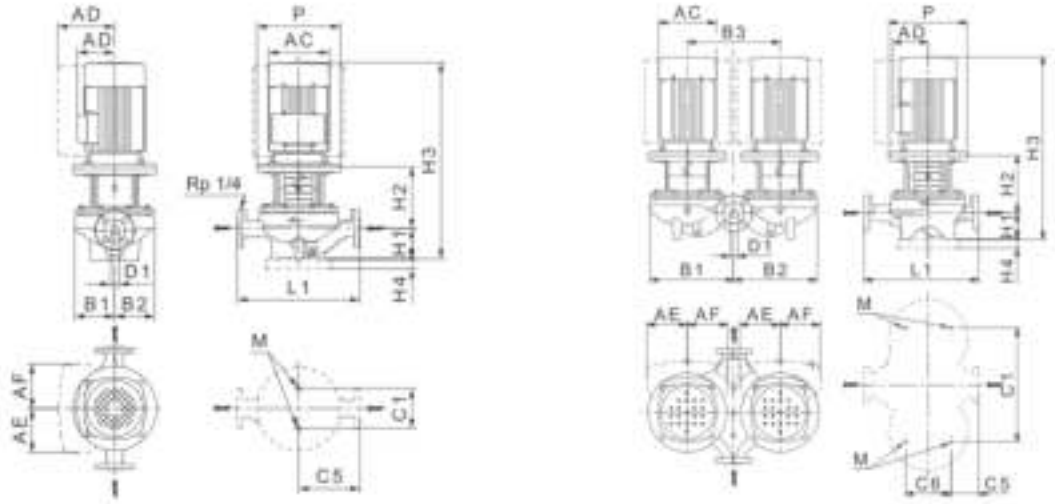

TM02 8632 2814 - TM02 8631 2814

Technical data

TP 40			-30/4	-60/4	-90/4	-100/4	-110/4	-140/4
TPD			★		★	★	★	★
TPE								
TPED				-	-	-	-	-
Series			200	200	200	300	300	300
IEC size	1~ TP		[illegible]	[illegible]	[illegible]			
	3~ TP		[illegible]	[illegible]	[illegible]	[illegible]	80	90
	1~ TPE							
	3~ TPE							
P2	1~/3~ TP ★	[kW]	0.12/0.12	0.25/0.25	0.25/0.25	-/0.55	-/0.75	-/1.1
	1~/3~ TPE	[kW]	-	-	-	-	-	-
PN			PN 6/10	PN 6/10	PN 16	PN 16	PN 16	PN 16
T_{min}/T_{max}		[°C]	[-25;140]	[-25;140]	[-25;140]	[-25;120]	[-25;120]	[-25;120]
D1		[mm]	40	40	40	40	40	40
AC	1~/3~ TP	[mm]	141/118	141/141	141/141	-/141	-/178	-/178
	1~/3~ TPE	[mm]	-	-	-	-		
AD	1~/3~ TP	[mm]	133/101	133/109	133/133	-/109	-/110	-/110
	1~/3~ TPE	[mm]	-					
AE	1~/3~ TPE	[mm]	-					
AF	1~/3~ TPE	[mm]	-		-	-	-	-
P		[mm]	-	-	105	200	200	200
B1 ★★		[mm]	85/180	100/-	100/222	130/273	150/325	150/325
B2 ★★		[mm]	75/180	100/-	100/222	117/267	147/325	147/325
B3		[mm]	200	-	240	290	355	355
C1 ★★		[mm]	120/200	120/-	120/240	144/400	144/435	144/435
C5 ★★		[mm]	125/45	125/-	160/95	170/45	220/108	220/108
C6		[mm]	125	-	125	175	175	175
L1		[mm]	250	250	320	340	440	440
H1		[mm]	67	75	68/79	100	110	110
H2		[mm]	146	123	128	166	156	156
H3	1~/3~ TP	[mm]	404/393	389/389	388/398	-/497	-/547	-/587
	1~/3~ TPE	[mm]	-					—
H4 ★★★		[mm]						—
M			[illegible]	M12	M12	M16	M16	M16

★ TP, TPD pumps are primarily fitted with IE3 motors. See *Motor data* on page 129.

★★ The dimension before the slash applies to the single-head pump, and the dimension afte he twin-head pump.

★★★ TP, TPE pumps with a H4 dimension are delivered with a base plate. See *Base plates* on pages 259- 261 for base plate dimensions.

TP 50-XXX/4

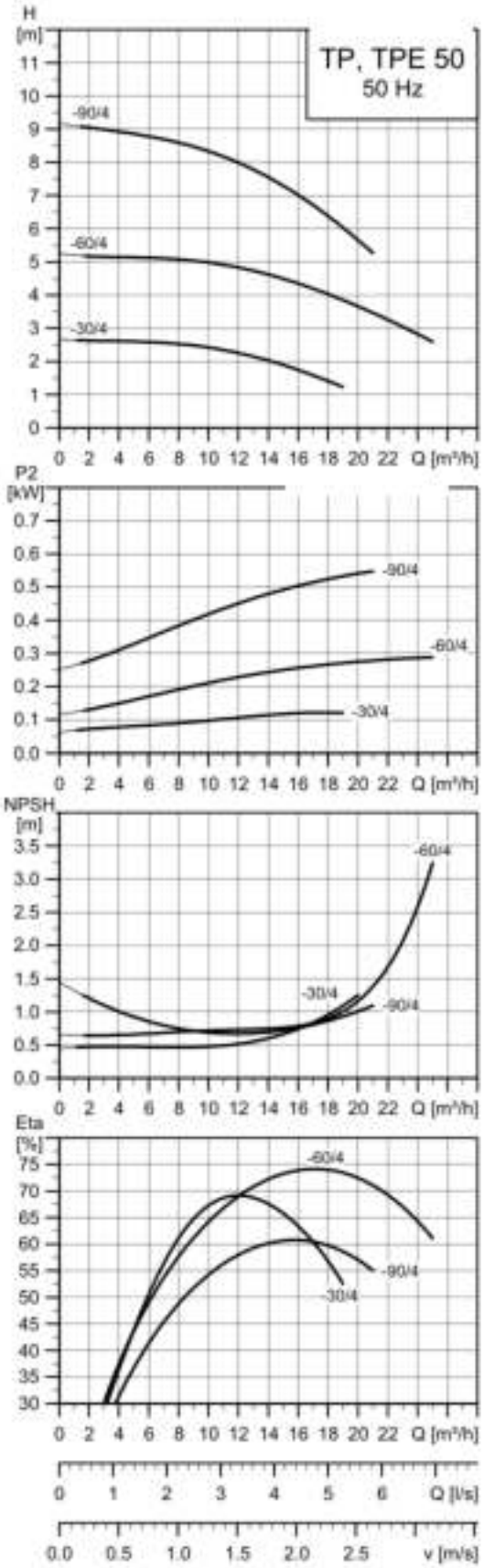

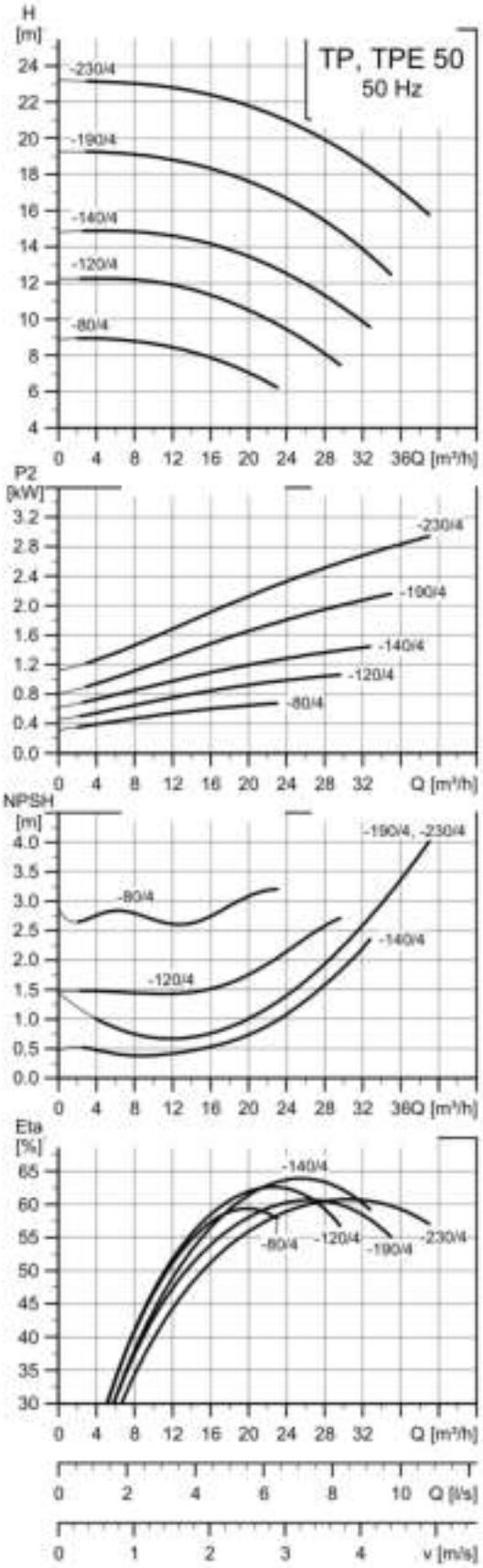

Note: All curves apply to single-head pumps. For further information, see page 167.

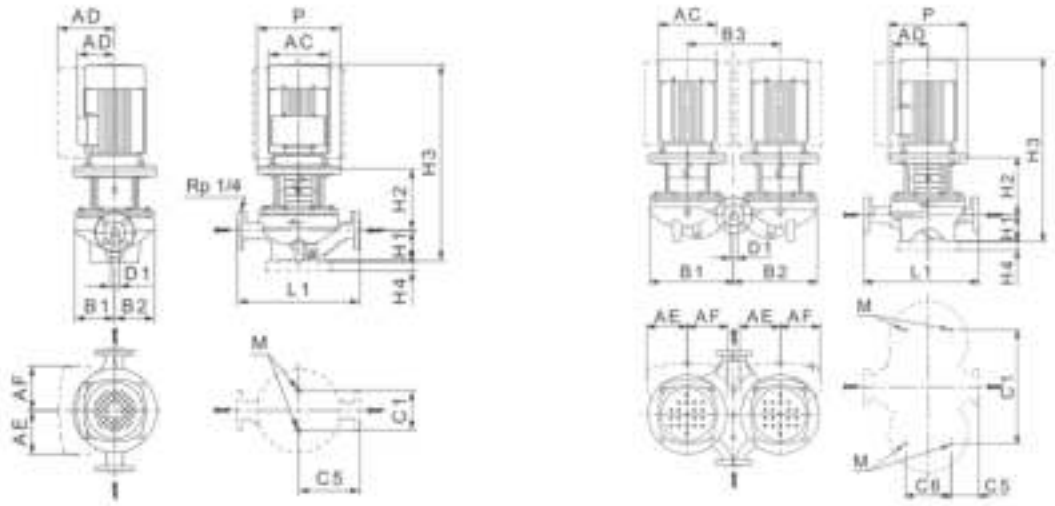

TM02 8632 2814 - TM02 8631 2814

Technical data

TP 50			-30/4	-60/4	-90/4	-80/4	-120/4	-140/4	-190/4	-230/4
TPD			●	●	●	●	●	●	●	●
TPE					–					–
TPED				-	-	-	-	-	-	-
Series			200	200	300	300	300	300	300	300
IEC size	1~ TP		71	80						
	3~ TP		71	71	80	80	90	90	100	100
	1~ TPE							-		
	3~ TPE									
P2	1~/3~ TP ★	[kW]	0.25/0.25	0.37/0.37	-/0.55	-/0.75	-/1.1	-/1.5	-/2.2	-/3
	1~/3~ TPE	[kW]	-	-	-	-	-	-	-	-
PN			PN 6/10	PN 6/10	PN 16	PN 16	PN 16	PN 16	PN 16	PN 16
T_{min}/T_{max}		[°C]	[-25;140]	[-25;140]	[-25;120]	[-25;120]	[-25;120]	[-25;120]	[-25;120]	[-25;120]
D1		[mm]	50	50	50	50	50	50	50	50
AC	1~/3~ TP	[mm]	141/142	141/141	-/141	-/178	-/178	-/178	-/198	-/198
	1~/3~ TPE	[mm]	-	-	-	-	-	-	-	-
AD	1~/3~ TP	[mm]	133/133	133/109	-/109	-/110	-/110	-/110	-/120	-/120
	1~/3~ TPE	[mm]	-		–					
AE	1~/3~ TPE	[mm]	-							
AF	1~/3~ TPE	[mm]			-	-	-	-	-	-
P		[mm]	-	-	200	200	200	200	250	250
B1 ★★		[mm]	75/181	110/225	133/290	162/373	162/373	162/373	180/386	180/386
B2 ★★		[mm]	90/186	100/225	119/284	162/373	162/373	162/373	164/379	164/379
B3		[mm]	200	240	320	420	420	420	420	420
C1 ★★		[mm]	120/200	120/240	144/400	144/500	144/500	144/500	144/500	144/500
C5 ★★		[mm]	140/60	140/60	170/52	220/123	220/123	220/123	220/123	220/123
C6		[mm]	125	125	175	175	175	175	175	175
L1		[mm]	280	280	340	440	440	440	440	440
H1		[mm]	82/90	82	115	115	115	115	115	115
H2		[mm]	135	127	161	160	160	160	195	195
H3	1~/3~ TP	[mm]	408/416	452/400	-/507	-/546	-/596	-/596	-/645	-/645
	1~/3~ TPE	[mm]	-							–
H4 ★★★		[mm]								–
M			M12	M12	M16	M16	M16	M16	M16	M16

★ TP, TPD pumps are primarily fitted with IE3 motors. See *Motor data* on page 129.

★★ The dimension before the slash applies to the single-head pump, and the dimension afte he twin-head pump.

★★★ TP, TPE pumps with a H4 dimension are delivered with a base plate. See *Base plates* on pages 259- 261 for base plate dimensions.

TP 65-XXX/4

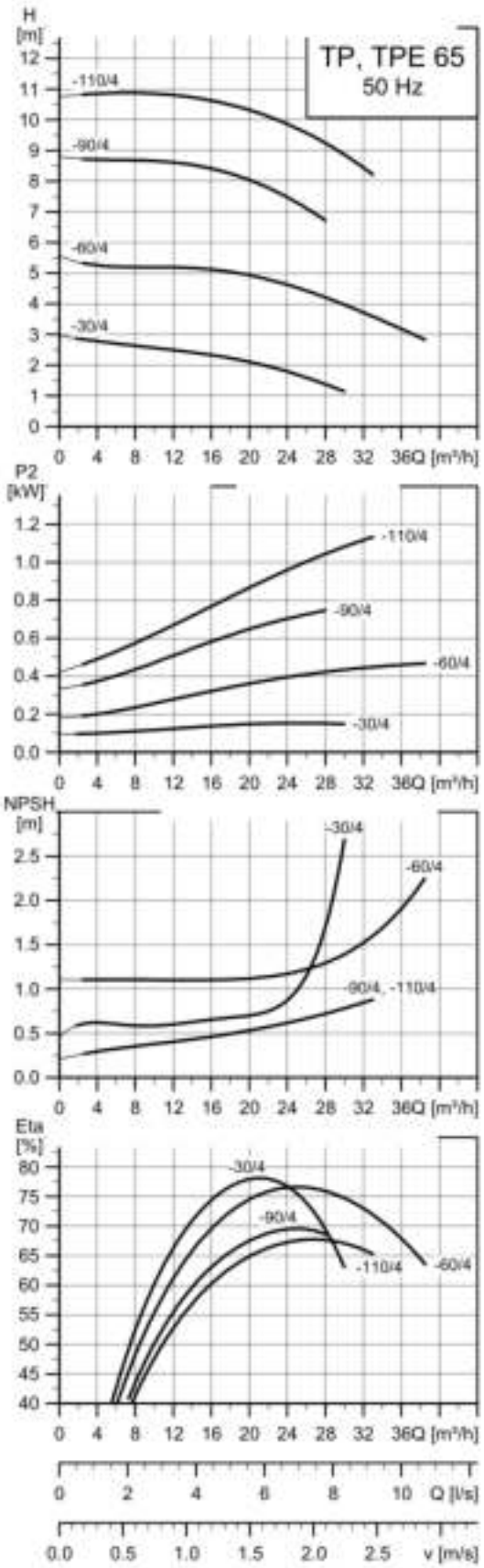

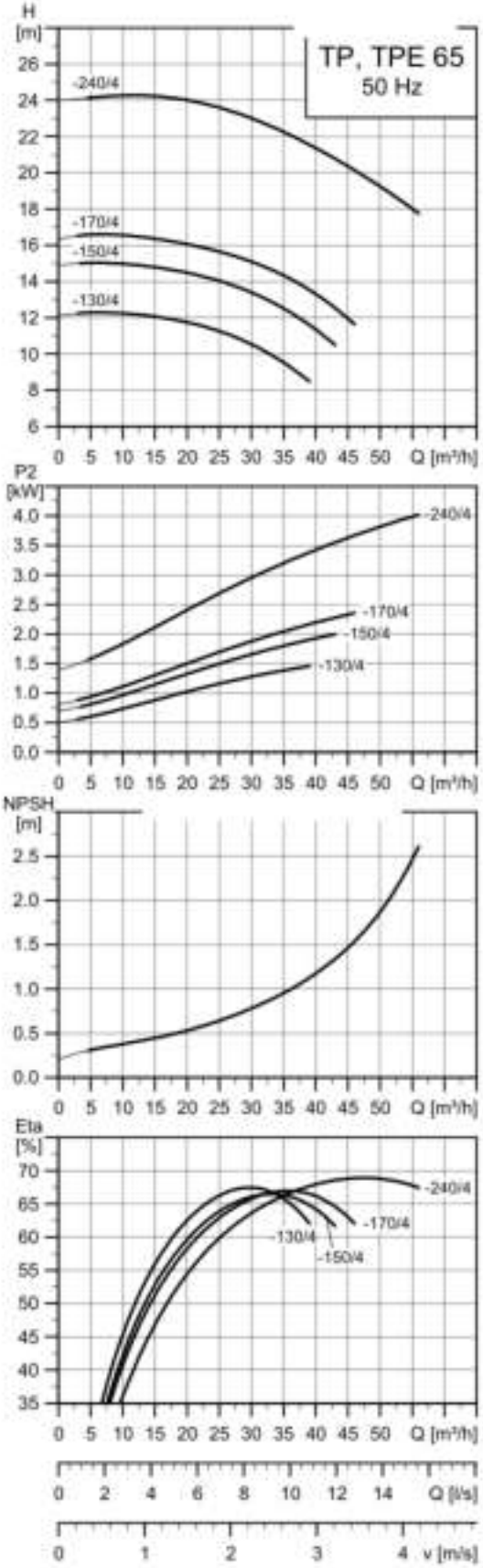

Note: All curves apply to single-head pumps. For further information, see page 167.

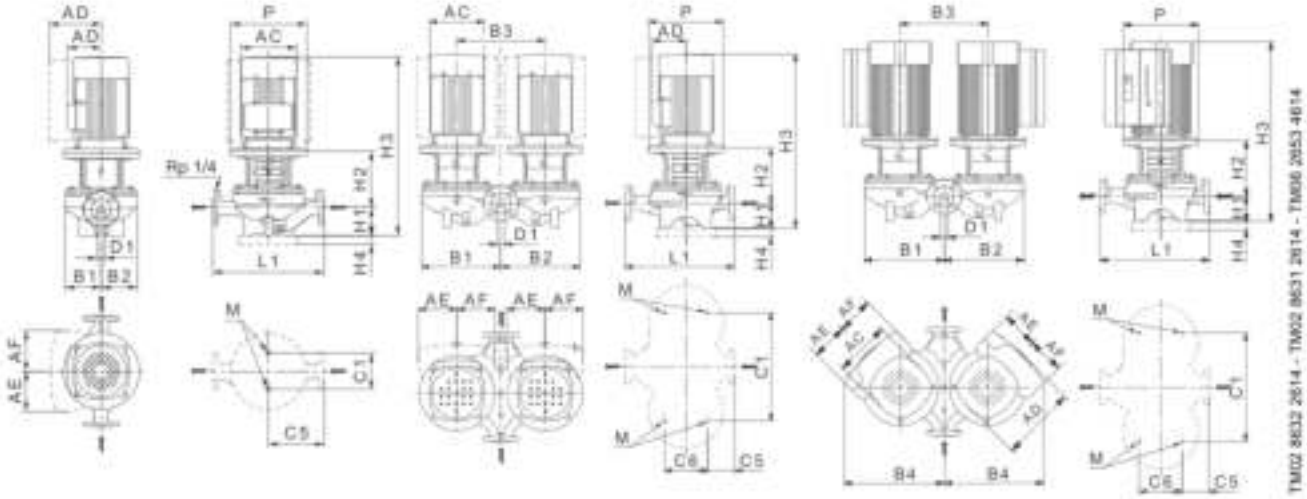

Technical data

TP 65			-30/4	-60/4	-90/4	-110/4	-130/4	-150/4	-170/4	-240/4
TPD			-	-	-	-	-	-	-	-
TPE										-
TPED										-
Series			200	200	300	300	300	300	300	300
IEC size			**	80						
			**	80	80	90	90	100	100	112
	1~ TPE									
	3~ TPE									[illegible]
P2	1~/3~ TP ★	[kW]	0.25/0.25	0.55/0.55	-/0.75	-/1.1	-/1.5	-/2.2	-/3	-/4
	1~/3~ TPE	[kW]								-/4
PN			PN 6/10	PN 6/10	PN 16	PN 16	PN 16	PN 16	PN 16	PN 16
T_{min}/T_{max}		[°C]	[-25;140]	[-25;140]	[-25;120]	[-25;120]	[-25;120]	[-25;120]	[-25;120]	[-25;120]
D1		[mm]	65	65	65	65	65	65	65	65
AC	1~/3~ TP	[mm]	141/141	141/141	-/178	-/178	-/178	-/198	-/198	-/220
	1~/3~ TPE	[mm]								-/191
AD	1~/3~ TP	[mm]	133/109	133/109	-/110	-/110	-/110	-/120	-/120	-/134
	1~/3~ TPE	[mm]	-							-/201
AE	1~/3~ TPE	[mm]	-							-/146
AF	1~/3~ TPE	[mm]								-/146
P		[mm]			200	200	200	250	250	250
[illegible]		[mm]	125/230	125/230	142/298	178/349	178/349	178/349	178/349	178/349
B2 ★★		[mm]	100/240	100/240	124/290	164/383	164/383	164/0	164/383	164/383
B3		[mm]	240	240	320	440	440	440	440	440
[illegible]		[mm]								-/466
[illegible]		[mm]	160/240	160/240	144/400	144/520	144/520	144/520	144/520	144/520
C5 ★★		[mm]	170/63	170/63	180/65	238/111	238/111	238/111	238/111	238/111
C6		[mm]	153	153	175	175	175	175	175	175
L1		[mm]	340	340	360	475	475	475	475	475
H1		[mm]	97	97	105	125	125	125	125	125
H2		[mm]	135	[illegible]	[illegible]	166	166	194	194	194
H3	1~/3~ TP	[mm]	423/423	475/475	-/558	-/612	-/612	-/654	-/654	-/691
	1~/3~ TPE	[mm]	-							-/653
H4 ★★★		[mm]								
**			M16	M16	M16	M16	M16	M16	M16	M16

★ TP, TPD pumps are primarily fitted with IE3 motors. See *Motor data* on page 129.

★★ The dimension before the slash applies to the single-head pump, and the dimension afte he twin-head pump.

★★★ TP, TPE pumps with a H4 dimension are delivered with a base plate. See *Base plates* on pages 259- 261 for base plate dimensions.

TP 80-XXX/4

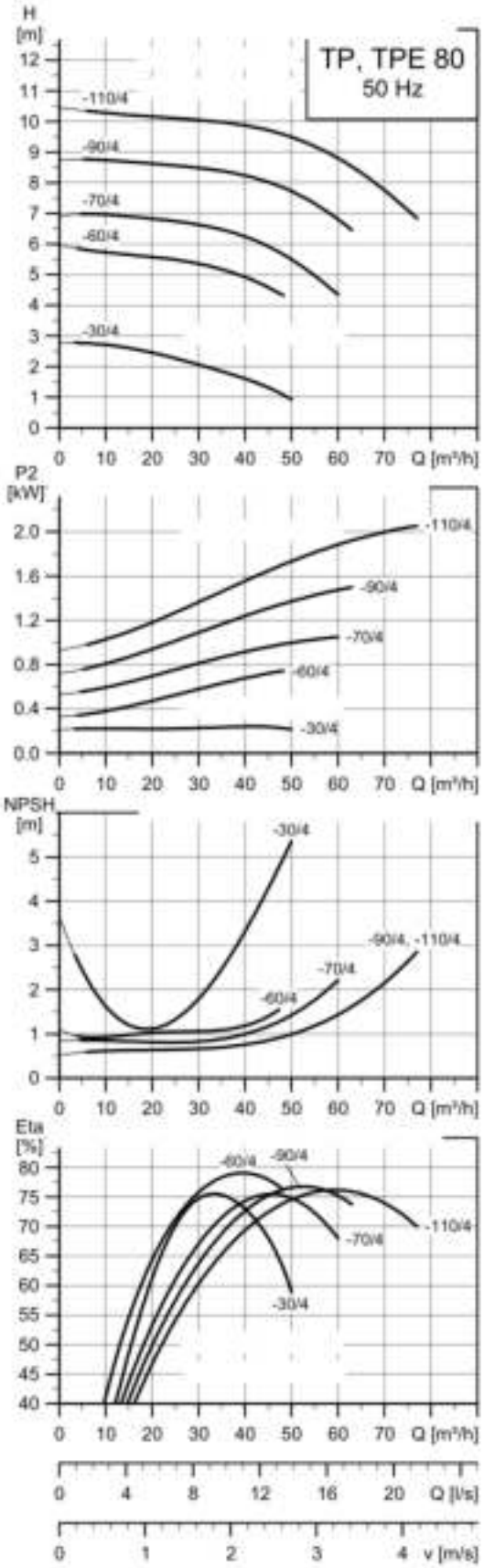

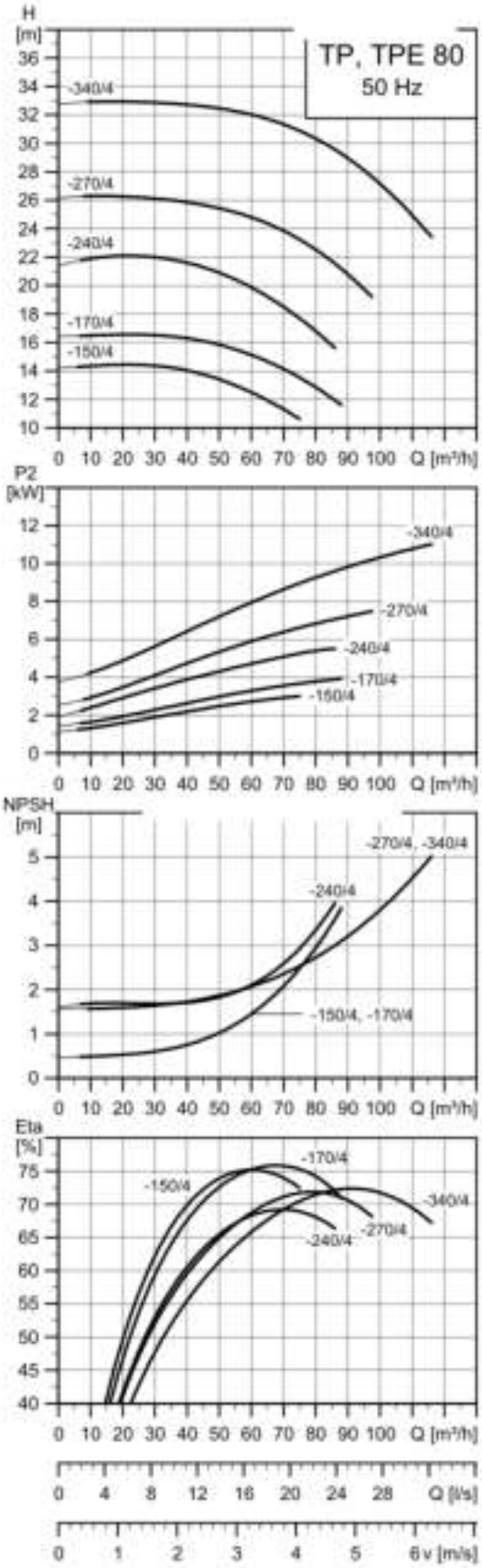

Note: All curves apply to single-head pumps. For further information, see page 167.

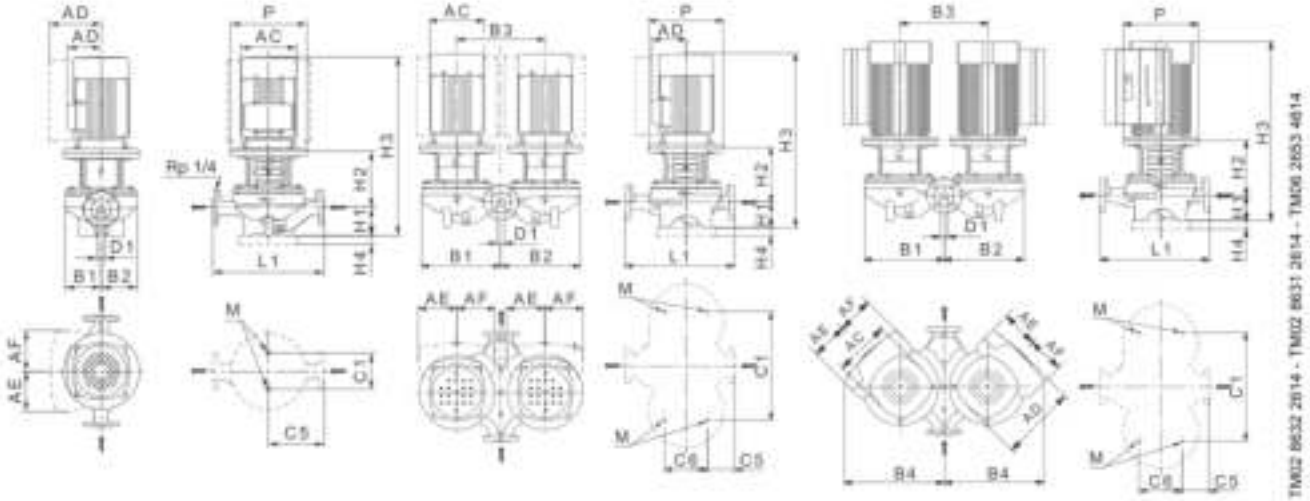

Technical data

TP 80			-30/4	-60/4	-70/4	-90/4	-110/4	-150/4	-170/4	-240/4	-270/4	-340/4
TPD			•	•	•	•	•	•	•	•	•	•
TPE								•	•	•	•	•
TPED								•	•	•	•	•
Series			200	200	300	300	300	300	300	300	300	300
IEC size	1~ TP		80	80								
	3~ TP		71	80	90	90	100	100	112	132	132	160
	1~ TPE											
	3~ TPE							112	112	132	132	160
P2	1~/3~ TP ★	[kW]	0.37/0.37	0.75/0.75	-/1.1	-/1.5	-/2.2	-/3	-/4	-/5.5	-/7.5	-/11
	1~/3~ TPE	[kW]	-					-/3	-/4	-/5.5	-/7.5	-/11
PN			PN 6/PN 10	PN 6/PN 10	PN 16	PN 16	PN 16	PN 16	PN 16	PN 16	PN 16	PN 16
T_{min}-T_{max}		[°C]	[-25;140]	[-25;140]	[-25;120]	[-25;120]	[-25;120]	[-25;120]	[-25;120]	[-25;120]	[-25;120]	[-25;120]
D1		[mm]	80	80	80	80	80	80	80	80	80	80
AC	1~/3~ TP	[mm]	142/141	178/178	-/178	-/178	-/198	-/198	-/220	-/260	-/260	-/316
	1~/3~ TPE	[mm]	-					-/191	-/191	-/255	-/255	-/316
AD	1~/3~ TP	[mm]	133/109	139/110	-/110	-/110	-/120	-/120	-/134	-/159	-/159	-/204
	1~/3~ TPE	[mm]	-					-/201	-/201	-/237	-/237	-/308
AE	1~/3~ TPE	[mm]	-					-/146	-/146	-/173	-/173	-/210
AF	1~/3~ TPE	[mm]	-					-/146	-/146	-/173	-/173	-/210
P		[mm]			200	200	250	250	250	300	300	350
B1 ★★		[mm]	130/230	135/240	176/366	176/366	176/366	187/416	187/416	243/491	243/491	243/491
B2 ★★		[mm]	100/240	100/250	144/354	144/354	144/354	162/405	162/405	226/480	226/480	226/480
B3		[mm]	240	240	400	400	400	470	470	500	500	500
B4 ★★		[mm]						-/481	-/481	-/541	-/541	-
C1 ★★		[mm]	160/240	160/240	144/480	144/480	144/480	144/550	144/550	230/550	230/550	230/550
C5 ★★		[mm]	180/53	180/53	220/93	220/93	220/93	250/133	250/133	310/105	310/105	310/105
C6		[mm]	173	173	175	175	175	175	175	350	350	350
L1		[mm]	360	360	440	440	440	500	500	620	620	620
H1		[mm]	107	107	115	115	115	115	115	140	140	140
H2		[mm]	163	153	176	176	204	204	204	273	273	303
H3	1~/3~ TP	[mm]	513/461	551/541	-/612	-/612	-/654	-/654	-/691	-/792	-/842	-/925
	1~/3~ TPE	[mm]	-					-/654	-/654	-/802	-/802	-/925
H4 ★★★		[mm]										35
M			M16	M16	M16	M16	M16	M16	M16	M16	M16	M16

★ TP, TPD pumps are primarily fitted with IE3 motors. See *Motor data* on page 129.
★★ The dimension before the slash applies to the single-head pump, and the dimension afte he twin-head pump.
★★★TP, TPE pumps with a H4 dimension are delivered with a base plate. See *Base plates* on pages 259- 261 for base plate dimensions.

TP 100-XXX/4

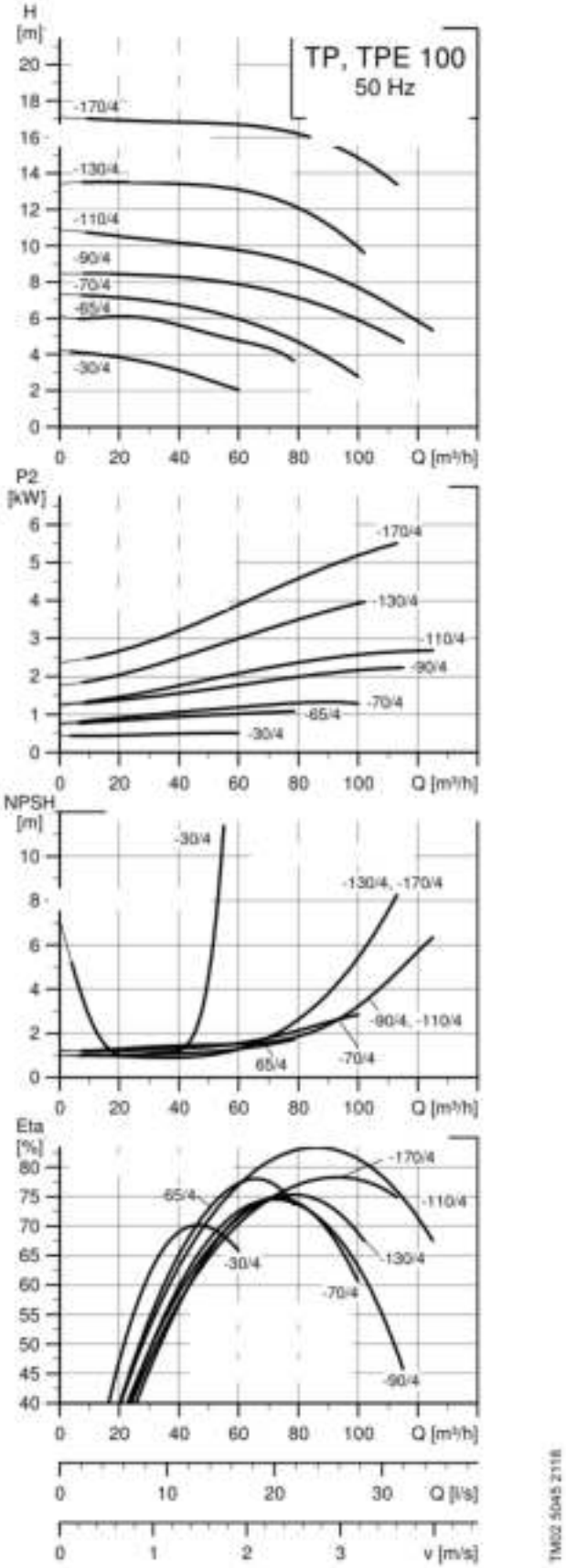

Note: All curves apply to single-head pumps. For further information, see page 167.

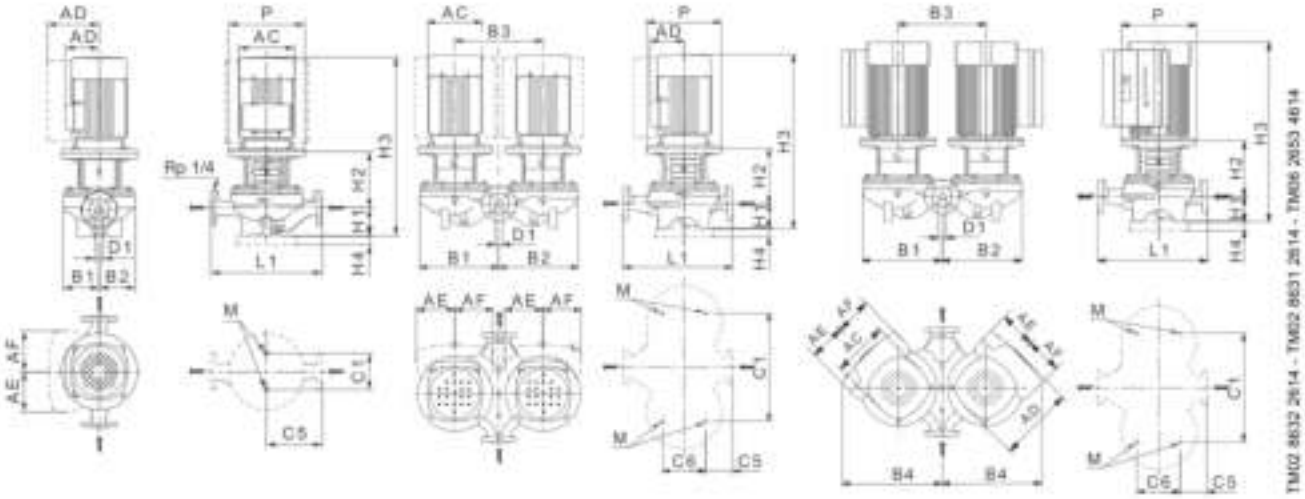

Technical data

TP 100			-30/4	-65/4	-70/4	-90/4	-110/4	-130/4	-170/4
TPD			-	-	-	-	-	-	-
TPE				-	-	-	-	-	-
TPED				-	-	-	-	-	-
Series			200	300	300	300	300	300	300
IEC size	1~ TP		[illegible]	[illegible]					
	3~ TP		[illegible]	90	90	100	100	112	132
	1~ TPE								
	3~ TPE			90	90	100	112	112	132
P2	1~/3~ TP ★	[kW]	0.55/0.55	-/1.1	-/1.5	-/2.2	-/3	-/4	-/5.5
	1~/3~ TPE	[kW]	-	-/1.1	-/1.5	-/2.2	-/3	-/4	-/5.5
PN			PN 6/PN 10	PN 16	PN 16	PN 16	PN 16	PN 16	PN 16
T_{min}/T_{max}		[°C]	[-25;140]	[-25;120]	[-25;120]	[-25;120]	[-25;120]	[-25;120]	[-25;120]
D1		[mm]	100	100	100	100	100	100	100
AC	1~/3~ TP	[mm]	141/141	-/178	-/178	-/198	-/198	-/220	-/260
	1~/3~ TPE	[mm]	-	-/122	-/122	-/191	-/191	-/191	-/255
AD	1~/3~ TP	[mm]	133/109	-/110	-/110	-/120	-/120	-/134	-/159
	1~/3~ TPE	[mm]	-	-/158	-/158	-/201	-/201	-/201	-/237
AE	1~/3~ TPE	[mm]	-	-/134	-/134	-/146	-/146	-/146	-/173
AF	1~/3~ TPE	[mm]	-	-/134	-/134	-/146	-/146	-/146	-/173
P		[illegible]		200	200	250	250	250	300
[illegible]		[mm]	175/280	190/414	190/414	190/414	190/414	201/443	201/443
B2 ★★		[mm]	125/305	151/395	151/395	151/395	151/395	173/429	173/429
B3		[mm]	280	280	470	470	470	500	500
[illegible]		[illegible]		-/457	-/457	-/496	-/496	-/496	-/541
[illegible]		[mm]	200/280	230/550	230/550	230/550	230/550	230/550	230/550
C5 ★★		[mm]	225/83	250/110	250/110	275/110	275/110	275/110	275/110
C6		[mm]	221	230	230	230	230	230	230
L1		[mm]	450	550	550	550	550	550	550
H1		[mm]	122	140	140	140	140	140	140
H2		[mm]	172	173	173	201	201	261	277
H3	1~/3~ TP	[mm]	525/525	-/634	-/634	-/676	-/676	-/773	-/796
	1~/3~ TPE	[mm]	-	-/587	-/587	-/675	-/675	-/731	-/806
H4 ★★★		[mm]	-		-	-	-		
M			M16	M16	M16	M16	M16	M16	M16

★ TP, TPD pumps are primarily fitted with IE3 motors. See *Motor data* on page 129.

★★ The dimension before the slash applies to the single-head pump, and the dimension afte he twin-head pump.

★★★ TP, TPE pumps with a H4 dimension are delivered with a base plate. See *Base plates* on pages 259- 261 for base plate dimensions.

TP 100-XXX/4

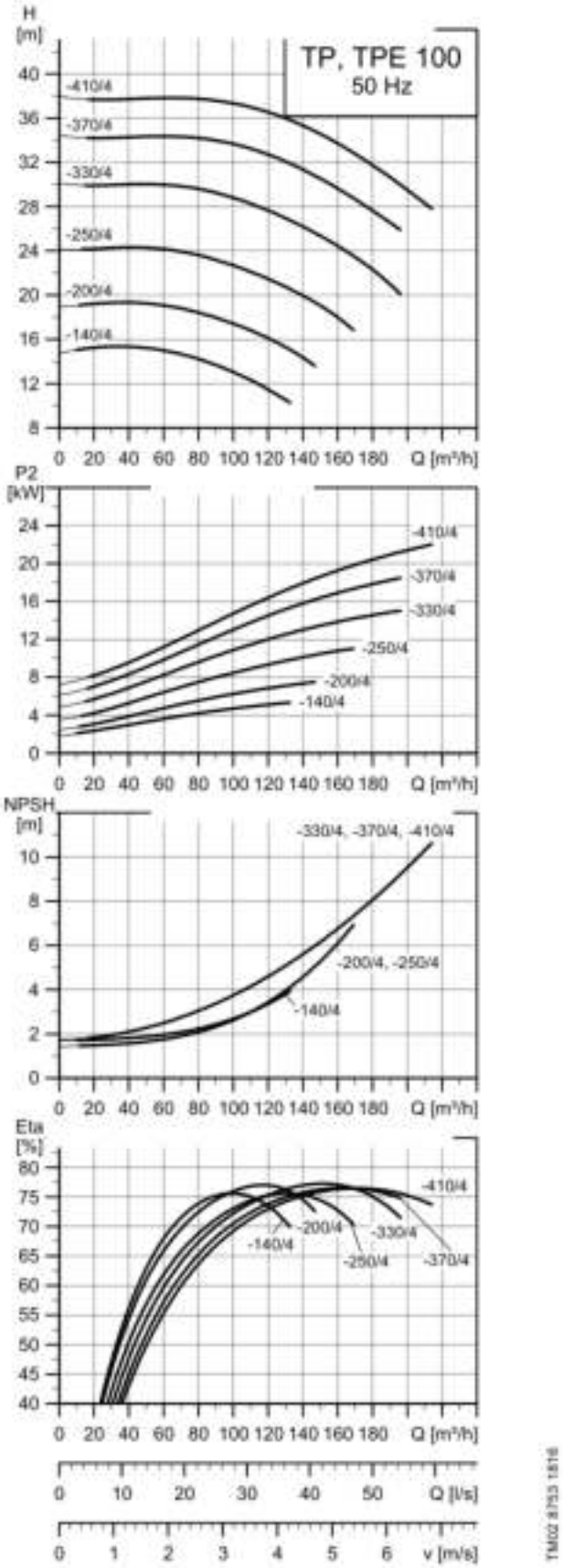

Note: All curves apply to single-head pumps. For further information, see page 167.

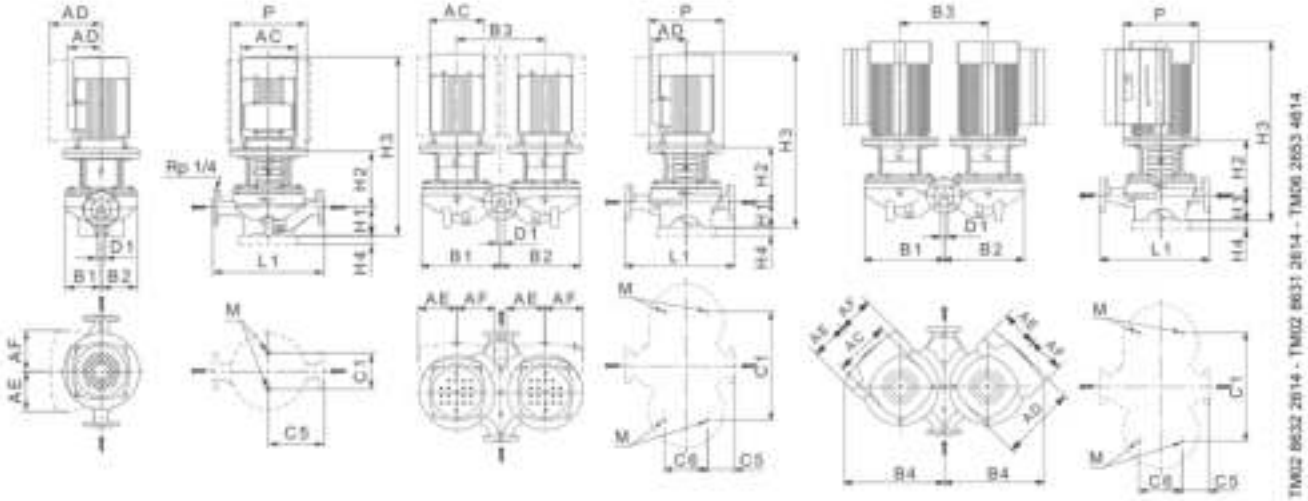

Technical data

TP 100			-140/4	-200/4	-250/4	-330/4	-370/4	-410/4
TPD				-	-	-	-	-
TPE			•	•	•	•	•	•****
TPED				-	-	-	-	
Series			300	300	300	300	300	300
IEC size	1~ TP		[illegible]	132	160	160	180	180
	3~ TP		[illegible]					
	1~ TPE							
	3~ TPE		[illegible]	132	160	160	180	180
P2	1~/3~ TP ★	[kW]	-/5.5	-/7.5	-/11	-/15	-/18.5	-/22
	1~/3~ TPE	[kW]	-/5.5	-/7.5	-/11	-/15	-/18.5	-/22
PN			PN25	PN16/25	PN16/25	PN16/25	PN16/25	PN16/25
T_{min}/T_{max}		[°C]	[-40;150]	[-40;150]	[-40;150]	[-40;150]	[-40;150]	[-40;150]
D1		[mm]	100	100	100	100	100	100
AC	1~/3~ TP	[mm]	-/267	-/260	-/316	-/316	-/368	-/368
	1~/3~ TPE	[mm]	-/255	-/255	-/316	-/316	-/316	-/368
AD	1~/3~ TP	[mm]	-/167	-/159	-/204	-/204	-/286	-/286
	1~/3~ TPE	[mm]	-/237	-/237	-/308	-/308	-/308	-/501
AE	1~/3~ TPE	[mm]	-/173	-/173	-/210	-/210	-/210	-/126
AF	1~/3~ TPE	[mm]	-/173	-/173	-/210	-/210	-/210	-/126
P		[mm]	300	300	350	350	350	350
B1 ★★		[mm]	290/-	290/579	290/579	290/579	290/579	290/579
B2 ★★		[mm]	249/-	249/561	249/561	249/561	249/561	249/561
B3		[mm]		600	600	600	600	600
B4 ★★		[mm]		-/591				
C1 ★★		[mm]	230/-	230/680	230/680	230/680	230/680	230/680
C5 ★★		[mm]	335/-	335/110	335/110	335/110	335/110	335/110
C6		[mm]		350	350	350	350	350
L1		[mm]	670	670	670	670	670	670
H1		[mm]	175	175	175	175	175	175
H2		[mm]	254	254	308	308	308	308
H3	1~/3~ TP	[mm]	-/820	-/858	-/965	-/1039	-/998	-/1079
	1~/3~ TPE	[mm]	-/842	-/842	-/965	-/1009	-/1035	-/1071
H4 ★★★		[mm]			35	35	35	35
M			M16	M16	M16	M16	M16	M16

★ TP, TPD pumps are primarily fitted with IE3 motors. See *Motor data* on page 129.

★★ The dimension before the slash applies to the single-head pump, and the dimension afte he twin-head pump.

★★★TP, TPE pumps with a H4 dimension are delivered with a base plate. See *Base plates* on pages 259- 261 for base plate dimensions.

★★★★The integrated CUE can be positioned in an angle deviating from this drawing with up to 30 degrees. For further information look in Grundfos Product Center.

TP 125-XXX/4

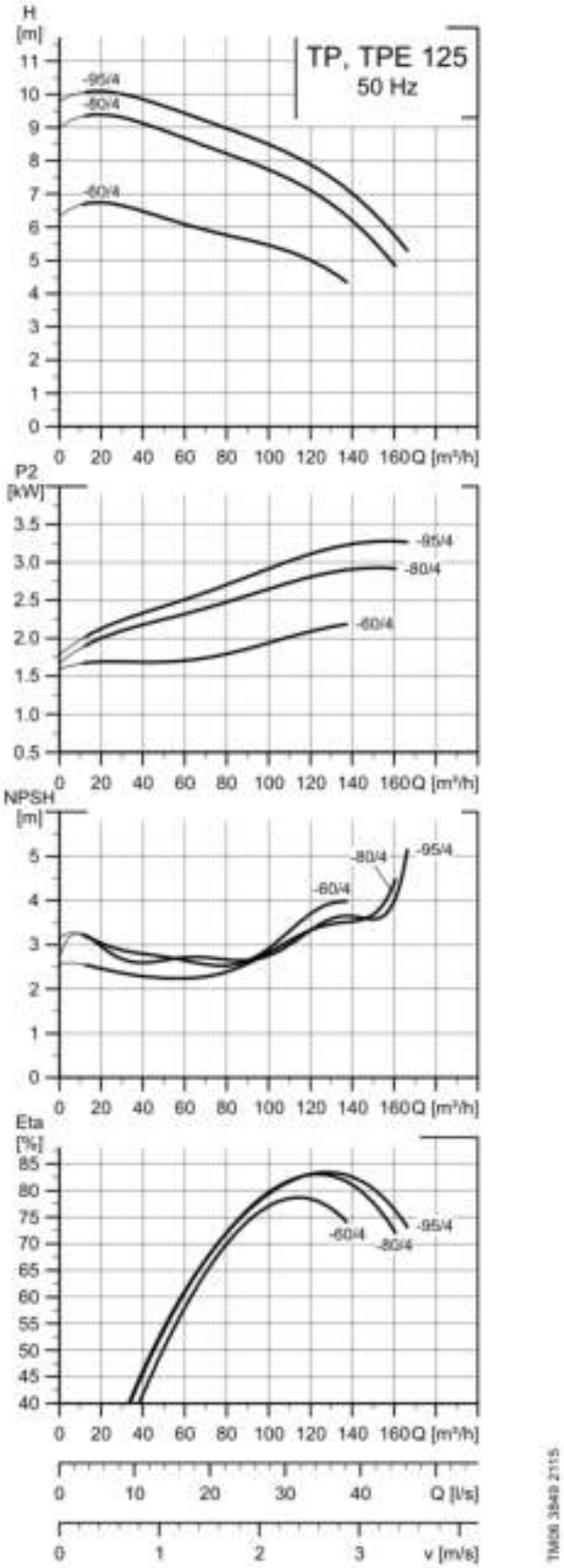
TP, TPE 125
50 Hz
H [m]
-95/4
-80/4
-60/4
P2 [kW]
NPSH [m]
Eta [%]
Q [m³/h]
Q [l/s]
v [m/s]
TM06 3649 2115

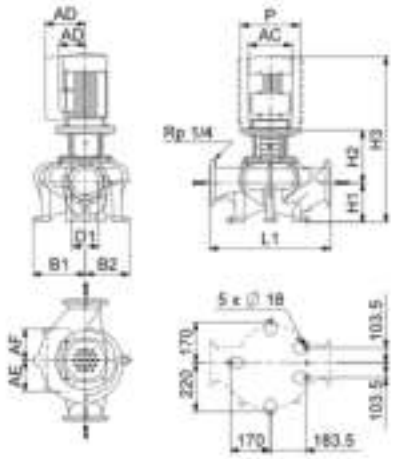

TM05 0690 2814

Technical data

TP 125			-60/4	-80/4	-95/4
TPD					
TPE			*	*	*
TPED					
Series			300	300	300
IEC size	* TP				
	* TPE		*100	100	112
	1~ TPE				
	3~ TPE		*100	100	112
P2	1~/3~ TP ★	[kW]	-/2.2	-/3	-/4
	1~/3~ TPE	[kW]	-/2.2	-/3	-/4
PN			PN 16	PN 16	PN 16
T_{min};T_{max}		[°C]	[-25;120]	[-25;120]	[-25;120]
D1		[mm]	125	125	125
AC	1~/3~ TP	[mm]	-/198	-/198	-/220
	1~/3~ TPE	[mm]	-/191	-/191	-/191
AD	1~/3~ TP	[mm]	-/120	-/120	-/134
	1~/3~ TPE	[mm]	-/201	-/201	-/201
AE	1~/3~ TPE	[mm]	-/146	-/146	-/146
AF	1~/3~ TPE	[mm]	-/146	-/146	-/146
P		[mm]	250	250	250
B1 ★★		[mm]	243/-	243/-	243/-
B2 ★★		[mm]	193/-	193/-	193/-
B3		[mm]	-	-	-
L1		[mm]	620	620	620
H1		[mm]	210	210	210
H2		[mm]	-/225	-/225	-/225
H3	1~/3~ TP	[mm]	-/770	-/770	-/807
	1~/3~ TPE	[mm]	-/769	-/769	-/769

★ TP, TPD pumps are primarily fitted with IE3 motors. See *Motor data* on page 129.

★★ The dimension before the slash applies to the single-head pump, and the dimension afte he twin-head pump.

TP 125-XXX/4

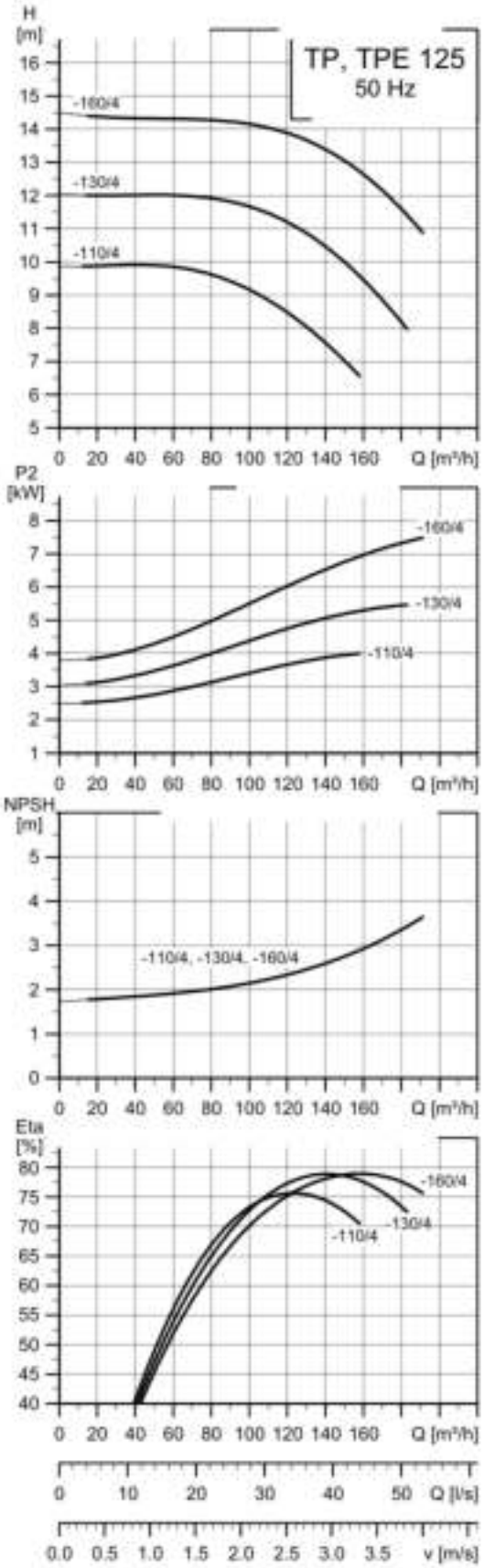

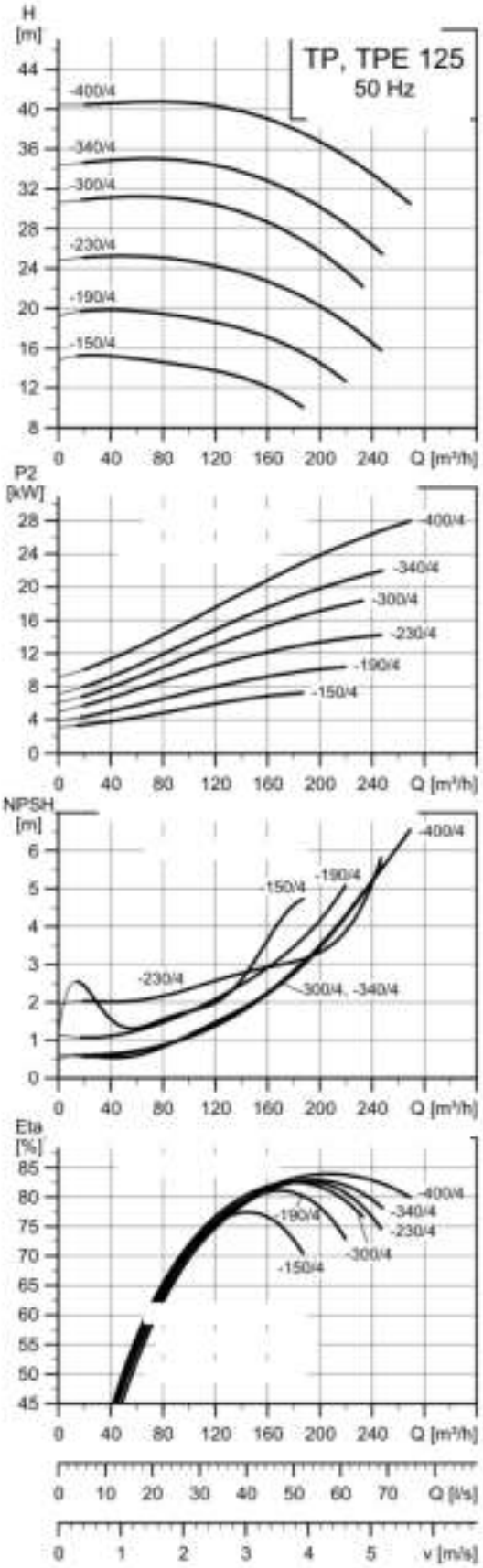

Note: All curves apply to single-head pumps. For further information, see page 167.

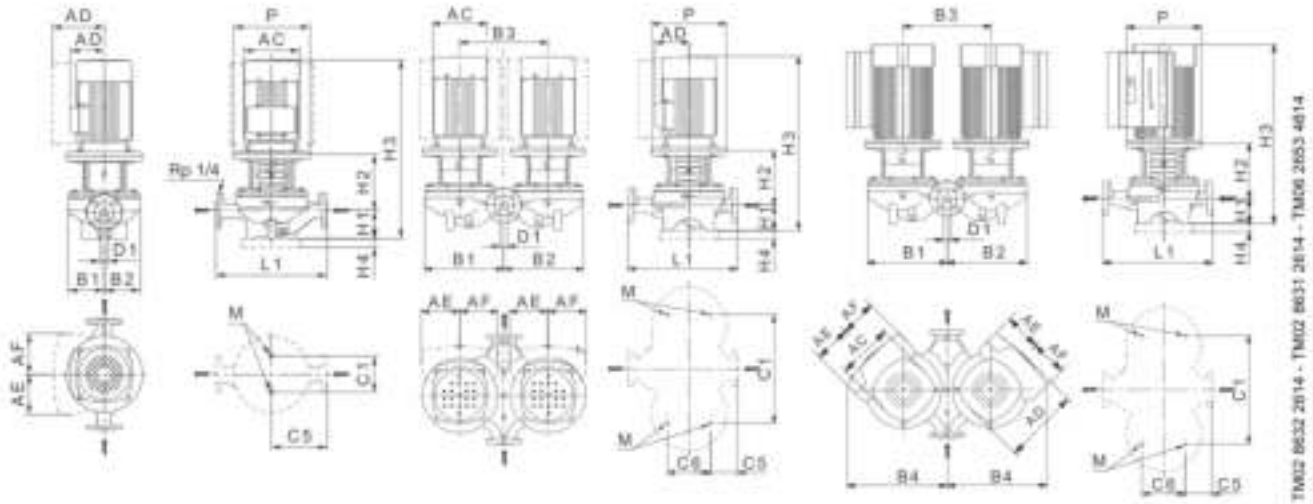

Technical data

TP 125			-110/4	-130/4	-160/4	-150/4	-190/4	-230/4	-300/4	-340/4	-400/4
TPD			-	-	-		-	-	-	-	-
TPE			•	•	•	•	•	•	•	• • • •	• • • •
TPED			•	•	•			•	•		
Series			300	300	300	300	300	300	300	300	300
IEC size	3~ TP		112	132	132	132	160	160	180	180	200
	1~ TPE										
	3~ TPE		[illegible]	132	132	132	160	160	180	180	200
P2	1~/3~ TP ★	[kW]	-/4	-/5.5	-/7.5	-/7.5	-/11	-/15	-/18.5	-/22	-/30
	1~/3~ TPE	[kW]	-/4	-/5.5	-/7.5	-/7.5	-/11	-/15	-/18.5	-/22	-/30
PN			PN 16	PN 16	PN 16	PN 25	PN 16/25	PN 16/25	PN 16/25	PN 16/25	PN 16/25
T_{min};T_{max}		[°C]	[-25;120]	[-25;120]	[-25;120]	[-40;150]	[-40;140]	[-40;140]	[-40;140]	[-40;140]	[-40;140]
D1		[mm]	125	125	125	125	125	125	125	125	125
AC	1~/3~ TP	[mm]	-/220	-/260	-/260	-/267	-/316	-/316	-/368	-/368	-/408
	1~/3~ TPE	[mm]	-/191	-/255	-/255	-/255	-/316	-/316	-/316	-/368	-/408
AD	1~/3~ TP	[mm]	-/134	-/159	-/159	-/167	-/204	-/204	-/286	-/286	-/315
	1~/3~ TPE	[mm]	-/201	-/237	-/237	-/237	-/308	-/308	-/308	-/501	-/511
AE	1~/3~ TPE	[mm]	-/146	-/173	-/173	-/173	-/210	-/210	-/210	-/126	-/126
AF	1~/3~ TPE	[mm]	-/146	-/173	-/173	-/173	-/210	-/210	-/210	-/126	-/126
P		[mm]	250	300	300	300	350	350	350	350	400
[illegible]		[mm]	-/537	250/537	250/537	244/-	244/537	244/537	273/568	273/568	273/568
B2 ★★		[mm]	-/518	202/518	202/518	220/-	220/516	220/516	236/545	236/545	236/545
B3		[mm]	600	600	[illegible]		600	600	600	600	600
[illegible]		[mm]	-/546	-/591	-/591						
[illegible]		[mm]	-/680	230/680	230/680	230/-	230/680	230/680	230/680	230/680	230/680
C5 ★★		[mm]	-/84	310/84	310/84	400/-	400/175	400/175	400/175	400/175	400/175
C6		[mm]	300	300	[illegible]		350	350	350	350	350
L1		[mm]	620	620	620	800	800	800	800	800	800
H1		[mm]	215	215	215	215	215	215	215	215	215
H2		[mm]	267	283	283	318	315	315	312	312	312
H3	1~/3~ TP	[mm]	-/854	-/877	-/927	-/906	-/1086	-/1116	-/1085	-/1115	-/1163
	1~/3~ TPE	[mm]	-/812	-/887	-/887	-/889	-/1056	-/1056	-/1079	-/1115	-/1163
H4 ★★★		[mm]					35	35	35	35	35
M			M16	M16	M16	M16	M16	M16	M16	M16	M16

★ TP, TPD pumps are primarily fitted with IE3 motors. See *Motor data* on page 129.

★★ The dimension before the slash applies to the single-head pump, and the dimension afte he twin-head pump.

★★★TP, TPE pumps with a H4 dimension are delivered with a base plate. See *Base plates* on pages 259- 261 for base plate dimensions.

★★★★The integrated CUE can be positioned in an angle deviating from this drawing with up to 30 degrees. For further information look in Grundfos Product Center.

TP 150-XXX/4

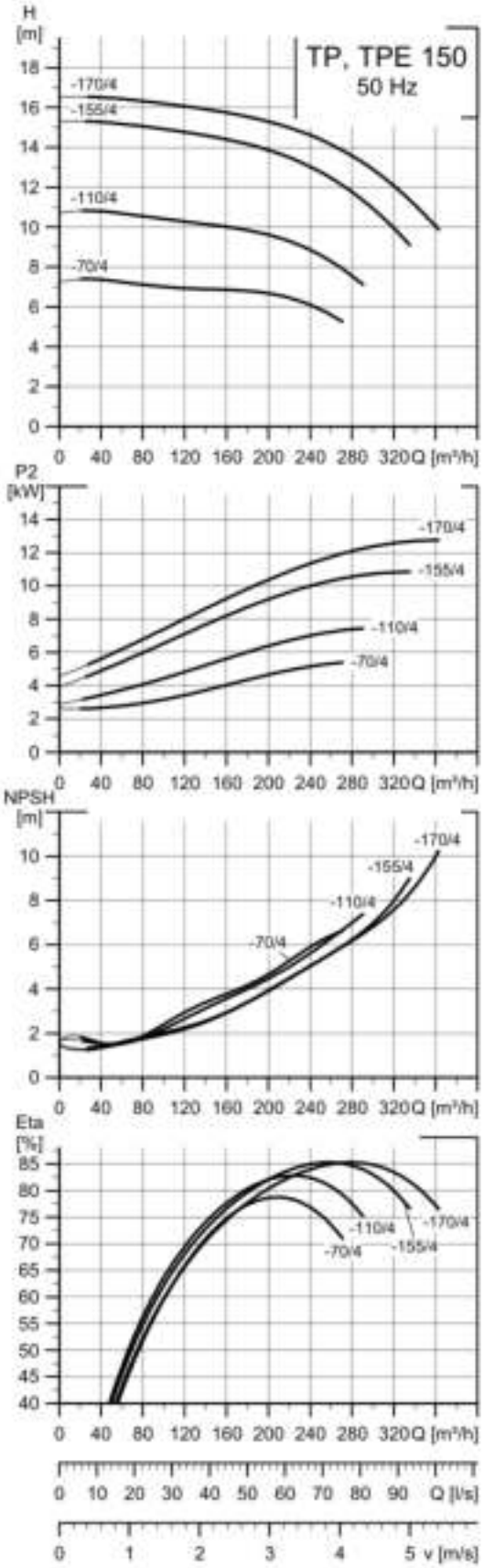
TP, TPE 150
50 Hz
H [m]
-170/4
-155/4
-110/4
-70/4
0 40 80 120 160 200 240 280 320 Q [m³/h]
P2 [kW]
-170/4
-155/4
-110/4
-70/4
0 40 80 120 160 200 240 280 320 Q [m³/h]
NPSH [m]
-170/4
-155/4
-110/4
-70/4
0 40 80 120 160 200 240 280 320 Q [m³/h]
Eta [%]
-110/4
-170/4
-70/4
-155/4
0 40 80 120 160 200 240 280 320 Q [m³/h]
0 10 20 30 40 50 60 70 80 90 Q [l/s]
0 1 2 3 4 5 v [m/s]
TM06 3850 2115

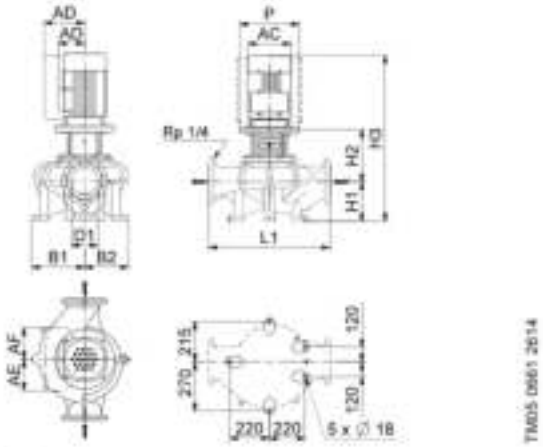

Technical data

TP 150			-70/4	-110/4	-155/4	-170/4
TPD						
TPE			-	-	-	-
TPED						
Series			300	300	300	300
IEC size	[illegible]		[illegible]	132	160	160
	1~ TPE					
	3~ TPE		[illegible]	160	160	160
P2	1~/3~ TP ★	[kW]	-/5.5	-/7.5	-/11	-/15
	1~/3~ TPE	[kW]	-/5.5	-/7.5	-/11	-/15
PN			PN 16	PN 16	PN 16	PN 16
T_{min}-T_{max}		[°C]	[-25;120]	[-25;120]	[-25;120]	[-25;120]
D1		[mm]	150	150	150	150
AC	1~/3~ TP	[mm]	-/267	-/267	-/322	-/322
	1~/3~ TPE	[mm]	-/255	-/255	-/316	-/316
AD	1~/3~ TP	[mm]	-/167	-/167	-/197	-/197
	1~/3~ TPE	[mm]	-/237	-/237	-/308	-/308
AE	1~/3~ TPE	[mm]	-/173	-/173	-/210	-/210
AF	1~/3~ TPE	[mm]	-/173	-/173	-/210	-/210
P		[mm]	300	300	350	350
[illegible]		[mm]	295/-	295/-	295/-	295/-
B2 ★★		[mm]	240/-	240/-	240/-	240/-
L1		[mm]	800	800	800	800
H1		[mm]	250	250	250	250
H2		[mm]	284	284	314	314
H3	1~/3~ TP	[mm]	-/913	-/963	-/1120	-/1150
	1~/3~ TPE	[mm]	-/923	-/923	-/1090	-/1141

★ TP, TPD pumps are primarily fitted with IE3 motors. See *Motor data* on page 129.

★★ The dimension before the slash applies to the single-head pump, and the dimension afte he twin-head pump.

TP 150-XXX/4

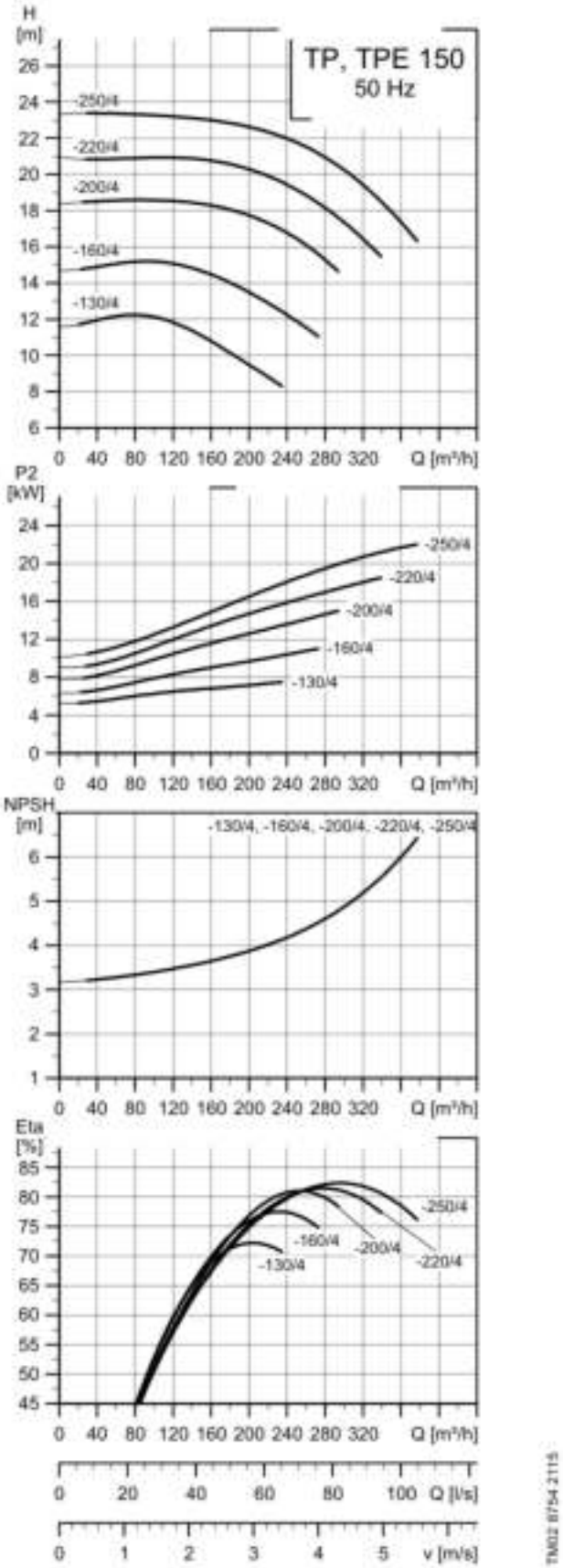

Note: All curves apply to single-head pumps. For further information, see page 167.

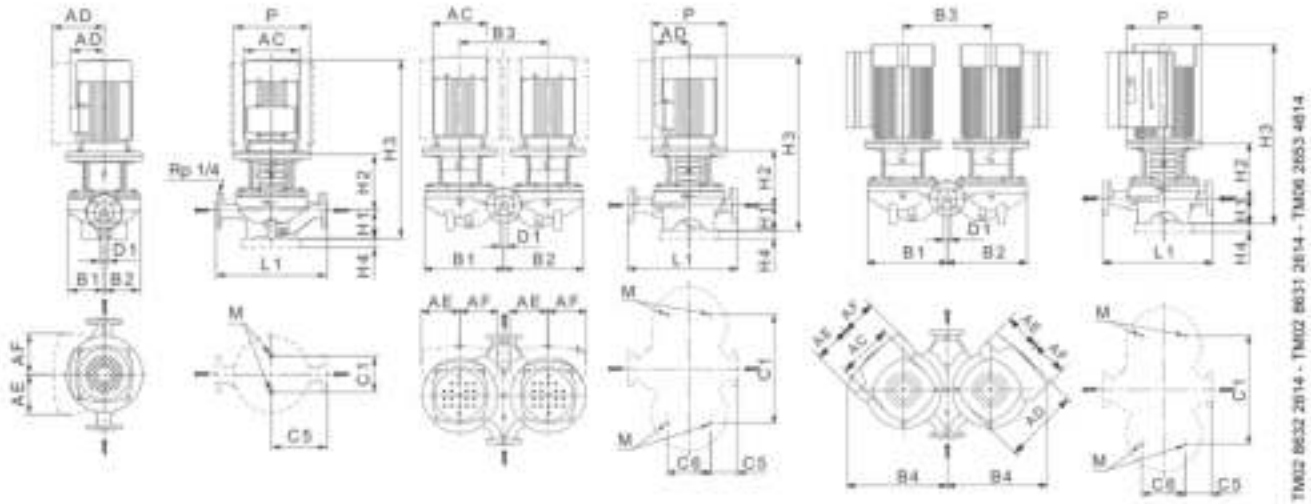

Technical data

TP 150			-130/4	-160/4	-200/4	-220/4	-250/4
TPD			-	-	-	-	-
TPE			•	•	•	•	• ****
[illegible]			-	-	-	-	-
Series			300	300	300	300	300
IEC size	1~ TP		[illegible]	160	160	180	180
	1~ TPE						-
	3~ TPE		[illegible]	160	160	180	180
P2	1~/3~ TP ★	[kW]	-/7.5	-/11	-/15	-/18.5	-/22
	1~/3~ TPE	[kW]	-/7.5	-/11	-/15	-/18.5	-/22
PN			PN 16/25	PN 16/25	PN 16/25	PN 16/25	PN 16/25
T_{min}/T_{max}		[°C]	[-40;140]	[-40;140]	[-40;140]	[-40;140]	[-40;140]
D1		[mm]	150	150	150	150	150
AC	1~/3~ TP	[mm]	-/267	-/316	-/316	-/368	-/368
	1~/3~ TPE	[mm]	-/255	-/316	-/316	-/316	-/368
AD	1~/3~ TP	[mm]	-/167	-/204	-/204	-/286	-/286
	1~/3~ TPE	[mm]	-/237	-/308	-/308	-/308	-/492
AE	1~/3~ TPE	[mm]	-/173	-/210	-/210	-/210	-/126
AF	1~/3~ TPE	[mm]	-/173	-/210	-/210	-/210	-/126
P		[mm]	300	350	350	350	350
[illegible]		[mm]	296/583	296/583	296/583	296/583	296/583
B2 ★★		[mm]	237/553	237/553	237/553	237/553	237/553
B3		[mm]	600	600	600	600	600
[illegible]		[mm]	-/591				-
[illegible]		[mm]	230/680	230/680	230/680	230/680	230/680
C5 ★★		[mm]	400/153	400/153	400/153	400/153	400/153
C6		[mm]	350	350	350	350	350
L1		[mm]	800	800	800	800	800
H1		[mm]	215	215	215	215	215
H2		[mm]	291	321	321	321	321
H3	1~/3~ TP	[mm]	-/917	-/1019	-/1093	-/1052	-/1133
	1~/3~ TPE	[mm]	-/896	-/1019	-/1063	-/1089	-/1125
H4 ★★★		[mm]	[illegible]	[illegible]	35	35	35
M			***6	M16	M16	M16	M16

★ TP, TPD pumps are primarily fitted with IE3 motors. See *Motor data* on page 129.

★★ The dimension before the slash applies to the single-head pump, and the dimension afte he twin-head pump.

★★★TP, TPE pumps with a H4 dimension are delivered with a base plate. See *Base plates* on pages 259- 261 for base plate dimensions.

★★★★The integrated CUE can be positioned in an angle deviating from this drawing with up to 30 degrees. For further information look in Grundfos Product Center.

TP 150-XXX/4

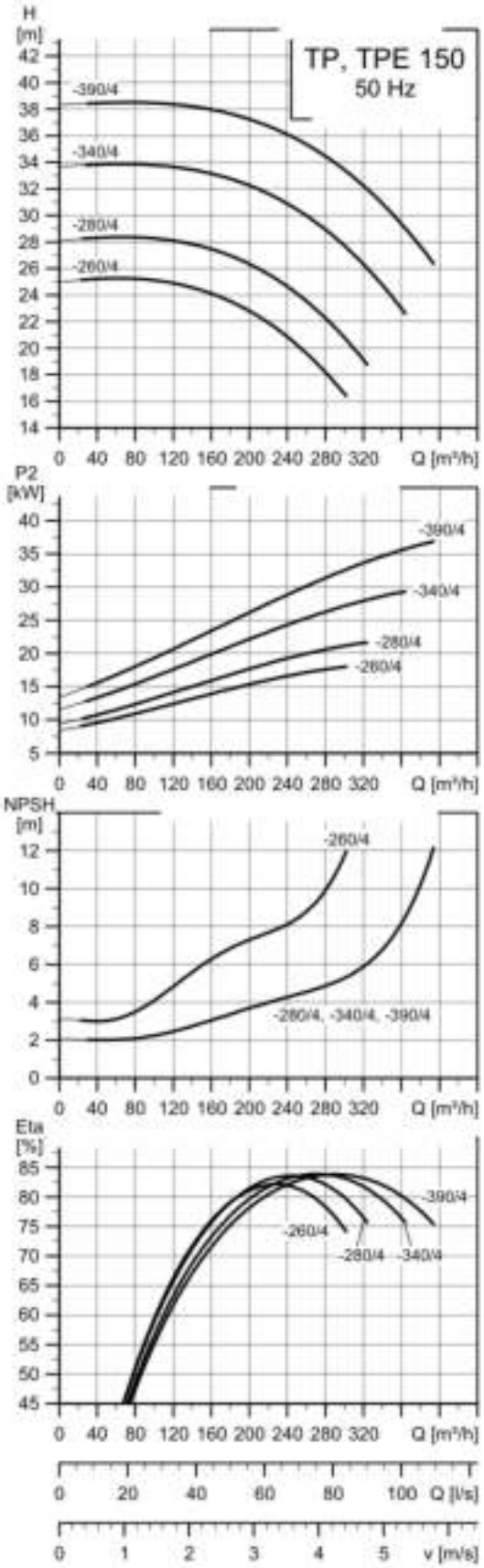
TP, TPE 150
50 Hz
H [m]
-390/4
-340/4
-280/4
-260/4
Q [m³/h]
P2 [kW]
NPSH [m]
Eta [%]
Q [l/s]
v [m/s]
TM03 4548 2115

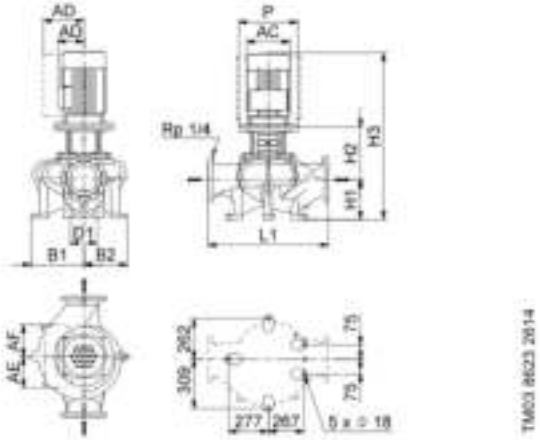

Technical data

TP 150			-260/4	-280/4	-340/4	-390/4
TPD				-		-
TPE			•	- ***	- ***	- ***
TPED						
Series			300	300	300	300
IEC size				-		-
	3~ TP		180	180	200	225
	1~ TPE			-		-
	3~ TPE		180	180	200	225
P2	1~/3~ TP ★	[kW]	-/18.5	-/22	-/30	-/37
	1~/3~ TPE	[kW]	-/18.5	-/22	-/30	-/37
PN			PN 16/25	PN 16/25	PN 16/25	PN 16/25
T_{min}-T_{max}		[°C]	[-40;140]	[-40;140]	[-40;140]	[-40;140]
D1		[mm]	150	150	150	150
AC	1~/3~ TP	[mm]	-/368	-/368	-/408	-/449
	1~/3~ TPE	[mm]	-/316	-/368	-/408	-/449
AD	1~/3~ TP	[mm]	-/286	-/286	-/315	-/338
	1~/3~ TPE	[mm]	-/308	-/501	-/511	-/558
AE	1~/3~ TPE	[mm]	-/210	-/126	-/126	-/159
AF	1~/3~ TPE	[mm]	-/210	-/126	-/126	-/159
P		[mm]	350	350	400	450
B1 ★★		[mm]	335/-	335/-	335/-	335/-
B2 ★★		[mm]	288/-	288/-	288/-	288/-
L1		[mm]	800	800	800	800
H1		[mm]	235	235	235	235
H2		[mm]	319	319	319	349
H3	1~/3~ TP	[mm]	-/1069	-/1150	-/1199	-/1232
	1~/3~ TPE	[mm]	-/1106	-/1150	-/1199	-/1232

★ TP, TPD pumps are primarily fitted with IE3 motors. See *Motor data* on page 129.

★★ The dimension before the slash applies to the single-head pump, and the dimension afte he twin-head pump.

*** The integrated CUE can be positioned in an angle deviating from this drawing with up to 30 degrees. For further information look in Grundfos Product Center.

TP 150-XXX/4

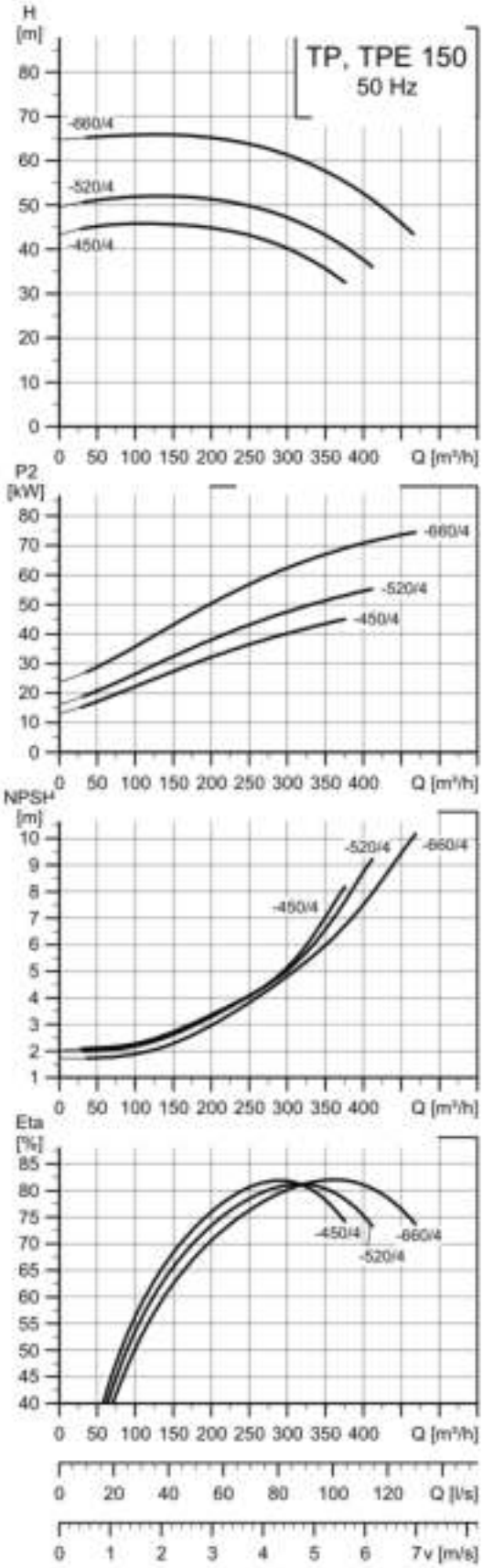

TM05 0538 2115

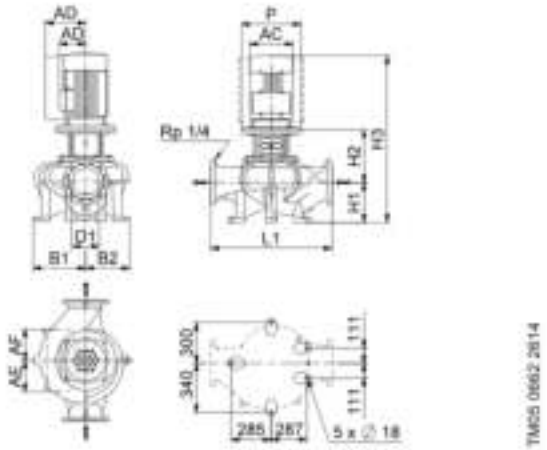

Technical data

TP 150			-450/4	-520/4	-660/4
TPD					-
TPE			- * * *	- * * *	-
TPED					—
Series			300	300	300
IEC size	[illegible]				—
	[illegible]		225	250	280
	1~ TPE				—
	3~ TPE		225	[illegible]	—
P2	1~/3~ TP ★	[kW]	-/45	-/55	-/75
	1~/3~ TPE	[kW]	-/45	-/55	-
PN			PN 16/25	PN 16/25	PN 16/25
T_{min}-T_{max}		[°C]	[-40;140]	[-40;140]	[-40;140]
D1		[mm]	150	150	150
AC	1~/3~ TP	[mm]	-/442	-/496	-/555
	1~/3~ TPE	[mm]	-/442	-/496	-
AD	1~/3~ TP	[mm]	-/325	-/392	-/432
	1~/3~ TPE	[mm]	-/600	-/600	-
AE	1~/3~ TPE	[mm]	-/159	-/159	-
AF	1~/3~ TPE	[mm]	-/159	-/159	-
P		[mm]	450	550	550
B1 ★ ★		[mm]	373/-	373/-	373/-
B2 ★ ★		[mm]	333/-	333/-	333/-
L1		[mm]	1000	1000	1000
H1		[mm]	250	250	250
H2		[mm]	352	352	352
H3	1~/3~ TP	[mm]	-/1316	-/1419	-/1422
	1~/3~ TPE	[mm]	-/1316	-/1419	-

★ TP, TPD pumps are primarily fitted with IE3 motors. See *Motor data* on page 129.

★ ★ The dimension before the slash applies to the single-head pump, and the dimension afte he twin-head pump.

* * * The integrated CUE can be positioned in an angle deviating from this drawing with up to 30 degrees. For further information look in Grundfos Product Center.

TP 200-XXX/4

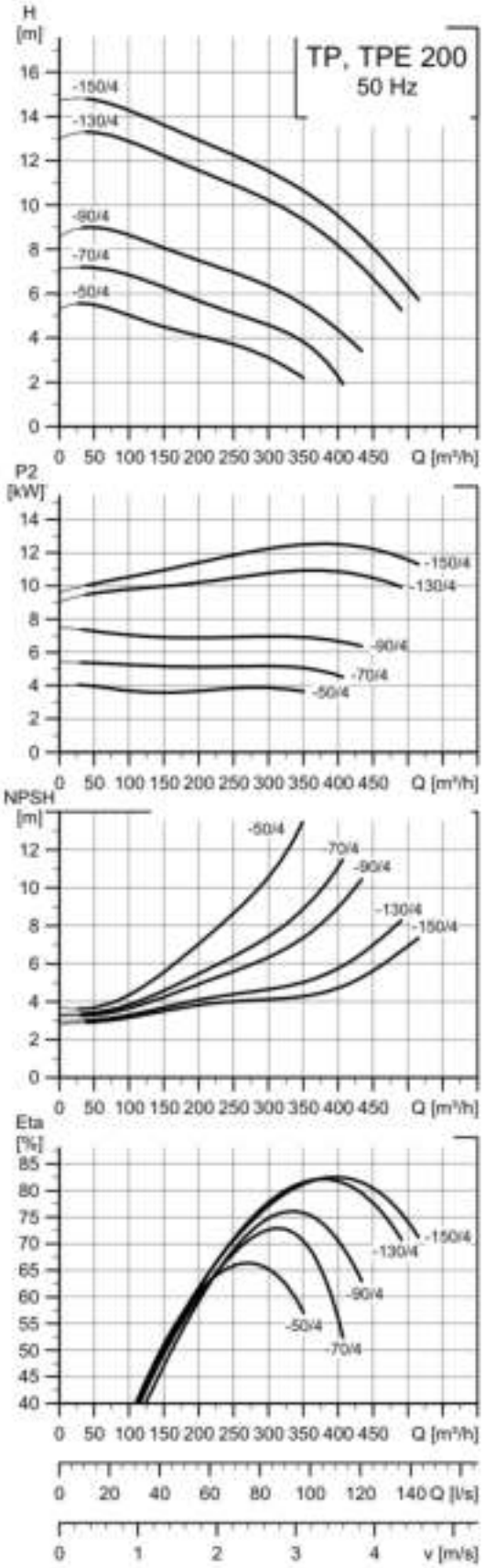
TP, TPE 200
50 Hz
H [m]
-150/4
-130/4
-90/4
-70/4
-50/4
P2 [kW]
NPSH [m]
Eta [%]
Q [m³/h]
Q [l/s]
v [m/s]
TM05 0540 2115

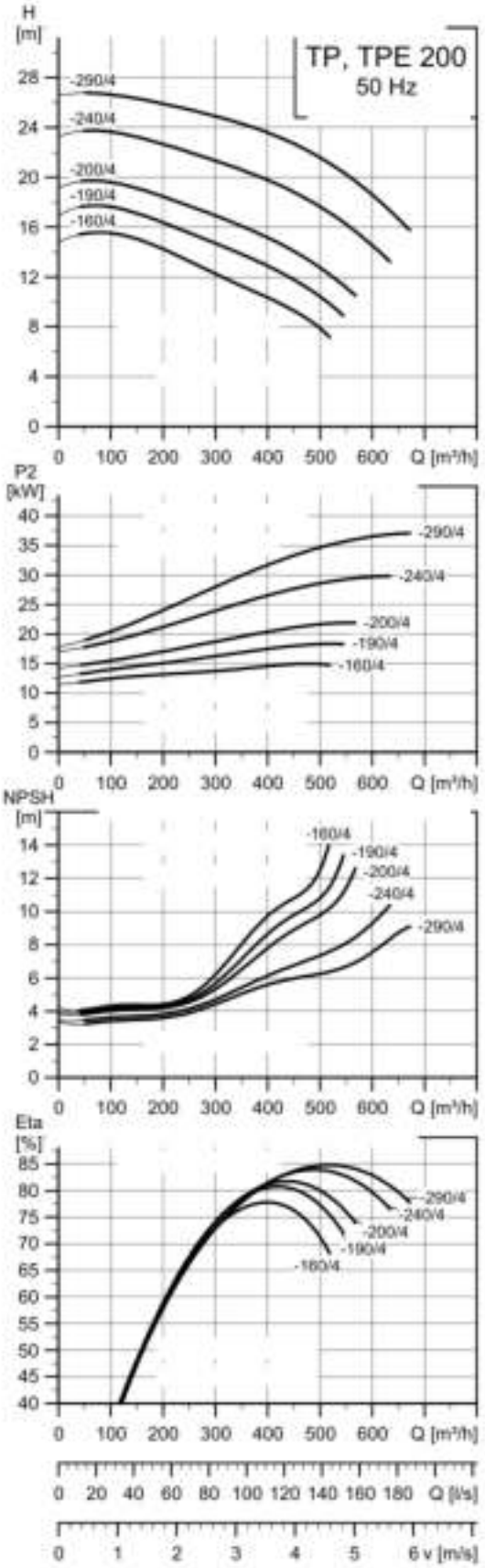
TP, TPE 200
50 Hz
H [m]
-290/4
-240/4
-200/4
-190/4
-160/4
P2 [kW]
NPSH [m]
Eta [%]
Q [m³/h]
Q [l/s]
v [m/s]
TM05 0542 2115

TP, TPE 200-50/4
TP, TPE 200-70/4
TP, TPE 200-90/4
TP, TPE 200-130/4
TP, TPE 200-150/4

TP, TPE 200-160/4
TP, TPE 200-190/4
TP, TPE 200-200/4
TP, TPE 200-240/4
TP, TPE 200-290/4

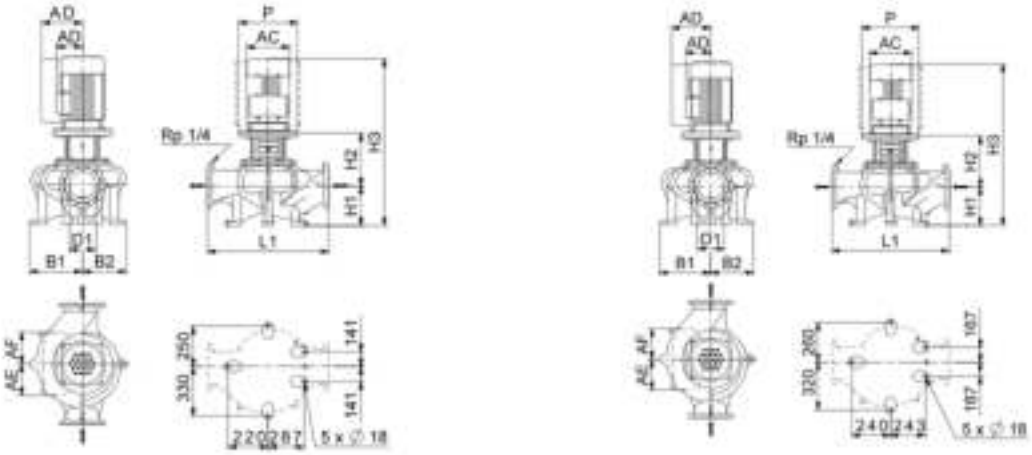

TM05 0663 2614 - TM05 0664 2614

Technical data

TP 200			-50/4	-70/4	-90/4	-130/4	-150/4	-160/4	-190/4	-200/4	-240/4	-290/4
TPD												
TPE			•	•	•	•	•	•	•	• ***	• ***	• ***
TPED												
Series			300	300	300	300	300	300	300	300	300	300
IEC size			***	132	132	160	160	160	180	180	200	225
	1~ TPE											
	3~ TPE		***	132	160	160	160	160	180	180	200	225
P2	1~/3~ TP ★	[kW]	-/4	-/5.5	-/7.5	-/11	-/15	-/15	-/18.5	-/22	-/30	-/37
	1~/3~ TPE	[kW]	-/4	-/5.5	-/7.5	-/11	-/15	-/15	-/18.5	-/22	-/30	-/37
PN			PN 16	PN 16	PN 16	PN 16	PN 16	PN 16/25	PN 16/25	PN 16/25	PN 16/25	PN 16/25
T_{min}-T_{max}		[°C]	[-25;120]	[-25;120]	[-25;120]	[-25;120]	[-25;120]	[-40;140]	[-40;140]	[-40;140]	[-40;140]	[-40;140]
D1		[mm]	200	200	200	200	200	200	200	200	200	200
AC	1~/3~ TP	[mm]	-/220	-/267	-/267	-/322	-/322	-/322	-/368	-/368	-/408	-/449
	1~/3~ TPE	[mm]	-/191	-/255	-/255	-/316	-/316	-/316	-/316	-/368	-/408	-/449
AD	1~/3~ TP	[mm]	-/134	-/167	-/167	-/197	-/197	-/197	-/286	-/286	-/315	-/338
	1~/3~ TPE	[mm]	-/201	-/237	-/237	-/308	-/308	-/308	-/308	-/492	-/480	-/557
AE	1~/3~ TPE	[mm]	-/146	-/173	-/173	-/210	-/210	-/210	-/210	-/126	-/159	-/159
AF	1~/3~ TPE	[mm]	-/146	-/173	-/173	-/210	-/210	-/210	-/210	-/126	-/159	-/159
P		[mm]	250	300	300	350	350	350	350	350	400	450
B1 ★★		[mm]	363/-	363/-	363/-	363/-	363/-	348/-	348/-	348/-	348/-	348/-
B2 ★★		[mm]	283/-	283/-	283/-	283/-	283/-	288/-	288/-	288/-	288/-	288/-
L1		[mm]	900	900	900	900	900	900	900	900	900	900
H1		[mm]	280	280	280	280	280	280	280	280	280	280
H2		[mm]	273	293	293	336	336	331	331	331	331	361
H3	1~/3~ TP	[mm]	-/925	-/945.5	-/984	-/1105	-/1145	-/1061	-/1090	-/1120	-/1256	-/1298
	1~/3~ TPE	[mm]	-/900	-/975	-/975	-/1105	-/1145	-/1061	-/1145	-/1199	-/1256	-/1298

★ TP, TPD pumps are primarily fitted with IE3 motors. See *Motor data* on page 129.

★★ The dimension before the slash applies to the single-head pump, and the dimension afte he twin-head pump.

*** The integrated CUE can be positioned in an angle deviating from this drawing with up to 30 degrees. For further information look in Grundfos Product Center.

TP 200-XXX/4

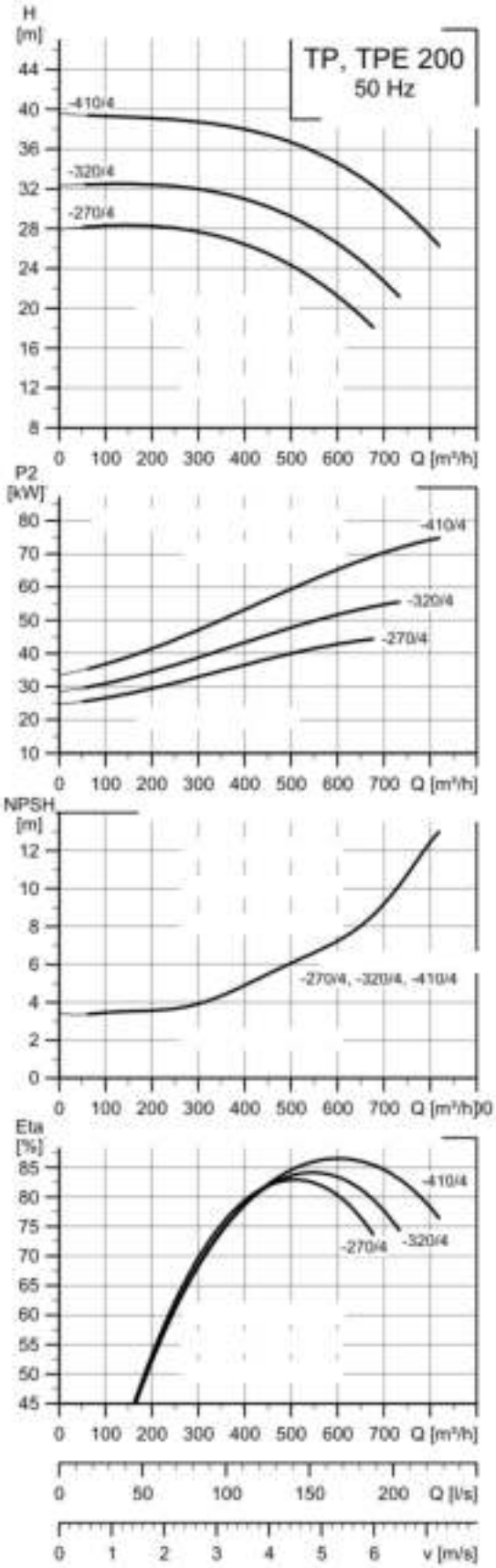

TM03 4850 2115

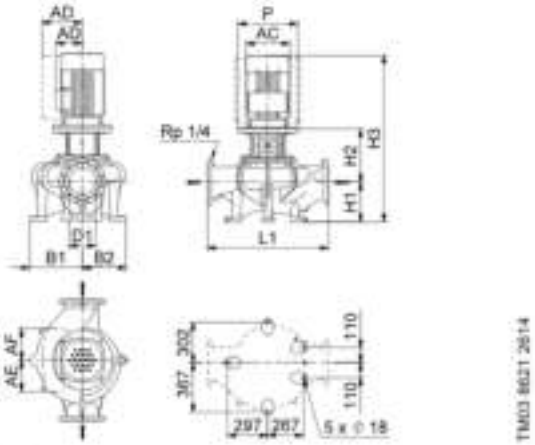

Technical data

TP 200			-270/4	-320/4	-410/4
TPD					—
TPE			- ***	- ***	-
TPED					—
Series			300	300	300
IEC size	[illegible]				—
	[illegible]		225	250	280
	1~ TPE				—
	3~ TPE		225	[illegible]	-
P2	1~/3~ TP ★	[kW]	-/45	-/55	-/75
	1~/3~ TPE	[kW]	-/45	-/55	-
PN			PN 16/25	PN 16/25	PN 16/25
T_{min}-T_{max}		[°C]	[-40;140]	[-40;140]	[-40;140]
D1		[mm]	200	200	200
AC	1~/3~ TP	[mm]	-/449	-/497	-/551
	1~/3~ TPE	[mm]	-/449	-/497	-
AD	1~/3~ TP	[mm]	-/338	-/410	-/433
	1~/3~ TPE	[mm]	-/558	-/614	-
AE	1~/3~ TPE	[mm]	-/159	-/159	-
AF	1~/3~ TPE	[mm]	-/159	-/159	-
P		[mm]	450	550	550
[illegible]		[mm]	393/-	393/-	393/-
B2 ★★		[mm]	328/-	328/-	328/-
L1		[mm]	900	900	900
H1		[mm]	295	295	295
H2		[mm]	377	377	377
H3	1~/3~ TP	[mm]	-/1380	-/1429	-/1492
	1~/3~ TPE	[mm]	-/1380	-/1429	-

★ TP, TPD pumps are primarily fitted with IE3 motors. See *Motor data* on page 129.

★★ The dimension before the slash applies to the single-head pump, and the dimension afte[illegible] he twin-head pump.

★★★ The integrated CUE can be positioned in an angle deviating from this drawing with up to 30 degrees. For further information look in Grundfos Product Center.

TP 200-XXX/4

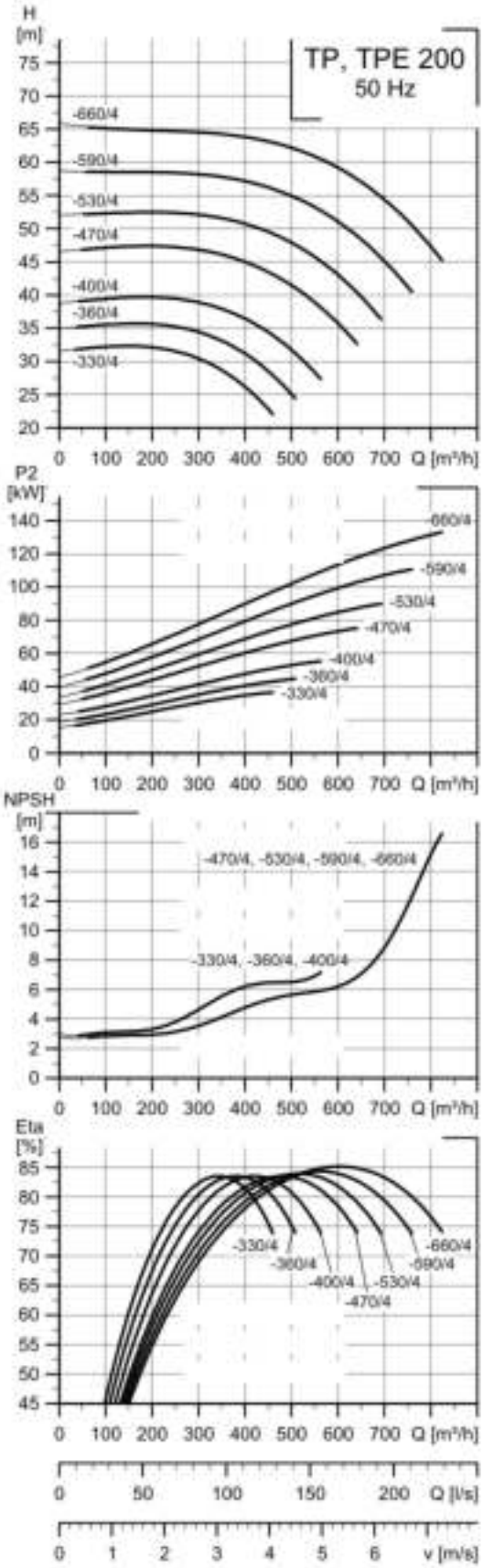
TP, TPE 200
50 Hz
H [m]
-660/4
-590/4
-530/4
-470/4
-400/4
-360/4
-330/4
Q [m³/h]
P2 [kW]
NPSH [m]
-470/4, -530/4, -590/4, -660/4
-330/4, -360/4, -400/4
Eta [%]
Q [l/s]
v [m/s]
TM03 4651 2115

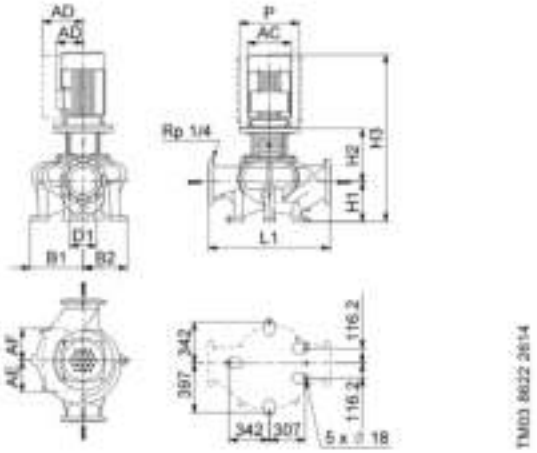

Technical data

TP 200			-330/4	-360/4	-400/4	-470/4	-530/4	-590/4	-660/4
TPD				-		-			—
TPE			- ***	- ***	- ***	-	-	-	-
TPED				-		-			—
Series			300	300	300	300	300	300	300
IEC size				-		-			—
			225	225	250	280	280	315	315
	1~ TPE						-		-
	3~ TPE		225	225	[illegible]				—
P2	1~/3~ TP ★	[kW]	-/37	-/45	-/55	-/75	-/90	-/110	-/132
	1~/3~ TPE	[kW]	-/37	-/45	-/55				-
PN			PN 16/25	PN 16/25	PN 16/25	PN 16/25	PN 16/25	PN 16/25	PN 16/25
T_{min}-T_{max}		[°C]	[-40;140]	[-40;140]	[-40;140]	[-40;140]	[-40;140]	[-40;140]	[-40;140]
D1		[mm]	200	200	200	200	200	200	200
AC	1~/3~ TP	[mm]	-/449	-/449	-/497	-/551	-/551	-/616	-/616
	1~/3~ TPE	[mm]	-/449	-/449	-/497				-
AD	1~/3~ TP	[mm]	-/338	-/338	-/410	-/433	-/433	-/515	-/515
	1~/3~ TPE	[mm]	-/600	-/597	-/600	-			—
AE	1~/3~ TPE	[mm]	-/159	-/159	-/159	-			—
AF	1~/3~ TPE	[mm]	-/159	-/159	-/159				-
P		[mm]	450	450	550	550	550	660	660
B1 ★★		[mm]	423/-	423/-	423/-	423/-	423/-	423/-	423/-
B2 ★★		[mm]	368/-	368/-	368/-	368/-	368/-	368/-	368/-
L1		[mm]	1000	1000	1000	1000	1000	1000	1000
H1		[mm]	295	295	295	295	295	295	295
H2		[mm]	382	382	382	382	382	412	412
H3	1~/3~ TP	[mm]	-/1325	-/1385	-/1424	-/1497	-/1607	-/1619	-/1784
	1~/3~ TPE	[mm]	-/1325	-/1385	-/1424				-

★ TP, TPD pumps are primarily fitted with IE3 motors. See *Motor data* on page 129.

★★ The dimension before the slash applies to the single-head pump, and the dimension afte he twin-head pump.

★★★ The integrated CUE can be positioned in an angle deviating from this drawing with up to 30 degrees. For further information look in Grundfos Product Center.

TP 300-XXX/4

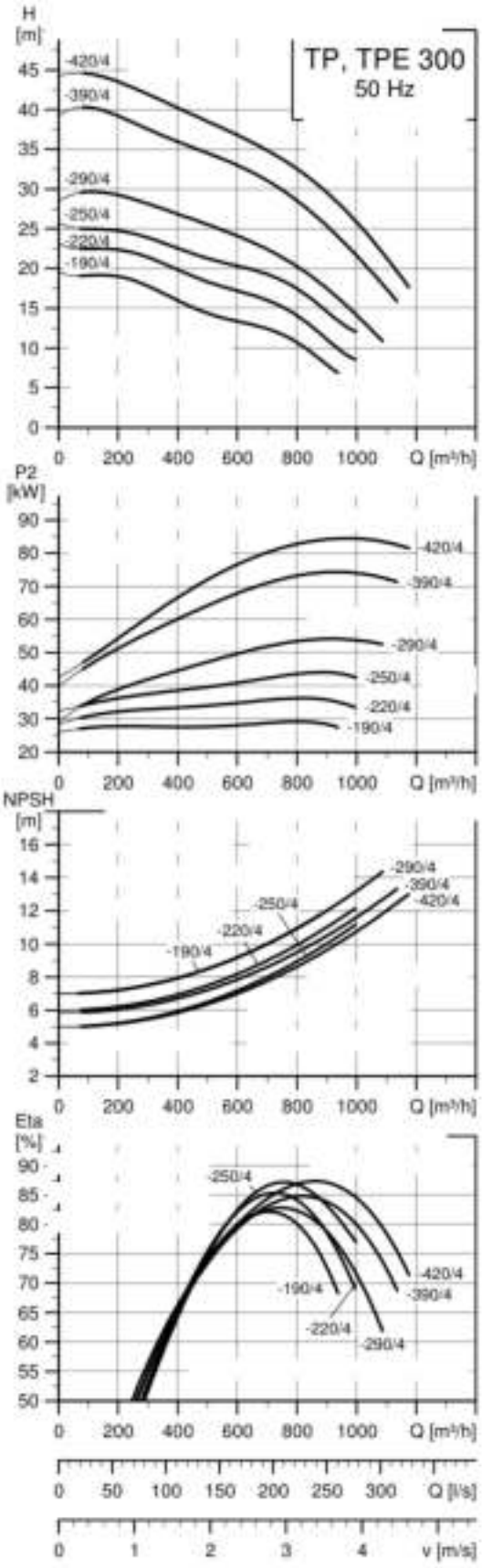
TP, TPE 300
50 Hz
H [m]
-420/4
-390/4
-290/4
-250/4
-220/4
-190/4
P2 [kW]
NPSH [m]
Eta [%]
Q [m³/h]
Q [l/s]
v [m/s]
TM06 6593 4217

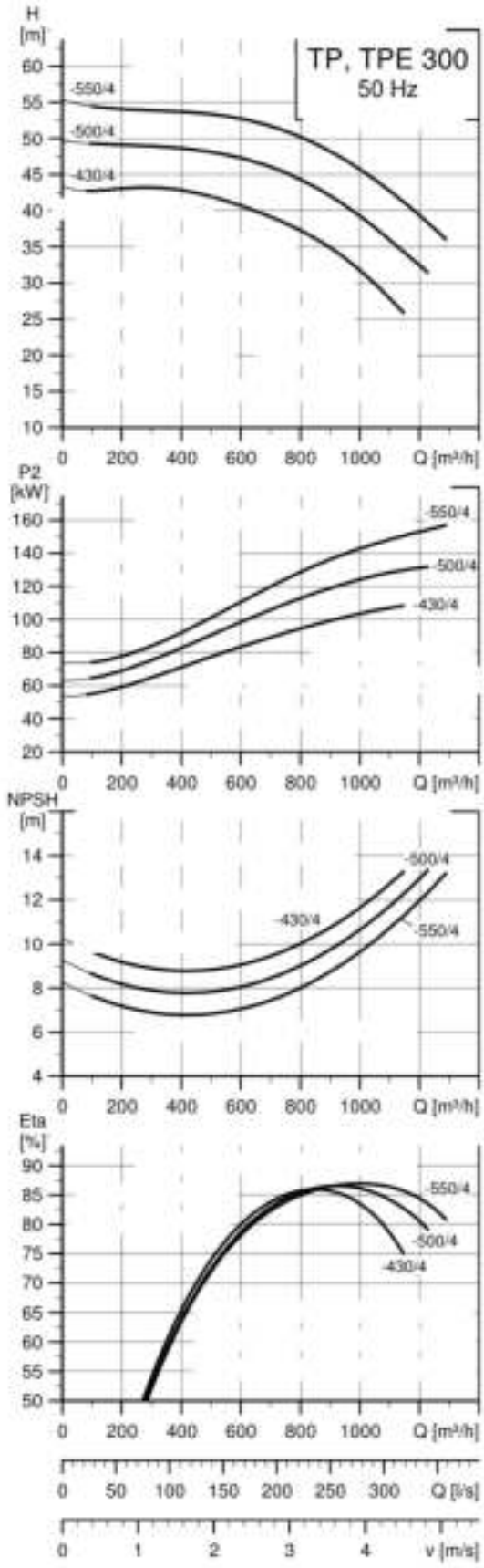
TP, TPE 300
50 Hz
H [m]
-550/4
-500/4
-430/4
P2 [kW]
NPSH [m]
Eta [%]
Q [m³/h]
Q [l/s]
v [m/s]
TM06 6620 4217

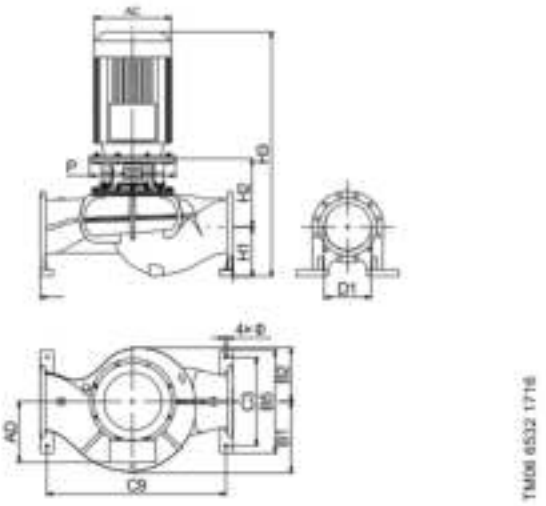

Technical data

TP 300			-190/4	-220/4	-250/4	-290/4	-390/4	-420/4	-430/4	-500/4	-550/4
TPD											
TPE			- **	- **	- **	- **	-	-	-	-	-
TPED											
Series			300	300	300	300	300	300	300	300	300
IEC size	- TPD										
	- TPE		200L	225S	225M	250M	280S	280M	315S	315M	315M
	1~ TPE										-
	3~ TPE		200L	225S	225M	[illegible]					
P2	3~ TP ★	[kW]	30	[illegible]	[illegible]	[illegible]	[illegible]	90	110	132	160
	3~ TPE	[kW]	30	[illegible]	[illegible]	55					
PN			PN16/25	PN16/25	PN16/25	PN16/25	PN16/25	PN16/25	PN16/25	PN16/25	PN16/25
T_{min}-T_{max}		[°C]	[-40;150]	[-40;150]	[-40;150]	[-40;150]	[-40;150]	[-40;150]	[-40;150]	[-40;150]	[-40;150]
D1		[mm]	300	300	300	300	300	300	300	300	300
AC	1~/3~ TP	[mm]	-/402	-/442	-/442	-/495	-/555	-/555	-/610	-/610	-/610
	1~/3~ TPE	[mm]	-/402	-/442	-/442	-/495	-				
AD	1~/3~ TP	[mm]	-/305	-/325	-/325	-/392	-/432	-/432	-/495	-/495	-/495
	1~/3~ TPE	[mm]	-/511	-/560	-/561	-/600					
P		[mm]	394	450	450	550	550	550	660	660	660
B1		[mm]	438	438	438	460	460	460	438	438	438
B2		[mm]	320	320	320	345	345	345	338	338	338
B5		[mm]	663	663	663	663	663	663	666	666	666
C3		[mm]	570	570	570	570	570	570	570	570	570
C9		[mm]	1150	1150	1150	1150	1150	1150	1150	1150	1150
L1		[mm]	1240	1240	1240	1240	1240	1240	1240	1240	1240
H1		[mm]	348	348	348	317	[illegible]	[illegible]	340	340	340
H2		[mm]	393	423	423	438	443	443	460	460	455
H3		[mm]	1400	1420	1480	1572	1580	1690	1732	1892	1892
Ø		[mm]	20	[illegible]	[illegible]	[illegible]	[illegible]	[illegible]	[illegible]	[illegible]	[illegible]

★ TP, TPD pumps are primarily fitted with IE3 motors. See *Motor data* on page 129.

** The integrated CUE can be positioned in an angle deviating from this drawing with up to 30 degrees. For further information look in Grundfos Product Center.

TP 350-XXX/4

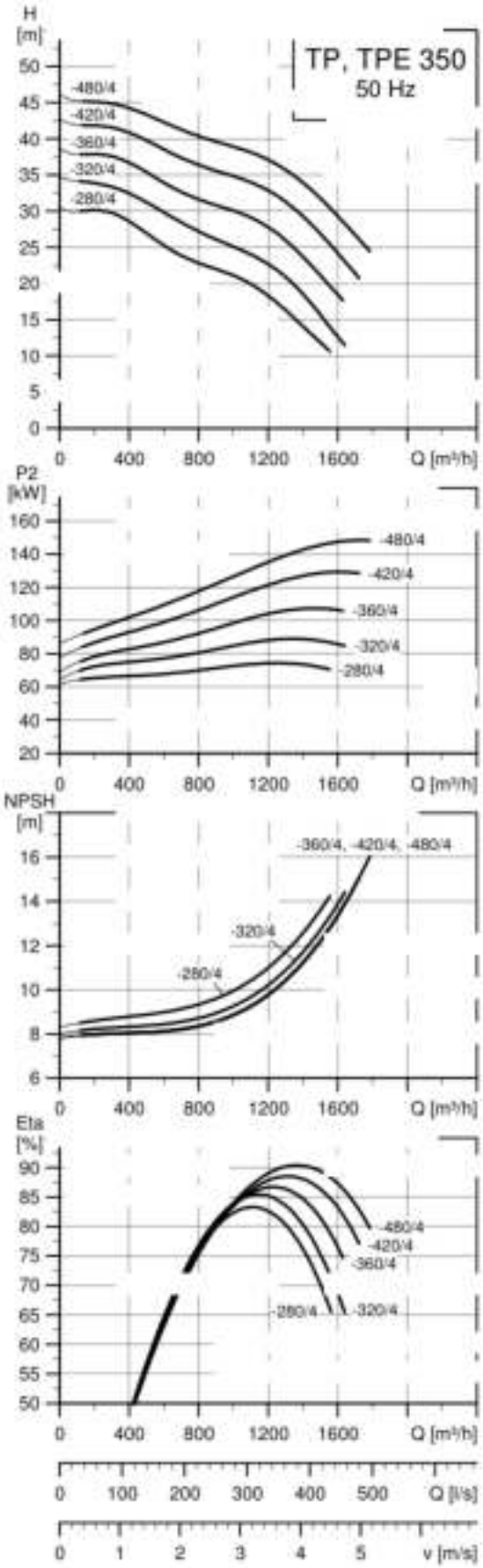
TP, TPE 350
50 Hz
H [m]
-480/4
-420/4
-360/4
-320/4
-280/4
P2 [kW]
NPSH [m]
-360/4, -420/4, -480/4
-320/4
-280/4
Eta [%]
Q [m³/h]
Q [l/s]
v [m/s]
TM06 6594 4217

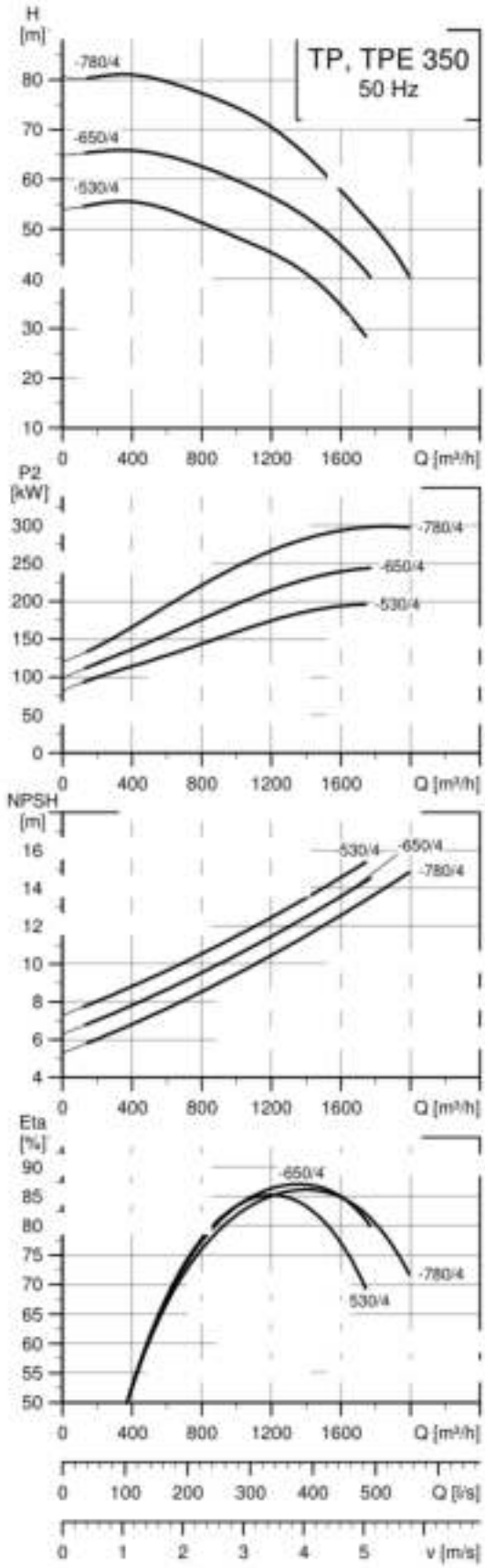
TP, TPE 350
50 Hz
H [m]
-780/4
-650/4
-530/4
P2 [kW]
NPSH [m]
Eta [%]
Q [m³/h]
Q [l/s]
v [m/s]
TM06 6621 4217

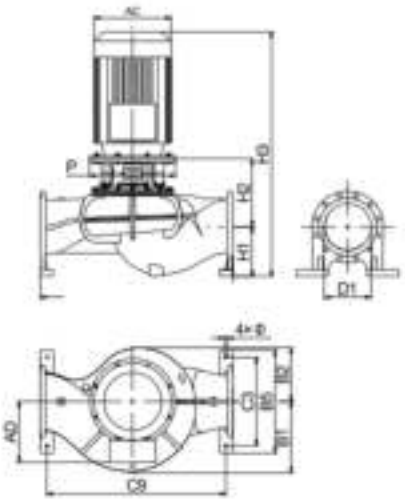

TM06 6532 1716

Technical data

TP 350			-280/4	-320/4	-360/4	-420/4	-480/4	-530/4	-650/4	-780/4
TPD										–
TPE										–
TPED										
Series			300	300	300	300	300	300	300	300
IEC size			280S	280M	315S	315M	315M	315L	315L	315L
	1~ TPE									–
	3~ TPE									
P2	3~ TP ★	[kW]	75	90	110	132	160	200	250	315
	3~ TPE	[kW]	-							–
PN			PN16/25	PN16/25	PN16/25	PN16/25	PN16/25	PN16/25	PN16/25	PN16/25
T_{min};T_{max}		[°C]	[-40;150]	[-40;150]	[-40;150]	[-40;150]	[-40;150]	[-40;150]	[-40;150]	[-40;150]
D1		[mm]	350	350	350	350	350	350	350	350
AC	1~/3~ TP	[mm]	555	555	610	610	-/610	-/610	-/702	-/702
	1~/3~ TPE	[mm]	-							–
AD	1~/3~ TP	[mm]	432	432	495	495	-/495	-/495	-/619	-/619
	1~/3~ TPE	[mm]	-							–
P		[mm]	550	550	660	660	660	798	798	798
B1		[mm]	521	521	521	521	521	475	475	475
B2		[mm]	373	373	373	373	373	374	374	374
B5		[mm]	735	735	735	735	735	740	740	740
C3		[mm]	660	660	660	660	660	660	660	660
C9		[mm]	1310	1310	1310	1310	1310	1310	1310	1310
L1		[mm]	1400	1400	1400	1400	1400	1400	1400	1400
H1		[mm]	361	361	361	361	361	385	385	385
H2		[mm]	509	509	509	509	509	514	519	519
H3		[mm]	1689	1799	1802	1962	1962	2259	2272	2272
Ø		[mm]	20	^^	^^	^^	^^	20	^^	^^

★ TP, TPD pumps are primarily fitted with IE3 motors. See Motor data on page 129.

TP 400-XXX/4

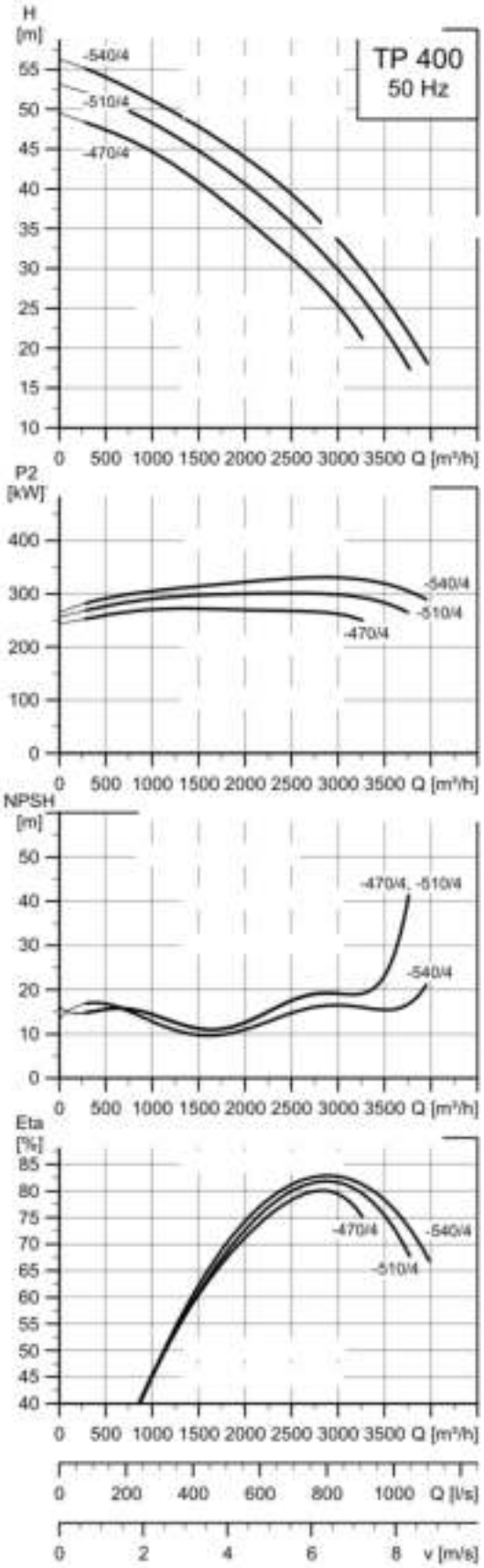
TP 400
50 Hz
H [m]
-540/4
-510/4
-470/4
Q [m³/h]
P2 [kW]
NPSH [m]
-470/4, -510/4
-540/4
Eta [%]
Q [l/s]
v [m/s]
TM02 6848 3615

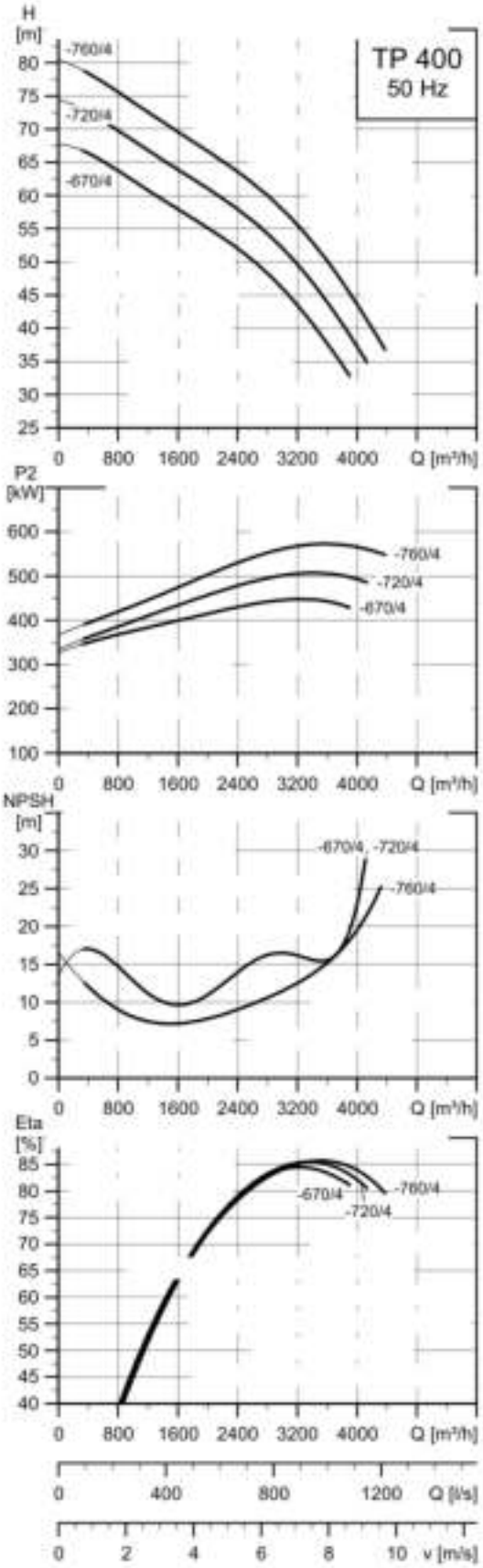
TP 400
50 Hz
H [m]
-760/4
-720/4
-670/4
Q [m³/h]
P2 [kW]
NPSH [m]
-670/4, -720/4
-760/4
Eta [%]
Q [l/s]
v [m/s]
TM02 6849 3615

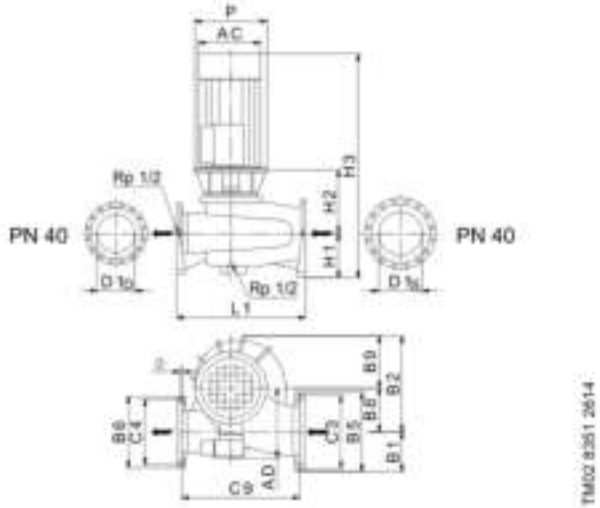

Technical data

TP 400			470/4	-510/4	-540/4	-670/4	-720/4	-760/4
TPD								
TPE								
TPED								
Series			400	400	400	400	400	400
IEC size	1~ TP							
	3~ TP		315	355	355	355	400	400
	1~ TPE							-
	3~ TPE							-
P2		[kW]	315	355	400	500	560	630
PN			PN 25	PN 25	PN 25	PN 25	PN 25	PN 25
T_{min};T_{max}		[°C]	[0;150]	[0;150]	[0;150]	[0;150]	[0;150]	[0;150]
$D1_D/D1_S$		[mm]	400/500	400/500	400/500	400/500	400/500	400/500
AC		[mm]	625	790	790	790	880	880
AD		[mm]	608	725	725	875	925	925
C9		[mm]	1150	900	900	900	1150	1150
C4		[mm]	448	448	448	448	448	448
C3		[mm]	1064	1064	1064	1064	1064	1064
B5		[mm]	895	895	895	895	895	895
B6		[mm]	800	800	800	800	800	800
B7		[mm]	1066	1066	1066	1066	1066	1066
B8		[mm]	500	500	500	500	500	500
B9		[mm]	564	564	564	564	564	564
C2		[mm]	830	830	830	830	830	830
C1		[mm]	735	735	735	735	735	735
C0		[mm]	1302	1302	1302	1302	1302	1302
C		[mm]	27	27	**	**	**	**
L1		[mm]	1400	1400	1400	1400	1400	1400
L2		[mm]	450	450	450	450	450	450
H2		[mm]	706	706	706	706	706	706
H3		[mm]	2522	2611	2611	2611	2771	2771

TP, TPD, TPE, TPED, 6-pole, PN 16

TP, TPD 125-XXX/6

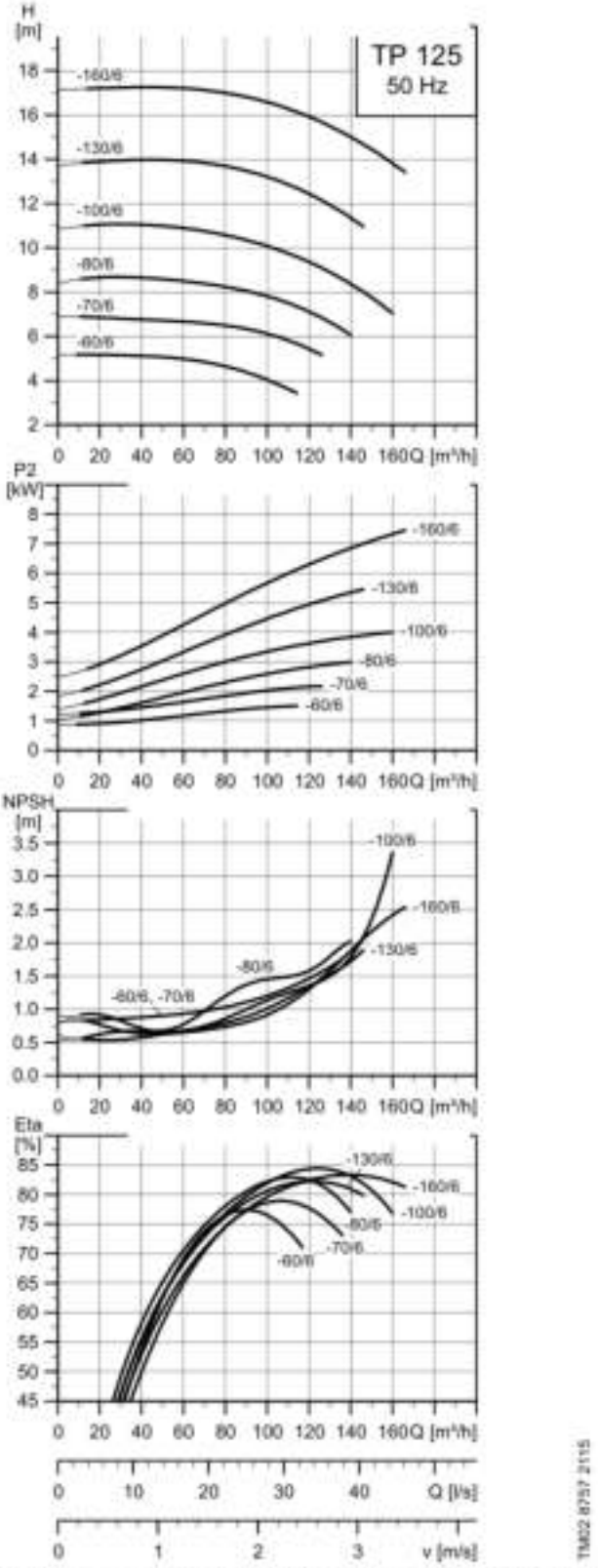

Note: All curves apply to single-head pumps. For further information, see page 167.

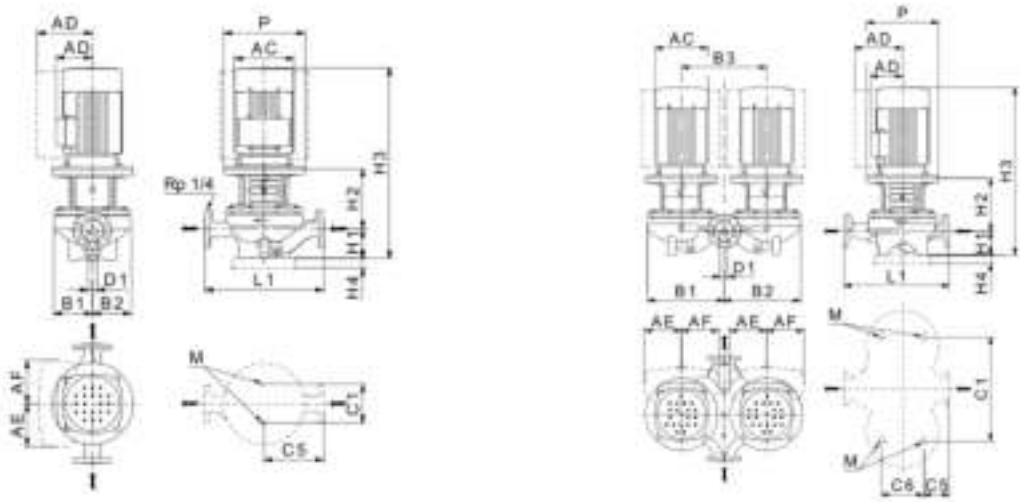

TM03 5348 2814 - TM03 5349 2814

Technical data

TP 125			-60/6	-70/6	-80/6	-100/6	-130/6	-160/6
TPD			-	-	-	-	-	-
TPE								
TPED				-	-	-	-	-
Series			300	300	300	300	300	300
IEC size	3~ TP		[illegible]	112	132	132	132	160
	1~ TPE							
	3~ TPE							
P2	1~/3~ TP	[kW]	-/1.5	-/2.2	-/3	-/4	-/5.5	-/7.5
	1~/3~ TPE	[kW]	-	-	-	-	-	-
PN			PN 16	PN 16	PN 16	PN 16	PN 16	PN 16
T_{min}/T_{max}		[°C]	[-25;120]	[-25;120]	[-25;120]	[-25;120]	[-25;120]	[-25;120]
D1		[mm]	125	125	125	125	125	125
AC	1~/3~ TP	[mm]	-/198	-/222	-/262	-/262	-/262	-/262
	1~/3~ TPE	[mm]	-	-	-	-	-	-
AD	1~/3~ TP	[mm]	-/166	-/177	-/202	-/202	-/202	-/237
	1~/3~ TPE	[mm]						
AE	1~/3~ TPE	[mm]	-					
AF	1~/3~ TPE	[mm]	-	-	-	-	-	-
P		[mm]	250	250	300	300	300	350
B1 ★★		[mm]	250/537	250/537	244/537	244/537	273/568	273/568
B2 ★★		[mm]	202/518	202/518	220/516	220/516	236/545	236/545
B3		[mm]	600	600	600	600	600	600
C1 ★★		[mm]	230/680	230/680	230/680	230/680	230/680	230/680
C5 ★★		[mm]	310/84	310/84	400/175	400/175	400/175	400/175
C6		[mm]	300	300	350	350	350	350
L1		[mm]	620	620	800	800	800	800
H1		[mm]	215	215	215	215	215	215
H2		[mm]	267	267	286	286	282	312
H3	1~/3~ TP	[mm]	-/818	-/836	-/885	-/885	-/932	-/1021
	1~/3~ TPE	[mm]	-					—
H4		[illegible]						
M			M16	M16	M16	M16	M16	M16

★★ The dimension before the slash applies to the single-head pump, and the dimension afte he twin-head pump.

TP, TPD 150-XXX/6

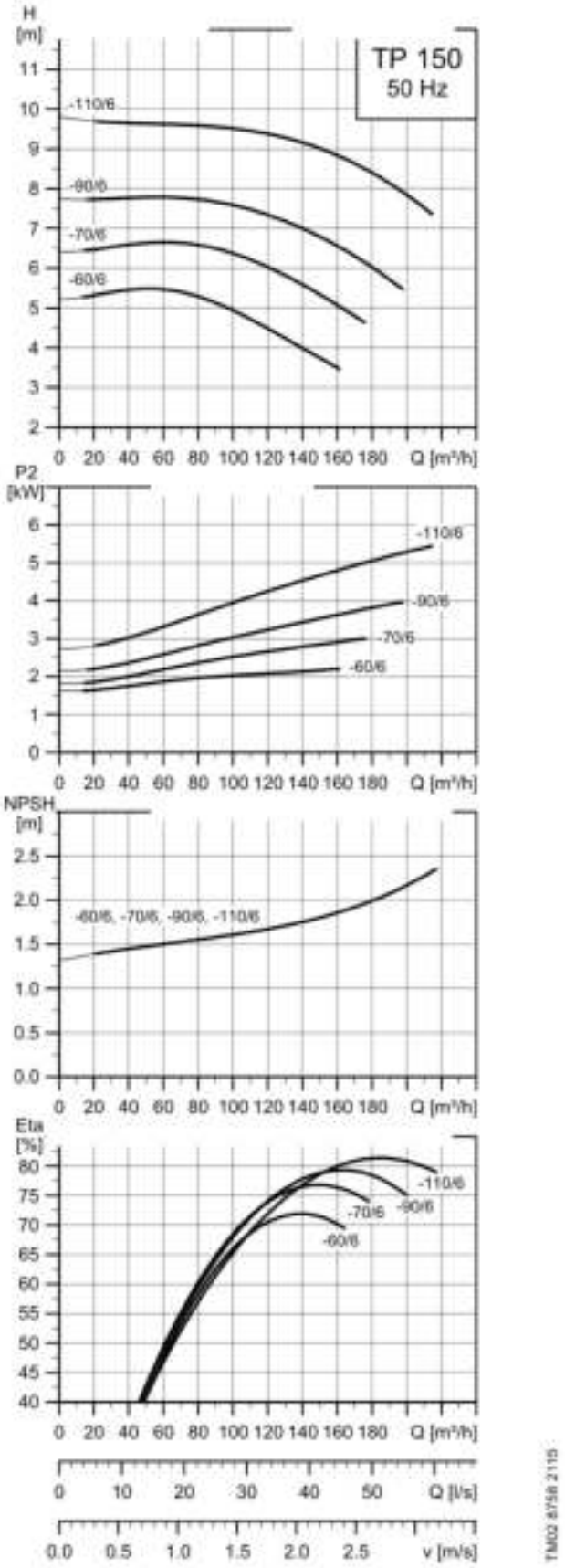

Note: All curves apply to single-head pumps. For further information, see page 167.

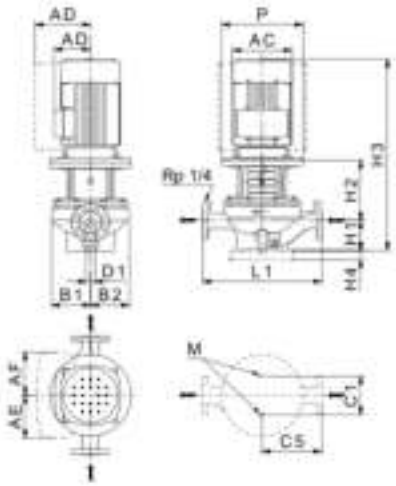

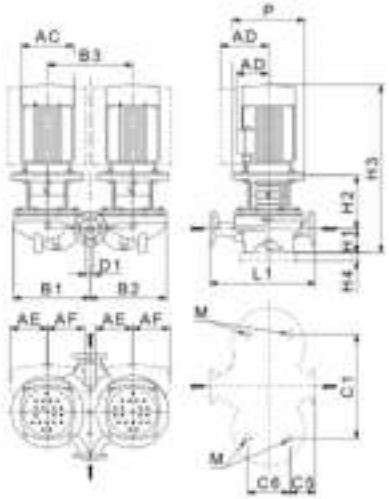

TM03 5348 2614 - TM03 5349 2614

Technical data

TP 150			-60/6	-70/6	-90/6	-110/6
TPD			*	*	*	*
[illegible]						
TPED						
Series			300	300	300	300
IEC size	[illegible]		[illegible]	132	132	132
	1~ TPE					
	3~ TPE					
P2	1~/3~ TP	[kW]	-/2.2	-/3	-/4	-/5.5
	1~/3~ TPE	[kW]	-			
PN			PN 16	PN 16	PN 16	PN 16
T_{min}-T_{max}		[°C]	[-25;120]	[-25;120]	[-25;120]	[-25;120]
D1		[mm]	150	150	150	150
AC	1~/3~ TP	[mm]	-/222	-/262	-/262	-/262
	1~/3~ TPE	[mm]	-			
AD	1~/3~ TP	[mm]	-/177	-/202	-/202	-/202
	1~/3~ TPE	[mm]	-			
AE	1~/3~ TPE	[mm]	-			
AF	1~/3~ TPE	[mm]	-			
P		[mm]	250	300	300	300
[illegible]		[mm]	296/583	296/583	296/583	296/583
B2 ★★		[mm]	237/553	237/553	237/553	237/553
B3		[mm]	600	600	600	600
[illegible]		[mm]	230/680	230/680	230/680	230/680
C5 ★★		[mm]	400/153	400/153	400/153	400/153
C6		[mm]	350	350	350	350
L1		[mm]	800	800	800	800
H1		[mm]	215	215	215	215
H2		[mm]	275	291	291	291
H3	1~/3~ TP	[mm]	-/845	-/853	-/891	-/942
	1~/3~ TPE	[mm]	-			
H4		[mm]	[illegible]			
M			M16	M16	M16	M16

★★ The dimension before the slash applies to the single-head pump, and the dimension afte he twin-head pump.

27. Minimum efficiency index

Minimum efficiency index, MEI, means the dimensionless scale unit for hydraulic pump efficiency at best efficiency point, part load and overload. The Commission Regulation, EU, sets efficiency requirements to MEI greater than or equal to 0.10 as from 1 January 2013 and MEI greater than or equal to 0.40 as from 1 January 2015. An indicative benchmark for the best-performing water pump available on the market as from 1 January 2013 is determined in the regulation.

- The benchmark for the most efficient water pumps is MEI greater than or equal to 0.70.
- The efficiency of a pump with a trimmed impeller is usually lower than that of a pump with the full impeller diameter. The trimming of the impeller will adapt the pump to a fixed duty point, leading to reduced energy consumption. The minimum efficiency index, MEI, is based on the full impeller diameter.
- The operation of this water pump with variable duty points may be more efficient and economic when controlled, for example, by the use of a variable-speed drive that matches the pump duty to the system.
- Information on benchmark efficiency is available at http://europump.eu/efficiencycharts.

TPE2, TPE2 D, TPE3, TPE3 D

TPE2, TPE2 D, TPE3, TPE3 D	P2 [kW]	Nominal impeller size / actual impeller size	Trimmed impeller	Maximum impeller	MEI
TPE2, TPE2 D, TPE3, TPE3 D	* *		-	-	≥ 0.70

TP, TPD, TPE, TPED, 2-pole, PN 6, 10, 16

TP Series 100, 2-pole	P2 [kW]	Nominal impeller size / actual impeller size	Trimmed impeller	Maximum impeller	MEI
TP, TPE 25-50/2	0.12			-	*
TP, TPE 25-80/2	0.18			-	< 0.55
TP, TPE 25-90/2	0.37		-	-	≥ 0.70
TP, TPE 32-50/2	0.12			-	*
TP, TPE 32-80/2	0.25			-	≥ 0.70
TP, TPE 32-90/2	0.37			-	≥ 0.70
TP, TPE 40-50/2	0.12			-	*
TP, TPE 40-80/2	0.25			-	≥ 0.70
TP, TPE 40-90/2	0.37		-	-	≥ 0.70

* Not in MEI classification because flow rate at best efficiency point is less than 6 m^3/h.

TP Series 200, 2-pole	P2 [kW]	Nominal impeller size / actual impeller size	Trimmed impeller	Maximum impeller	MEI
TP, TPD 32-60/2	0.25			-	≥ 0.56
TP, TPD 32-120/2	0.37		-	-	≥ 0.40
TP, TPD 32-150/2	0.37	32-136 / 111	-		
TP, TPD 32-180/2	0.55	32-136 / 118	-		≥ 0.64
TP, TPD 32-230/2	0.75	32-136 / 136		-	
TP, TPD 40-60/2	0.25			-	≥ 0.70
TP, TPD 40-120/2	0.37			-	≥ 0.70
TP 40-180/2	0.55			-	≥ 0.70
TP, TPD 40-190/2	0.75			-	≥ 0.44
TP, TPD 40-230/2	1.1			-	≥ 0.61
TP, TPD 40-270/2	1.5			-	≥ 0.70
TP, TPD 50-60/2	0.37			-	≥ 0.60
TP, TPD 50-120/2	0.75			-	≥ 0.45
TP, TPD 50-180/2	0.75			-	≥ 0.70
TP, TPD 65-60/2	0.55			-	≥ 0.70
TP, TPD 65-120/2	* *			-	≥ 0.59
TP, TPD 65-180/2	1.5			-	≥ 0.70
TP, TPD, TPE, TPED 80-120/2	1.5			-	≥ 0.70
TP, TPD, TPE, TPED 100-120/2	2.2			-	≥ 0.70

TP Series 300, 2-pole	P2 [kW]	Nominal impeller size / actual impeller size	Trimmed impeller	Maximum impeller	MEI
TP, TPD 32-200/2	3.7	32-160.1 / 129	-		
TP, TPD, TPE, TPED 32-250/2	4.0	32-160.1 / 140	-		≥ 0.70
TP, TPD, TPE, TPED 32-320/2	5.5	32-160.1 / 155	-		
TP, TPD, TPE, TPED 32-380/2	-	32-160.1 / 169		-	
TP, TPD, TPE, TPED 32-460/2	4	32-200.1 / 188	-		≥ 0.50
TP, TPD, TPE, TPED 32-580/2	5.5	32-200.1 / 205		-	
TP, TPD 40-240/2	3.7	32-160 / 137	-		
TP, TPD, TPE, TPED 40-300/2	-	32-160 / 151	-		≥ 0.52
TP, TPD, TPE, TPED 40-360/2	4	32-160 / 163		-	
TP, TPD, TPE, TPED 40-430/2	5.5	32-200 / 186	-		
TP, TPD, TPE, TPED 40-530/2	7.5	32-200 / 202	-		≥ 0.70
TP, TPD, TPE, TPED 40-630/2	11	32-200 / 219		-	
TP, TPD 50-160/2	2.2	32-125 / 110	-		
TP, TPD 50-190/2	4.0	32-125 / 120	-		≥ 0.70
TP, TPD 50-240/2	5.5	32-125 / 130	-		
TP, TPD, TPE, TPED 50-290/2	-	32-125 / 142		-	
TP, TPD, TPE, TPED 50-360/2	4	32-160 / 163	-		≥ 0.70
TP, TPD, TPE, TPED 50-430/2	5.5	32-160 / 177		-	
TP, TPD, TPE, TPED 50-420/2	7.5	40-200 / 187	-		
TP, TPD, TPE, TPED 50-540/2	11	40-200 / 207	-		≥ 0.57
TP, TPD, TPE, TPED 50-630/2	15	40-200 / 210		-	
TP, TPD, TPE, TPED 50-710/2	15	40-250 / 230	-		
TP, TPD, TPE, TPED 50-830/2	18.5	40-250 / 245	-		≥ 0.70
TP, TPD, TPE, TPED 50-900/2	22	40-250 / 255		-	
TP, TPD, TPE, TPED 65-170/2	3.7	40-125 / 116	-		
TP, TPD, TPE, TPED 65-210/2	-	40-125 / 127	-		≥ 0.70
TP, TPD, TPE, TPED 65-250/2	4	40-125 / 138		-	
TP, TPD, TPE, TPED 65-340/2	5.5	40-160 / 158	-		≥ 0.70
TP, TPD, TPE, TPED 65-410/2	7.5	40-160 / 172		-	
TP, TPD, TPE, TPED 65-460/2	11	50-200 / 185	-		
TP, TPD, TPE, TPED 65-550/2	15	50-200 / 200	-		≥ 0.53
TP, TPD, TPE, TPED 65-660/2	18.5	50-200 / 219		-	
TP, TPD, TPE, TPED 65-720/2	22	50-250 / 230	-		≥ 0.70
TP, TPD, TPE 65-930/2	30	50-250 / 257		-	
TP, TPD 80-140/2	3.7	50-125 / 105	-		
TP, TPD, TPE, TPED 80-180/2	-	50-125 / 115	-		≥ 0.69
TP, TPD, TPE, TPED 80-210/2	4	50-125 / 125	-		
TP, TPD, TPE, TPED 80-240/2	5.5	50-125 / 135		-	
TP, TPD, TPE, TPED 80-250/2	7.5	65-160 / 145	-		
TP, TPD, TPE, TPED 80-330/2	11	65-160 / 157	-		≥ 0.68
TP, TPD, TPE, TPED 80-400/2	15	65-160 / 173		-	
TP, TPD, TPE, TPED 80-520/2	18.5	65-200 / 190	-		
TP, TPD, TPE, TPED 80-570/2	22	65-200 / 200	-		≥ 0.70
TP, TPD, TPE 80-700/2	30	65-200 / 219		-	
TP, TPD, TPE, TPED 100-160/2	4	65-125 / 120-110	-		
TP, TPD, TPE, TPED 100-200/2	5.5	65-125 / 127	-		≥ 0.58
TP, TPD, TPE, TPED 100-240/2	7.5	65-125 / 137		-	
TP, TPD, TPE, TPED 100-250/2	11	80-160 / 147-127	-		
TP, TPD, TPE, TPED 100-310/2	15	80-160 / 153	-		≥ 0.70
TP, TPD, TPE, TPED 100-360/2	18.5	80-160 / 163	-		
TP, TPD, TPE, TPED 100-390/2	22	80-160 / 169		-	
TP, TPD, TPE 100-480/2	30	80-200 / 200		-	< 0.65
TP, TPE 125-310/2	22	125-176 / 166	-		≥ 0.70
TP, TPE 125-360/2	30	125-176 / 174		-	

TP, TPD, TPE, TPED, 4-pole, PN 6, 10, 16

TP Series 200, 4-pole	P2 [kW]	Nominal impeller size / actual impeller size	Trimmed impeller	Maximum impeller	MEI
TP, TPD 32-30/4	0.12	—		-	*
TP, TPD 32-40/4	0.25			-	
TP, TPD 32-60/4	0.25			-	
TP, TPD 40-30/4	0.12			-	≥ 0.70
TP 40-60/4	0.25			-	≥ 0.70
TP, TPD 40-90/4	0.25			-	≥ 0.70
TP, TPD 50-30/4	0.25	—		-	≥ 0.70
TP, TPD 50-60/4	0.37			-	≥ 0.70
TP, TPD 65-30/4	0.25			-	≥ 0.70
TP, TPD 65-60/4	0.55			-	≥ 0.70
TP, TPD 80-30/4	0.37			-	≥ 0.70
TP, TPD 80-60/4	0.75			-	≥ 0.70
TP, TPD 100-30/4	0.55		—	-	≥ 0.45

* Not in MEI classification because flow rate at best efficiency point is less than 6 m^3/h.

TP Series 300, 4-pole	P2 [kW]	Nominal impeller size / actual impeller size	Trimmed impeller	Maximum impeller	MEI
TP, TPD 32-80/4	0.25	32-160.1 / 152	-		
TP, TPD 32-100/4	0.37	32-160.1 / 16[illegible]		-	≥ 0.70
TP, TPD 32-120/4	0.55	32-200.1 / 19[illegible]		-	< 0.69
TP, TPD 40-100/4	0.55	32-160 / 169	—	-	≥ 0.40
TP, TPD 40-110/4	0.75	32-200 / 194	-		
TP, TPD 40-140/4	1.1	32-200 / 212		-	≥ 0.70
TP, TPD 50-90/4	0.55	32-160 / 169		-	≥ 0.50
TP, TPD 50-80/4	0.75	40-200 / 176	-		
TP, TPD 50-120/4	[illegible]	40-200 / 198	-		≥ 0.70
TP, TPD 50-140/4	[illegible]	40-200 / 215		-	
TP, TPD 50-190/4	[illegible]	40-250 / 240	-		
TP, TPD 50-230/4	[illegible]	40-250 / 260		-	≥ 0.70
TP, TPD 65-90/4	0.75	40-160 / 166		-	≥ 0.70
TP, TPD 65-110/4	[illegible]	50-200 / 180	-		
TP, TPD 65-130/4	[illegible]	50-200 / 190	-		≥ 0.70
TP, TPD 65-150/4	[illegible]	50-200 / 210	-		
TP, TPD 65-170/4	-	50-200 / 219		-	
TP, TPD, TPE, TPED 65-240/4	-	50-250 / 263		-	≥ 0.70
TP, TPD 80-70/4	- -	65-160 / 149	-		
TP, TPD 80-90/4	[illegible]	65-160 / 165	-		≥ 0.68
TP, TPD 80-110/4	[illegible]	65-160 / 177		-	
TP, TPD, TPE, TPED 80-150/4	-	65-200 / 205	-		≥ 0.70
TP, TPD, TPE, TPED 80-170/4	4	65-200 / 219		-	
TP, TPD, TPE, TPED 80-240/4	5.5	65-250 / 263		-	< 0.60
TP, TPD, TPE, TPED 80-270/4	7.5	65-315 / 279	-		≥ 0.70
TP, TPD, TPE, TPED 80-340/4	11	65-315 / 309		-	
TP, TPD, TPE, TPED 100-65/4	- -	80-160 / 146	-		
TP, TPD, TPE, TPED 100-70/4	[illegible]	80-160 / 150	-		≥ 0.70
TP, TPD, TPE, TPED 100-90/4	[illegible]	80-160 / 161	-		
TP, TPD, TPE, TPED 100-110/4	-	80-160 / 177		-	
TP, TPD, TPE, TPED 100-130/4	4	80-200 / 200	-		≥ 0.70
TP, TPD, TPE, TPED 100-170/4	5.5	80-200 / 222		-	
TP, TPD, TPE, TPED 100-200/4	7.5	80-250 / 240	-		≥ 0.45
TP, TPD, TPE, TPED 100-250/4	11	80-250 / 270		-	
TP, TPD, TPE, TPED 100-330/4	15	80-315 / 299	-		
TP, TPD, TPE, TPED 100-370/4	18.5	80-315 / 320	-		≥ 0.69
TP, TPD, TPE 100-410/4	22	80-315 / 334		-	
TP, TPE 125-60/4	[illegible]	100-160 / 160-140	-		
TP, TPE 125-80/4	-	100-160 / 172	-		≥ 0.70
TP, TPE 125-95/4	-	100-160 / 176		-	
TP, TPD, TPED 125-110/4	4	100-200 / 180	-		
TP, TPD, TPED 125-130/4	5.5	100-200 / 197	-		≥ 0.46
TP, TPD, TPED 125-160/4	7.5	100-200 / 211		-	
TP, TPD, TPE, TPED 125-190/4	11	100-250 / 240	-		≥ 0.70
TP, TPD, TPE, TPED 125-230/4	15	100-250 / 269		-	
TP, TPD, TPE, TPED 125-300/4	18.5	100-315 / 295	-		
TP, TPD, TPE 125-340/4	22	100-315 / 312	-		≥ 0.70
TP, TPD, TPE 125-400/4	[illegible]	100-315 / 334		-	

TP Series 300, 4-pole	P2 [kW]	Nominal impeller size / actual impeller size	Trimmed impeller	Maximum impeller	MEI
TP, TPE 150-70/4	5.5	125-200 / 172-150	•		
TP, TPE 150-110/4	7.5	125-200 / 196-178	•		≥ 0.70
TP, TPE 150-155/4	11	125-200 / 218	•		
TP, TPE 150-170/4	15	125-200 / 226		•	
TP, TPD, TPE, TPED 150-130/4	7.5	125-250 / 198	•		
TP, TPD, TPE, TPED 150-160/4	11	125-250 / 220	•		
TP, TPD, TPE, TPED 150-200/4	15	125-250 / 243	•		≥ 0.65
TP, TPD, TPE, TPED 150-220/4	18.5	125-250 / 256	•		
TP, TPD, TPE 150-250/4	22	125-250 / 266		•	
TP, TPE 150-260/4	18.5	125-315 / 275	•		
TP, TPE 150-280/4	22	125-315 / 290	•		≥ 0.70
TP, TPE 150-340/4	30	125-315 / 315	•		
TP, TPE 150-390/4	37	125-315 / 333		•	
TP, TPE 150-450/4	45	125-400 / 358	•		
TP, TPE 150-520/4	55	125-400 / 382	•		≥ 0.70
TP 150-660/4	75	125-400 / 432		•	
TP 200-50/4	4	150-200 / 192-121	•		
TP 200-70/4	5.5	150-200 / 200-130	•		
TP 200-90/4	7.5	150-200 / 210-156	•		≥ 0.70
TP 200-130/4	11	150-200 / 218-210	•		
TP 200-150/4	15	150-200 / 224		•	
TP 200-160/4	15	150-250 / 226-220	•		
TP 200-190/4	18.5	150-250 / 236	•		
TP, TPE 200-200/4	22	150-250 / 248	•		≥ 0.70
TP, TPE 200-240/4	30	150-250 / 272	•		
TP, TPE 200-290/4	37	150-250 / 285		•	
TP, TPE 200-270/4	40	150-315 / 293	•		
TP, TPE 200-320/4	55	150-315 / 311	•		≥ 0.70
TP 200-410/4	75	150-315 / 338		•	
TP, TPE 200-330/4	37	150-400 / 310	•		
TP, TPE 200-360/4	40	150-400 / 326	•		
TP, TPE 200-400/4	55	150-400 / 343	•		
TP 200-470/4	75	150-400 / 373	•		≥ 0.70
TP 200-530/4	90	150-400 / 391	•		
TP 200-590/4	110	150-400 / 412	•		
TP 200-660/4	132	150-400 / 432		•	
TP, TPE 300-190/4	30	250-315 / 251	•		
TP, TPE 300-220/4	37	250-315 / 272	•		≥ 0.70
TP, TPE 300-250/4	40	250-315 / 286		•	
TP, TPE 300-290/4	55	250-350 / 308	•		
TP 300-390/4	75	250-350 / 351	•		≥ 0.70
TP 300-420/4	90	250-350 / 370		•	
TP 300-430/4	110	250-400 / 358	•		
TP 300-500/4	132	250-400 / 382	•		≥ 0.70
TP 300-550/4	160	250-400 / 402		•	
TP 350-280/4	75	300-350 / 308	•		
TP 350-320/4	90	300-350 / 324	•		
TP 350-360/4	110	300-350 / 343	•		≥ 0.70
TP 350-420/4	132	300-350 / 359	•		
TP 350-480/4	160	300-350 / 372		•	
TP 350-530/4	200	300-400 / 394	•		
TP 350-650/4	250	300-400 / 433	•		≥ 0.70
TP 350-780/4	315	300-400 / 460		•	

TP, TPD, 6-pole, PN 16

TP Series 300, 6-pole	P2 [kW]	Nominal impeller size / actual impeller size	Trimmed impeller	Maximum impeller	MEI
TP, TPD 125-60/6	1.5	100-200 / 15[illegible]	-		≥ 0.62
TP, TPD 125-70/6	[illegible]	100-200 / 216		-	
TP, TPD 125-80/6	-	100-250 / 236	-		≥ 0.70
TP, TPD 125-100/6	-	100-250 / 267		-	
TP, TPD 125-130/6	[illegible]	100-315 / 295	-		≥ 0.70
TP, TPD 125-160/6	7.5	100-315 / 326		-	
TP, TPD 150-60/6	[illegible]	125-250 / 204	-		
TP, TPD 150-70/6	-	125-250 / 220	-		≥ 0.62
TP, TPD 150-90/6	-	125-250 / 238	-		
TP, TPD 150-110/6	- -	125-250 / 26[illegible]		-	

TP, PN 25

PN 25	P2 [kW]	Nominal impeller size / actual impeller size	Trimmed impeller	Maximum impeller	MEI
TP Series 300, PN 25	[illegible]				**

** Not in MEI classification because PN 25 is not a part of the MEI classification.

28. Accessories

Unions and valves, TP Series 100

A union kit consists of two cast-iron union tails, two cast-iron union nuts and two EPDM gaskets.

Pump type, union connection	Pressure stage	Size	Product number
TP, TPE 25	PN 10	Rp 3/4	529921
		Rp 1	529922
		Rp 1 1/4	529924
TP, TPE 32	PN 10	Rp 1	509921
		Rp 1 1/4	509922

A valve kit consists of two brass valves, two brass union nuts and two EPDM gaskets.

The valve housing is made of pressure die-cast brass.

Pump type, valve connection	Pressure stage	Size	Product number
TP, TPE 25	PN 10	Rp 3/4	519805
		Rp 1	519806
		Rp 1 1/4	519807
TP, TPE 32	PN 10	Rp 1 1/4	505539

A union kit consists of two bronze union tails, two brass union nuts and two EPDM gaskets.

The valve housing is made of pressure die-cast brass.

Pump type, union connection	Pressure stage	Size	Product number
TP, TPE 25	PN 10	Rp 3/4	529971
		Rp 1	529972
TP, TPE 32	PN 10	Rp 1 1/4	509971

Counterflanges

A flange kit consists of two steel flanges, two gaskets of asbestos-free material IT 200, and the requisite number of bolts.

Counterflange	Pump type	Description	Rated pressure	Pipe connection	Product number
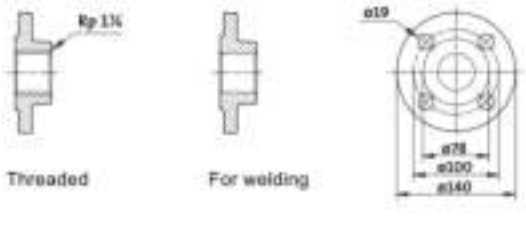 Threaded For welding	TP, TPE 32 TPD, TPED 32	Threaded	10 bar, EN 1092-2	Rp 1 1/4	539703
		For welding	10 bar, EN 1092-2	32 mm, nominal	539704
		Threaded	16 bar, EN 1092-2	Rp 1 1/4	539703
		For welding	16 bar, EN 1092-2	32 mm, nominal	539704
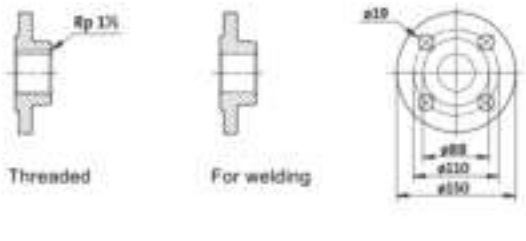 Threaded For welding	TP, TPE 40 TPD, TPED 40	Threaded	10 bar, EN 1092-2	Rp 1 1/2	539701
		For welding	10 bar, EN 1092-2	40 mm, nominal	539702
		Threaded	16 bar, EN 1092-2	Rp 1 1/2	539701
		For welding	16 bar, EN 1092-2	40 mm, nominal	539702
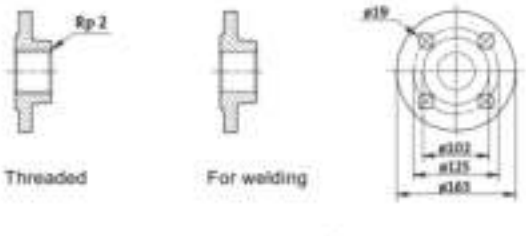 Threaded For welding	TP, TPE 50 TPD, TPED 50	Threaded	10 bar, EN 1092-2	Rp 2	549801
		For welding	10 bar, EN 1092-2	50 mm, nominal	549802
		Threaded	16 bar, EN 1092-2	Rp 2	549801
		For welding	16 bar, EN 1092-2	50 mm, nominal	549802
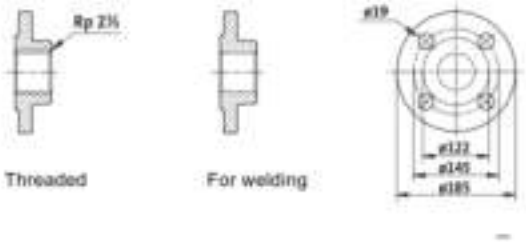 Threaded For welding	TP, TPE 65 TPD, TPED 65	Threaded	10 bar, EN 1092-2	Rp 2 1/2	559801
		For welding	10 bar, EN 1092-2	65 mm, nominal	559802
		Threaded	16 bar, EN 1092-2	Rp 2 1/2	559801
		For welding	16 bar, EN 1092-2	65 mm, nominal	559802
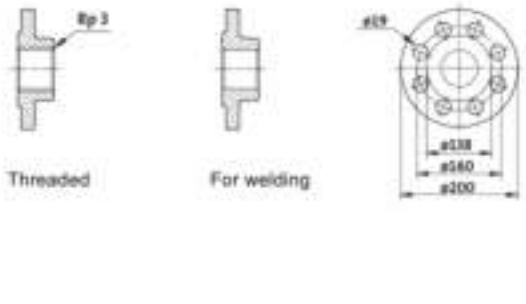 Threaded For welding	TP, TPE 80 TPD, TPED 80	Threaded	6 bar, EN 1092-2	Rp 3	569902
		For welding	6 bar, EN 1092-2	80 mm, nominal	569901
		Threaded	10 bar, EN 1092-2	Rp 3	569902
		For welding	10 bar, EN 1092-2	80 mm, nominal	569901
		Threaded	16 bar, EN 1092-2	Rp 3	569902
		For welding	16 bar, EN 1092-2	80 mm, nominal	569901

Counterflange

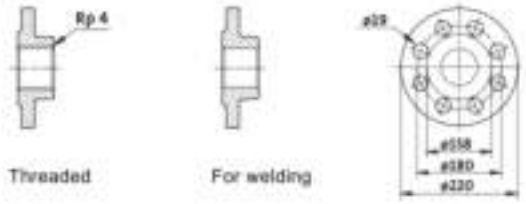

M03 0483 5204

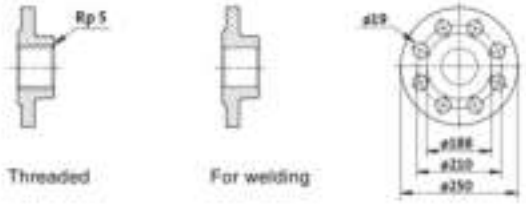

M03 0484 5204

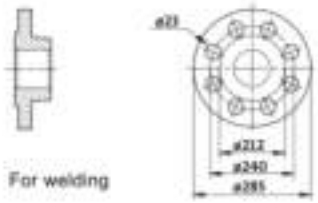

M03 0485 5204

Pump type	Description	Rated pressure	Pipe connection	Product number
TP, TPE 100 TPD, TPED 100	Threaded	6 bar, EN 1092-2	Rp 4	579901
	For welding	6 bar, EN 1092-2	100 mm, nominal	579902
	Threaded	10 bar, EN 1092-2	Rp 4	99558423
	For welding	10 bar, EN 1092-2	100 mm, nominal	579802
	Threaded	16 bar, EN 1092-2	Rp 4	99558423
	For welding	16 bar, EN 1092-2	100 mm, nominal	579802
TP, TPE 125 TPD, TPED 125	Threaded	10 bar, EN 1092-2	Rp 5	485367
	For welding	10 bar, EN 1092-2	125 mm, nominal	485368
	Threaded	16 bar, EN 1092-2	Rp 5	485367
	For welding	16 bar, EN 1092-2	125 mm, nominal	485368
TP, TPE 150 TPD, TPED 150	For welding	10 bar, EN 1092-2	150 mm, nominal	S1111600
	For welding	16 bar, EN 1092-2	150 mm, nominal	S1111600

Adapter flanges for various port-to-port lengths

DN	Height (H) [mm]	Diameter, D [mm]		Pitch-circle diameter, D1 [mm]		Adapter flange	Product number	
		PN 6	PN 10/16	PN 6	PN 10/16		PN 6	PN 10/16
	1 x 220	-	-	90	100		98848068	98848069
	1 x 120	-	-	90	100		98387529	98387530
32								
	1 x 60	70	78	-	-		98387527	98387528
	1 x 30	70	78	-	-		98387531	98387588
	1 x 70	-	-	100	110		539921	539721
40	1 x 90	-	-	100	110		98387590	98387591
	1 x 190	-	-	100	110		98387592	98387593
	1 x 160	-	-	110	125		98387594	98387595
50	1 x 60	-	-	110	125		549924	549824
	1 x 40	90	102	-	-		96281077	96608516
	1 x 135	-	-	130	145		98391271	98391272
65								
	1 x 20	110	122	-	-		98391273	98391274
80	1 x 80	-	-	150	160		98391275	98391276
100	1 x 100	-	-	170	180		98391277	98391278

Base plates

Note: TPE2, TPE3 and TP Series 100 pumps are not designed to be supplied with a base plate. Base plates are supplied as standard with TP and TPE pumps with 11 kW motors and above.

Some of the TP Series 300 pumps are provided with mounting feet and cannot be supplied with a base plate. See fig. 173.

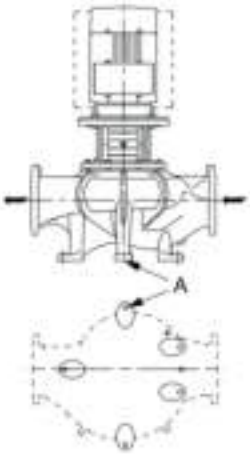

Fig. 173 Principal sketch of a Series 300 pump designed with mounting feet (A)

TPE2 D, TPE3 D

Pump type	Hexagon head screws	Product number
TPE2 D, TPE3 D 32	3 x M12 x 40 mm	99150053
TPE2 D, TPE3 D 40		99150054
TPE2 D, TPE3 D 50		99150055
TPE2 D, TPE3 D 65 TPE2 D, TPE3 D 80		99150056
TPE2 D, TPE3 D 100	3 x M12 x 16 mm	99150057

Drawing. TPE2 D. TPE3 D 32, 40, 50. 65

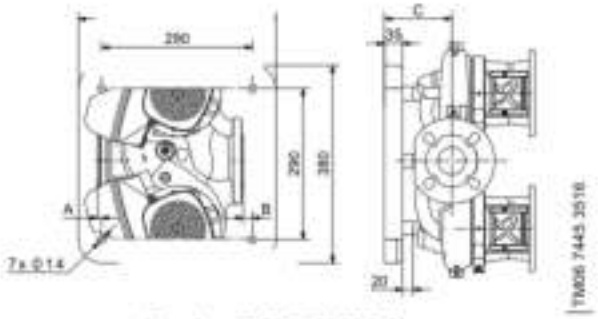

Drawing. TPE2 D, TPE3 D 80

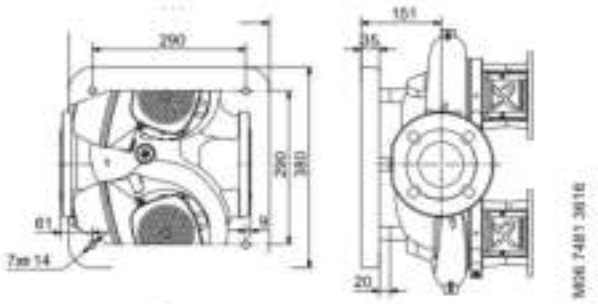

Drawing. TPE2 D. TPE3 D 100

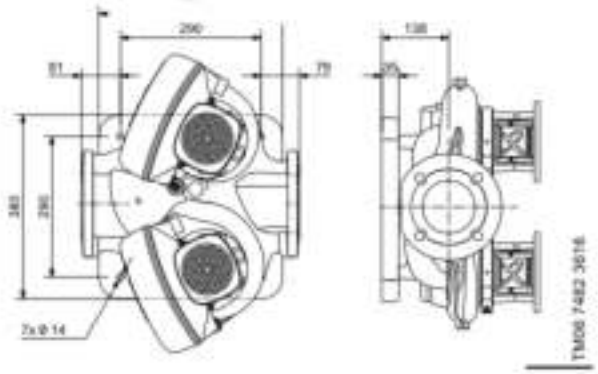

Pump type	Dimensions [mm]			Product number
	A	B	C	
TPE2 D, TPE3 D 32	0	69	123	99150053
TPE2 D, TPE3 D 40	5	45	124	99150054
TPE2 D, TPE3 D 50	8	18	130	99150055
TPE2 D, TPE3 D 65	60	0	132	99150056
TPE2 D, TPE3 D 80				99150056
TPE2 D, TPE3 D 100				99150057

TP, TPE Series 200

Pump type	Hexagon head screws	Product number
TP, TPE 32 TP, TPE 40 TP, TPE 50 TP 65-60/2 TP, TPE 65-120/2 TP 65-180/2	2 x M12 x 20 mm	96591246
TP 65-30/4 TP, TPE 65-60/4 TP, TPE 80 TP, TPE 100	2 x M16 x 30 mm	96591245

Drawing	Product number
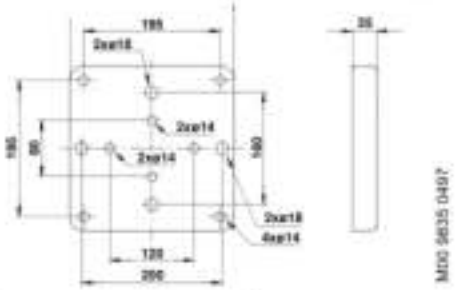	96591246 96591245

TP, TPE Series 300

Pump type	Hexagon head screws	Product number
TP, TPE 32 TP, TPE 40 TP, TPE 50 TP, TPE 65 TP, TPE 80-xx/2 TP, TPE 80-70/4 TP, TPE 80-90/4 TP, TPE 80-110/4 TP, TPE 80-150/4 TP, TPE 80-170/4 TP, TPE 100-160/2 TP, TPE 100-200/2 TP, TPE 100-240/2	2 x M16 x 30 mm	00485031

Drawing	Product number
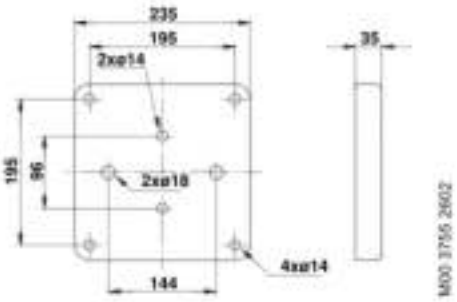	00485031

TP, TPE Series 300

Pump type	Hexagon head screws	Product number
TP, TPE 80-240/4 TP, TPE 80-270/4 TP, TPE 80-340/4 TP, TPE 100-250/2 TP, TPE 100-310/2 TP, TPE 100-360/2 TP, TPE 100-390/2 TP, TPE 100-480/2 TP 100-530/2 TP 100-650/2 TP 100-800/2 TP 100-950/2 TP 100-1040/2 TP 100-1200/2 TP 100-1410/2 TP, TPE 100-xx/4 TP, TPE 125-xx/4 TP, TPE 150-xx/4 TP 125-xx/6 TP 150-xx/6	2 x M16 x 30 mm	96536246

Drawing	Product number
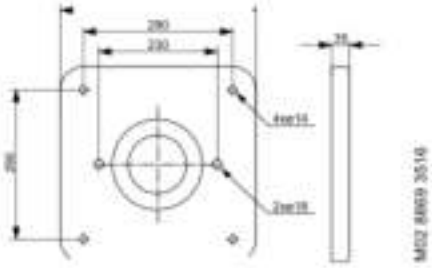	96536246

TPD, TPED Series 300

Pump type	Hexagon head screws	Product number
TPD, TPED 32 TPD, TPED 40 TPD, TPED 50 TPD, TPED 65 TPD, TPED 80-xx/2 TPD, TPED 80-70/4 TPD, TPED 80-90/4 TPD, TPED 80-110/4 TPD, TPED 80-150/4 TPD, TPED 80-170/4 TPD, TPED 100-160/2 TPD, TPED 100-200/2 TPD, TPED 100-240/2	4 x M16 x 30 mm	96489381

Drawing	Product number
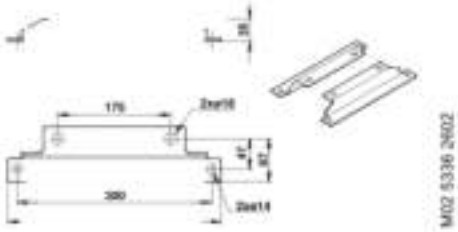	96489381

TPD, TPED Series 300

Pump type	Hexagon head screws	Product number
TPD, TPED 100-250/2 TPD, TPED 100-310/2 TPD, TPED 100-360/2 TPD, TPED 100-390/2 TPD, TPED 100-65/4 TPD, TPED 100-70/4 TPD, TPED 100-90/4 TPD, TPED 100-110/4 TPD, TPED 100-130/4 TPD, TPED 100-170/4	4 x M16 x 30 mm	96536247

Drawing	Product number
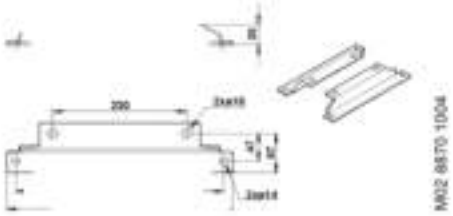	96536247

TPD, TPED Series 300

Pump type	Hexagon head screws	Product number
TPD, TPED 80-240/4 TPD, TPED 80-270/4 TPD, TPED 80-340/4 TPD, TPED 100-200/4 TPD, TPED 100-250/4 TPD, TPED 100-330/4 TPD, TPED 100-370/4 TPD, TPED 100-410/4 TPD, TPED 125-xx/4 TPD, TPED 150-xx/4 TPD 125-xx/6 TPD 150-xx/6	4 x M16 x 30 mm	96536248

Drawing	Product number
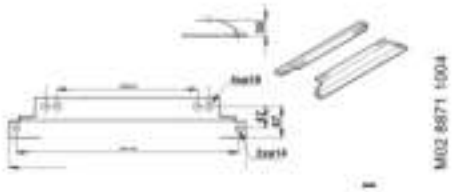	96536248

Blanking flanges

A blanking flange is used to blank off the opening when one of the pumps of a twin-head pump is removed for service to enable uninterrupted operation of the other pump.

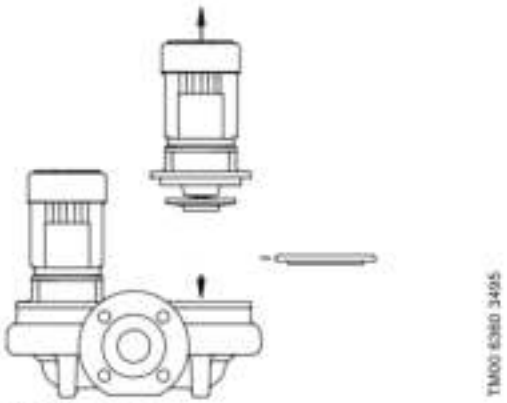

Fig. 174 Blanking flange

TPE2 D, TPE3 D

Pump type	Product number
All TPE2 D, TPE3 D pumps	98159372

TPD, TPED, 2-pole

Pump type	96591261	00565055	96495694	96495695	96495696	96525962	96525963	96525964
TPD, TPED 32-60/2	-							
TPD, TPED 32-120/2	-							
TPD, TPED 32-150/2		-					-	
TPD, TPED 32-180/2		-						
TPD, TPED 32-230/2		-					-	
TPD, TPED 32-200/2			-					
TPD, TPED 32-250/2			-					
TPD, TPED 32-320/2			-					
TPD, TPED 32-380/2			-					
TPD, TPED 32-460/2				-				
TPD, TPED 32-580/2				-				
TPD, TPED 40-60/2	-							
TPD, TPED 40-120/2	-							
TPD, TPED 40-190/2		-						
TPD, TPED 40-230/2		-						
TPD, TPED 40-270/2		-						
TPD, TPED 40-240/2			-					
TPD, TPED 40-300/2			-					
TPD, TPED 40-360/2			-					
TPD, TPED 40-430/2				-				
TPD, TPED 40-530/2				-				
TPD, TPED 40-630/2				-				
TPD, TPED 50-60/2	-							
TPD, TPED 50-120/2		-						
TPD, TPED 50-180/2		-						
TPD, TPED 50-160/2			-					
TPD, TPED 50-190/2			-					
TPD, TPED 50-240/2			-				-	
TPD, TPED 50-290/2			-					
TPD, TPED 50-360/2			-					
TPD, TPED 50-430/2			-					
TPD, TPED 50-420/2					-			
TPD, TPED 50-540/2					-			
TPD, TPED 50-630/2					-			
TPD, TPED 50-710/2					-			
TPD, TPED 50-830/2					-			
TPD, TPED 50-900/2					-			

Pump type	96591261	00565055	96495694	96495695	96495696	96525962	96525963	96525964
TPD, TPED 65-60/2	-							
TPD, TPED 65-120/2		-						
TPD, TPED 65-180/2		-						
TPD, TPED 65-170/2			-				-	
TPD, TPED 65-210/2			-				-	
TPD, TPED 65-250/2			-					
TPD, TPED 65-340/2			-					
TPD, TPED 65-410/2			-					
TPD, TPED 65-340/2			-					
TPD, TPED 65-410/2			-					
TPD, TPED 65-460/2					-		-	
TPD, TPED 65-550/2					-	-		
TPD, TPED 65-660/2					-			
TPD, TPED 65-720/2					-			
TPD 65-930/2					-			
TPD, TPED 80-120/2		-						
TPD, TPED 80-140/2			-		-			
TPD, TPED 80-180/2			-				-	
TPD, TPED 80-210/2			-					
TPD, TPED 80-240/2			-					
TPD, TPED 80-250/2			-					
TPD, TPED 80-330/2			-					
TPD, TPED 80-400/2			-					
TPD, TPED 80-520/2				-				
TPD, TPED 80-570/2				-				
TPD 80-700/2				-				
TPD, TPED 100-120/2		-					-	
TPD, TPED 100-160/2		-	-				-	
TPD, TPED 100-200/2			-					
TPD, TPED 100-240/2			-		-			
TPD, TPED 100-250/2			-					
TPD, TPED 100-310/2			-					
TPD, TPED 100-360/2			-					
TPD, TPED 100-390/2			-		-			
TPD 100-480/2						-		

TPD, TPED, 4-pole

Pump type	96591261	00565055	96495694	96495695	96495696	96525962	96525963	96525964
TPD, TPED 32-30/4	-							
TPD, TPED 32-40/4	-							
TPD, TPED 32-60/4		-						
TPD, TPED 32-80/4			-				-	
TPD, TPED 32-100/4			-			-	-	
TPD, TPED 32-120/4				-			-	
TPD, TPED 40-30/4	-							
TPD, TPED 40-90/4		•						
TPD, TPED 40-100/4		-	-					
TPD, TPED 40-110/4				-				
TPD, TPED 40-140/4				-				
TPD, TPED 50-30/4	-							
TPD, TPED 50-60/4		-						
TPD, TPED 50-90/4			-				-	
TPD, TPED 50-80/4					-			
TPD, TPED 50-120/4					-			
TPD, TPED 50-140/4					-			
TPD, TPED 50-190/4					-			
TPD, TPED 50-230/4					-		-	
TPD, TPED 65-30/4		•						
TPD, TPED 65-60/4		-						
TPD, TPED 65-90/4			-					
TPD, TPED 65-110/4					-			
TPD, TPED 65-130/4					-			
TPD, TPED 65-150/4					-			
TPD, TPED 65-170/4				-	-			
TPD, TPED 65-240/4					-			
TPD, TPED 80-30/4		-						
TPD, TPED 80-60/4		-				-		
TPD, TPED 80-70/4			-					
TPD, TPED 80-90/4			-					
TPD, TPED 80-110/4			-				-	
TPD, TPED 80-150/4				-			-	
TPD, TPED 80-170/4				•				
TPD, TPED 80-240/4				-			-	-
TPD, TPED 80-270/4								-
TPD, TPED 80-340/4								-
TPD, TPED 100-30/4		-						
TPD, TPED 100-65/4			-					
TPD, TPED 100-70/4			-					
TPD, TPED 100-90/4			-					
TPD, TPED 100-110/4			-					
TPD, TPED 100-130/4						-		
TPD, TPED 100-170/4						-		
TPD, TPED 100-200/4								-
TPD, TPED 100-250/4								-
TPD, TPED 100-330/4								•
TPD, TPED 100-370/4								•
TPD, 100-410/4				-				•
TPD, TPED 125-110/4						-		
TPD, TPED 125-130/4						-		
TPD, TPED 125-160/4						-		
TPD, TPED 125-190/4								-
TPD, TPED 125-230/4								-
TPD, TPED 125-300/4								-
TPD, 125-340/4								•
TPD 125-400/4								•
TPD, TPED 150-130/4							-	
TPD, TPED 150-160/4							-	
TPD, TPED 150-200/4							-	
TPD, TPED 150-220/4							-	
TPD 150-250/4							-	

TPD, 6-pole

Pump type	96591261	00565055	96495694	96495695	96495696	96525962	96525963	96525964
TPD 125-60/6	-					-		
TPD 125-70/6						-		
TPD 125-80/6								-
TPD 125-100/6								-
TPD 125-130/6								-
TPD 125-160/6								-
TPD 150-60/6							-	
TPD 150-70/6							-	
TPD 150-90/6							-	
TPD 150-110/6							-	

Insulating kits

Insulating kits are available for TPE2 and TPE3 pumps.

The insulating kit consists of two shells.

The insulating kit is tailored to the individual pump model and encloses the entire pump housing, thus providing optimum insulation.

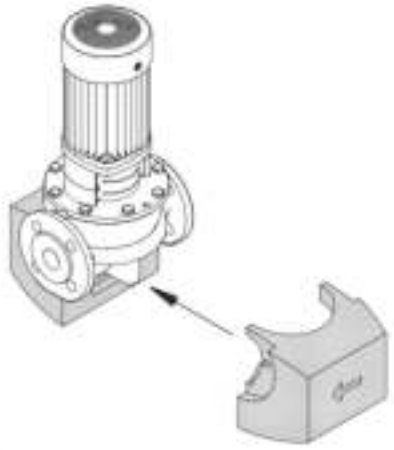

Fig. 175 Insulating kit

Kits for TPE2, TPE3 pumps

Pump type	Product number
TPE2, TPE3 32-80/120/150/180/200	98159366
TPE2, TPE3 40-80/120/150/180/200/240	98159368
TPE2, TPE3 50-60/80/120/150/180/200/240	98159367
TPE2, TPE3 65-60/80/120/150/180/200	98159361
TPE2, TPE3 80-40/120/150/180	98159363
TPE2, TPE3 100-40/120/150/180	98159362

Sensors

Flow sensors

- Sensor tube with sensor sensor tube of 1.4408 and sensor of 1.4404
- 4-20 mA output signal
- 2 flanges
- 5 m cable with M12 connection in one end

quick guide.

Grundfos Vortex flow sensor, VFI[1]	Type	Flow range [m³/h]	Pipe connection	O-ring		Connection type		Product number
				EPDM	FKM	Cast-iron flange	Stainless-steel flange	
	VFI 1.3-25 DN32 020 E	1.3 - 25	DN 32	•		•		97686141
	VFI 1.3-25 DN32 020 F				•	•		97686142
	VFI 1.3-25 DN32 020 E			•			•	97688297
	VFI 1.3-25 DN32 020 F				•		•	97688298
	VFI 2-40 DN40 020 E	2-40	DN 40	•		•		97686143
	VFI 2-40 DN40 020 F				•	•		97686144
	VFI 2-40 DN40 020 E			•			•	97688299
	VFI 2-40 DN40 020 F				•		•	97688300
	VFI 3.2-64 DN50 020 E	2-64	DN 50	•		•		97686145
	VFI 3.2-64 DN50 020 F				•	•		97686146
	VFI 3.2-64 DN50 020 E			•			•	97688301
	VFI 3.2-64 DN50 020 F				•		•	97688302
	VFI 5.2-104 DN65 020 E	5.2 - 104	DN 65	•		•		97686147
	VFI 5.2-104 DN65 020 F				•	•		97686148
	VFI 5.2-104 DN65 020 E			•			•	97688303
	VFI 5.2-104 DN65 020 F				•		•	97688304
	VFI 8-160 DN80 020 E	8-160	DN 80	•		•		97686149
	VFI 8-160 DN80 020 F				•	•		97686150
	VFI 8-160 DN80 020 E			•			•	97688305
	VFI 8-160 DN80 020 F				•		•	97688306
	VFI 12-240 DN100 020 E	12-240	DN 100	•		•		97686151
	VFI 12-240 DN100 020 F				•	•		97686152
	VFI 12-240 DN100 020 E			•			•	97688308
	VFI 12-240 DN100 020 F				•		•	97688309

[1] For more information about the VFI sensor, see the data booklet "Grundfos direct sensors" 7790189.

Temperature sensors

Temperature sensor, TTA

Temperature sensor with Pt100 temperature sensor fitted in a ∅6 x 100 mm measuring tube made of stainless steel, DIN 1.4571 and a 4-20 mA sensor built into a type B head DIN 43.729.

The connecting head is made of painted pressure die-cast aluminium with Pg 16 screwed connection, stainless screws and neoprene rubber gasket.

The sensor is built into the system either by means of a cutting ring bush or by means of one of the two matching protecting tubes ∅9 x 100 mm or ∅9 x 50 mm, respectively.

The protecting tube has a G 1/2 connection.

Cutting ring bush or protecting tube must be ordered separately.

Technical data

Type		TTA (-25) 25	TTA (0) 25	TTA (0) 150	TTA (50) 100
Product number		96430194	96432591	96430195	96432592
Measuring range		-25 to +25 °C	0 to +25 °C	0 to +150 °C	50 to +100 °C
Measuring accuracy		According to IEC 751, class B, 0.3 °C at 0 °C			
Response time, τ (0.9) in water 0.2 m/s	Without protecting tube.	28 seconds			
	With oil-filled protecting tube.	75 seconds			
Enclosure class		IP55			
Output signal		4-20 mA			
Supply voltage		8-35 VDC			
EMC, electromagnetic compatibility	Emission:	According to EN 50081-1			
	Immunity:	According to EN 50082-2			

Accessories

Type	Protecting tube ∅9 x 50 mm	Protecting tube ∅9 x 100 mm	Cutting ring bush
Product number	96430201	96430202	96430203
Description	Protecting tube of stainless steel SINOX SSH 2 for ∅6 mm measuring tube. Pipe connection G 1/2.		Cutting ring bush for ∅6 mm measuring tube. Pipe connection G 1/2.

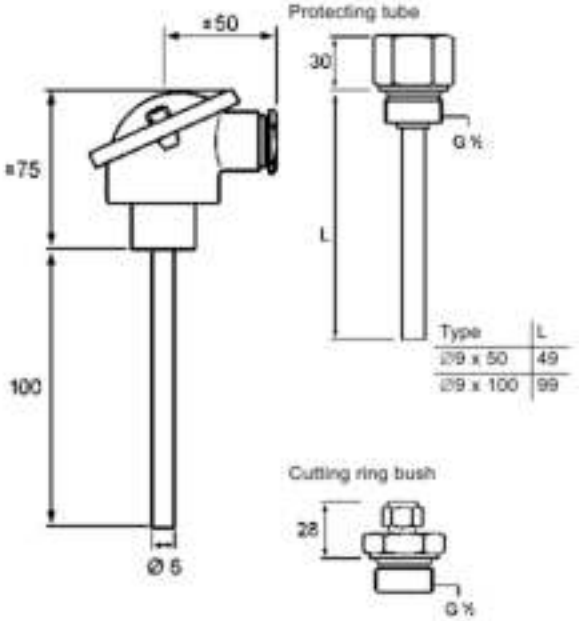

Type	L
∅9 x 50	49
∅9 x 100	99

Fig. 176 Dimensional sketch

Differential-temperature sensor, HONSBERG

The temperature sensors T1 and T2 measure the temperature in their respective location at the same time. Besides the temperature measurement, the T1 features an electronic unit calculating the temperature difference between T1 and T2 and transmitting the result as a 4-20 mA signal via a current amplifier.

As the measured signal transmitted from the T2 is also a current signal, a relatively large distance is allowed between T2 and T1.

As appears from fig. 177, it has no effect on the output signal, I_{out}, which of the sensors that measures the highest temperature.

Thus, the current signal generated will always be positive between 4 and 20 mA.

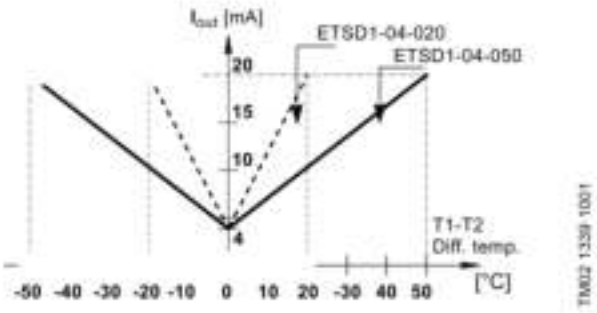

Fig. 177 Sensor characteristics

Technical data

Type	ETSD1-04-020K045 + ETSD2-K045	ETSD1-04-050K045 + ETSD2-K045
Product number	96409362	96409363
Measuring range: Temperature difference (T1-T2) or (T2-T1)	0 to +20 °C	0 to +50 °C
Supply voltage	15-30 VDC	
Output signal	4-20 mA	
Measuring accuracy	± 0.3 % FS	
Repeatability	± 1 % FS	
Response time, τ (0.9)	2 minutes	
Ambient temperature	-25 to +85 °C	
Operating temperature of T1 and T2	-25 to +105 °C	
Maximum distance between T1 and T2	300	
ıction	Between T1 and T2: M12 x 1 plug, output signal with DIN 43650-A plug type	
Storage temperature	-45 to +125 °C	
Short-circuit-proof	Yes	
Protected against polarity reversal	Yes, up to 40 V	
Materials in contact with liquid	Stainless steel, DIN 1.4571	
Enclosure class	IP65	
EMC, electromagnetic compatibility	Emission: According to EN 50081 Immunity: According to EN 50082	

ETSD1-	04-	020	K	045	Specification
ETSD1-					Reference temperature, T1.
	04-				0 °C corresponds to 4 mA.
		020			20 °C corresponds to 20 mA.
		050			50 °C corresponds to 20 mA.
			K		Material in contact with liquid: Stainless steel, DIN 1.4571.
				045	Length of sensing element: 45 mm.

ETSD2-	K	045	Specification
ETSD2-			Reference temperature, T2.
	K		Material in contact with liquid: Stainless steel, DIN 1.4571.
		045	Length of sensing element: 45 mm.

Installing the sensor

Fit the two sensors in such a way that the sensing elements are located in the middle of the flow of the liquid to be measured.

For tightening, use only the hexagon nut.

You can turn the upper part of the sensors to any position suitable for the connection of cables.

The sensors have a G 1/2 thread. See fig. 178.

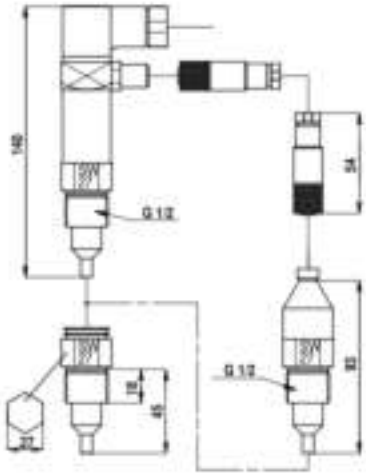

Fig. 178 Dimensional sketch

Ambient temperature sensor

Sensor type	Type	Supplier	Measuring range	Product number
Ter	WR 52	Img DK: Plesner	-50 to +50 °C	ID8295

Pressure sensors

Sensors for boosting applications

Danfoss pressure sensor kit	Pressure range [bar]	Product number
• Connection: G 1/2 A, DIN 16288 - B6kt • Electrical connection: plug DIN 43650	0 - 2.5	96478188
	0-4	91072075
	0-6	91072076
	0-10	91072077
	0-16	91072078
• Pressure sensor, type MBS 3000, wi Connection: G 1/4 A, DIN 16288 - B6kt • 5 cable clips, black • Fitting instructions PT, 00400212	0 - 2.5	405159
	0-4	405160
	0-6	405161
	0-10	405162
	0-16	405163

Sensors for circulation applications

Grundfos differential pressure sensor, DPI	Pressure range [bar]	Product number
• 1 sensor including 0.9 m screened cable, 7/16" connections • 1 original DPI bracket for wall mounting • 1 Grundfos bracket for mounting on motor • 2 M4 screws for mounting of sensor on bracket • 1 M6 screw, self-cutting, for mounting on MGE 90/100 • 1 M8 screw, self-cutting, for mounting on MGE 112/132 • 1 M10 screw, self-cutting, for mounting on MGE 160 • 1 M12 screw, self-cutting, for mounting on MGE 180 • 3 capillary tubes, short/long • 2 fittings, 1/4" - 7/16" • 5 cable clips, black • Installation and operating instructions • Service kit instruction	0 - 0.6	96611522
	0-1	96611523
	0 - 1.6	96611524
	0 - 2.5	96611525
	0-4	96611526
	0-6	96611527
	0-10	96611550
Fitting kit for TPED with two sensors		96491010

Select the differential pressur aximum pressure of the sensor is higher than the m ssure of the pump.

Second sensor for TPED pump

Order a second differential pressure sensor kit for TPED pumps when two sensors are needed.
The kits are set as optional part for TPED Series 2000 pumps up to 11 kW 2-pole and 7.5 kW 4-pole.

Differential pressure sensor kit	Pressure range [bar]	Product number
• 1 differential pressure sensor • Capillary tubes • Screws and tee-p isting sensor and the new sensor	0-4	99725401
	0-6	99725451
	0-10	99725455

External Grundfos sensors

Sensor	Type	Supplier	Measuring range [bar]	Transmitter output [mA]	Power supply [VDC]	Process connection	Product number
Pressure transmitter	RPI	Grundfos	0 - 0.6	4-20	12-30	G 1/2	97748907
			0-1				97748908
			0 - 1.6				97748909
			0 - 2.5				97748910
			0-4				97748921
			0-6				97748922
			0-12				97748923
			0-16				97748924

Sensor interface

Sensor interface, SI 001 PSU[1]	Description	Product number
	Grundfos Direct Sensors™, type SI 001 PSU, is an external power supply for the VFI, DPI and other transmitters with 24 VDC supply voltage. The power supply is used when the cable between transmitter and controller is more than 30 m long.	96915820

[1] For fi t the PSU sensor interface, see the installation and operating instructions "SI 001 PSU - sensor interface", publication number 96944355, or quick guide, publication number 96944356.

Potentiometer

TM02 1630 5102

Fig. 179 Potentiometer

Potentiometer for setpoint setting and start/stop of the pump.

Product	Product number
External potentiometer with cabinet for wall mounting	625468

Grundfos GO

Grundfos GO is used for wireless infrared or radio communication with the pumps.

MI 301

MI 301 is a module with built-in infrared and radio communication. Use MI 301 in conjunction with Android or iOS-based smart devices with a Bluetooth connection. MI 301 has rechargeable Li-ion battery and you must charge it separately.

TM05 3890 1712

Fig. 180 MI 301

Supplied with the product:

- Grundfos MI 301
- sleeve
- battery charger
- quick guide.

Product numbers

Grundfos GO variant	Product number
Grundfos MI 301	98046408

CIU communication interface units

GrA 6118

Fig. 181 Grundfos CIU communication interface unit

The CIU units enable communication of operating data, such as measured values and setpoints, between TPE pumps and a building management system. The CIU unit incorporates a 24-240 VAC/VDC power supply module and a CIM module. You can mount the CIU unit on a DIN rail or on a wall. For further information See *15. Communication* on page 124.

We offer the following CIU units:

Description	Fieldbus protocol	Product number
CIU 100	LONWorks for pumps	96753735
CIU 150	PROFIBUS DP	96753081
CIU 200	Modbus RTU	96753082
CIU 250[1]	GSM	96787106
CIU 270[1]	GRM	96898819
CIU 300	BACnet MS/TP	96893769
CIU 500	Ethernet, BACnet IP	
CIU 500	Ethernet, Modbus TCP	
CIU 500	Ethernet, PROFINET IO	96753894
CIU 500	Ethernet, GRM IP	
CIU 500	Ethernet, EtherNet/IP	
CIU 900	CIU box without CIM	99448387
CIU 901	CIU box with IO 270 only	99448389

[1] Antenna not included. See *Antennas and battery*.

For further information about data communication via CIU units and fieldbus protocols, see the CIU documentation available in Grundfos Product Center. See page 282.

CIM communication interface modules

GrA6121

Fig. 182 Grundfos CIM communication interface module

The CIM modules enable communication of operating data, such as measured values and setpoints, between TPE pumps and a building management system. The CIM modules are add-on communication modules which are fitted in the terminal box of TPE pumps. For further information see *15. Communication* on page 124.

Note: CIM modules must be fitted by authorised personnel.

We offer the following CIM modules:

Description	Fieldbus protocol	Product number
CIM 100	LONWorks for pumps	96824797
CIM 110	LONWorks for multipump	96824798
CIM 150	PROFIBUS DP	96824793
CIM 200	Modbus RTU	96824796
CIM 250[1]	GSM	96824795
CIM 260-EU[1]	3G/4G cellular	99439302
CIM 260-US[1]	3G/4G cellular	99439306
CIM 270[1]	GRM	96898815
CIM 280-EU[1]	GIC/GRM 3G/4G	99439724
CIM 280-US[1]	GIC/GRM 3G/4G	99439725
CIM 300	BACnet MS/TP	96893770
CIM 500	Ethernet, BACnet IP	
CIM 500	Ethernet, Modbus TCP	
CIM 500	Ethernet, PROFINET IO	98301408
CIM 500	Ethernet, GRM IP	
CIM 500	Ethernet, EtherNet/IP	

[1] Antenna not included. See *Antennas and battery*.

For further information about data communication via CIM modules and fieldbus protocols, see the CIM documentation available in Grundfos Product Center. See page 282.

Antennas and battery

Description	Product number
Antenna for roof for CIM/CIU 250/270	97631956
Antenna for desk for CIM/CIU 250/270	97631957
Antenna (rod) 3G/4G for CIM 260/280	99043061
Antenna (puc) 3G/4G for CIM 260/280	99518079
CIM 250 battery	99499908

EMC filter

EMC, electromagnetic compatibility to EN 61800-3

Motor [kW]		Emission/immunity
2-pole	4-pole	
0.37	0.37	Emission: Motors may be installed in residential areas (first environment), unrestricted distribution, corresponding to CISPR11, group 1, class B. Immunity: Motors fulfil the requirements for both the first and second environment.
0.55	0.55	
0.75	0.75	
1.1	1.1	
1.5	1.5	
2.2	2.2	
3.0	3.0	
4.0	4.0	
5.5		
-	5.5	Emission: The motors are category C3, corresponding to CISPR11, group 2, class A, and may be installed in industrial areas (second environment). If fitted with an external Grundfos EMC filter, the motors are category C2, corresponding to CISPR11, group 1, class A, and may be installed in residential areas (first environment).
7.5	7.5	
11	11	
15	15	
18.5	18.5	
22	-	

TM02 9198 1203

Fig. 183 EMC filter

The EMC filter for residential areas is available as a complete kit ready for installation.

Product	Product number
EMC filter, TPE 5.5 kW, 4-pole and 7.5 kW	96041047
EMC filter, TPE 11-22 kW	96478309

CUE accessories

Add-on module	Type	Product number
Sensor input module	MCB 114	96760901
Multipump module[1]	MCO 101	99753103

[1] Only possible with t control mode.

29. Minimum inlet pressure - NPSH

To ensure optimum and noiseless operation, we recommend that you use the minimum inlet pressure values shown on pages 277 to 280.

A minimum inlet pressure is required to avoid pressure drop that may cause cavitation.

Use the following formula to calculate the minimum inlet pressure, p_s in bar relative. The pressure gauge value on the pump inlet side.

Note: Base the calculation of the minimum inlet pressure on the maximum required flow.

$$p_s \geq \left(NPSH_R \times \rho \times g - \frac{1}{2} \times \rho \times c^2\right) \times 0{,}00001 - p_b + p_d \quad \text{[bar relative]}$$

p_s = Minimum inlet pressure in bar.

$NPSH_R$ = The required Net Positive Suction Head in m head, to be read from the NPSH curve at the highest flow the pump will be delivering.

ρ = Density of the pumped liquid measured in kg/m^3.

g = Gravitational acceleration measured in m/s. For estimated calculations use the value 9.81 m/s^2.

c = Flow velocity of the pumped liquid at the pressure gauge. Insert the flow velocity as the unit [m/s].

See individual curve charts from page 166.

p_b = Barometric pressure in bar.

Set the barometric pressure to 0.97 bar.

Note: Only occasionally the pressure is as high as 1 bar; this value is also at sea level.

p_d = Vapour pressure in bar. See fig. 184.

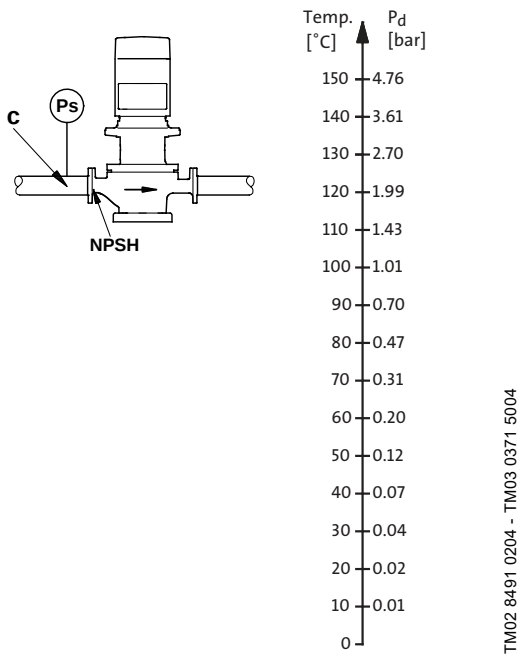

Fig. 184 Minimum inlet pressure

TPE2, TPE2 D, TPE3, TPE3 D

Pump type	p [bar]				
	20 °C	60 °C	90 °C	110 °C	120 °C
TPE2, TPE2 D, TPE3, TPE3 D 32-80	0.[illegible]	0.[illegible]	0.[illegible]	0.[illegible]	1.[illegible]
TPE2, TPE2 D, TPE3, TPE3 D 32-120	0.[illegible]	0.[illegible]	0.2	0.[illegible]	1.5
TPE2, TPE2 D, TPE3, TPE3 D 32-150	0.[illegible]	0.[illegible]	0.4	1.[illegible]	1.7
TPE2, TPE2 D, TPE3, TPE3 D 32-180	0.[illegible]	0.2	0.6	1.[illegible]	1.9
TPE2, TPE2 D, TPE3, TPE3 D 32-200	0.[illegible]	0.4	0.9	1.[illegible]	2.2
TPE2, TPE2 D, TPE3, TPE3 D 40-80	0.[illegible]	0.[illegible]	0.2	0.9	1.5
TPE2, TPE2 D, TPE3, TPE3 D 40-120	0.[illegible]	0.[illegible]	0.2	0.9	1.5
TPE2, TPE2 D, TPE3, TPE3 D 40-150	0.[illegible]	0.[illegible]	0.5	1.[illegible]	1.8
TPE2, TPE2 D, TPE3, TPE3 D 40-180	0.[illegible]	0.[illegible]	0.6	1.[illegible]	1.9
TPE2, TPE2 D, TPE3, TPE3 D 40-200	0.[illegible]	0.2	0.7	1.[illegible]	2.0
TPE2, TPE2 D, TPE3, TPE3 D 40-240	0.[illegible]	0.3	0.8	1.[illegible]	2.1
TPE2, TPE2 D, TPE3, TPE3 D 50-60	0.[illegible]	0.1	0.5	1.[illegible]	1.8
TPE2, TPE2 D, TPE3, TPE3 D 50-80	0.[illegible]	0.3	0.8	1.[illegible]	2.1
TPE2, TPE2 D, TPE3, TPE3 D 50-120	0.4	0.6	1.[illegible]	1.8	2.4
TPE2, TPE2 D, TPE3, TPE3 D 50-150	0.6	0.8	1.[illegible]	2.0	2.6
TPE2, TPE2 D, TPE3, TPE3 D 50-180	0.7	0.9	1.4	2.[illegible]	2.7
TPE2, TPE2 D, TPE3, TPE3 D 50-200	0.9	1.[illegible]	1.6	2.[illegible]	2.9
TPE2, TPE2 D, TPE3, TPE3 D 50-240	0.[illegible]	1.[illegible]	1.6	2.3	2.9
TPE2, TPE2 D, TPE3, TPE3 D 65-60	0.[illegible]	0.[illegible]	0.2	0.[illegible]	1.5
TPE2, TPE2 D, TPE3, TPE3 D 65-80	0.[illegible]	0.[illegible]	0.3	1.[illegible]	1.7
TPE2, TPE2 D, TPE3, TPE3 D 65-120	0.[illegible]	0.2	0.6	1.[illegible]	2.0
TPE2, TPE2 D, TPE3, TPE3 D 65-150	0.[illegible]	0.2	0.7	1.[illegible]	2.1
TPE2, TPE2 D, TPE3, TPE3 D 65-180	0.[illegible]	0.5	1.[illegible]	1.[illegible]	2.4
TPE2, TPE2 D, TPE3, TPE3 D 65-200	0.6	0.8	1.3	1.[illegible]	2.7
TPE2, TPE2 D, TPE3, TPE3 D 80-40	0.[illegible]	0.1	0.3	[illegible]	1.6
TPE2, TPE2 D, TPE3, TPE3 D 80-120	0.[illegible]	0.3	0.9	1.[illegible]	2.1
TPE2, TPE2 D, TPE3, TPE3 D 80-150	0.[illegible]	0.3	0.9	1.[illegible]	2.1
TPE2, TPE2 D, TPE3, TPE3 D 80-180	0.[illegible]	0.5	1.[illegible]	1.7	2.3
TPE2, TPE2 D, TPE3, TPE3 D 100-40	0.[illegible]	0.[illegible]	0.4	1.[illegible]	1.7
TPE2, TPE2 D, TPE3, TPE3 D 100-120	0.[illegible]	0.[illegible]	0.6	1.[illegible]	1.9
TPE2, TPE2 D, TPE3, TPE3 D 100-150	0.[illegible]	0.2	0.7	1.[illegible]	2.0
TPE2, TPE2 D, TPE3, TPE3 D 100-180	0.[illegible]	0.[illegible]	0.[illegible]	1.[illegible]	2.1

TP, TPE, TPD, TPED, 2-pole, PN 6, 10, 16, 25

Pump type	p [bar]						
	20 °C	60 °C	90 °C	110 °C	120 °C	140 °C	150 °C
TP 25-50/2	0.1	0.1	0.2	0.5			-
TP 25-80/2	0.1	0.1	0.1	0.3			-
TP 25-90/2	0.1	0.1	0.2	0.5			-
TP 32-50/2	0.1	0.1	0.1	0.2			-
TP 32-80/2	0.1	0.1	0.2	0.5			-
TP 32-90/2	0.1	0.1	0.2	0.5	-	-	-
TP, TPD 32-60/2	0.1	0.1	0.2	1.0	1.5	3.2	-
TP, TPD 32-120/2	0.1	0.2	0.7	1.5	2.0	3.7	-
TP, TPD 32-150/2	0.1	0.3	0.8	1.6	2.1	3.8	-
TP, TPD 32-180/2	0.5	0.7	1.2	2.0	2.5	4.2	-
TP, TPD 32-230/2	0.7	0.9	1.4	2.2	2.7	4.4	-
TP, TPD 32-200/2	0.1	0.1	0.2	0.9	1.5	3.1	-
TP, TPD 32-250/2	0.1	0.1	0.3	1.0	1.6	3.2	-
TP, TPD 32-320/2	0.1	0.1	0.6	1.3	1.9	3.5	-
TP, TPD 32-380/2	0.1	0.2	0.7	1.4	2.0	3.6	-
TP, TPD 32-460/2	0.1	0.2	0.7	1.4	1.9	3.6	-
TP, TPD 32-580/2	0.2	0.4	0.9	1.6	2.2	3.8	-
TP 40-50/2	0.1	0.1	0.1	0.3			-
TP 40-80/2	0.1	0.1	0.2	0.5			-
TP 40-90/2	0.1	0.1	0.2	0.5	-	-	-
TP, TPD 40-60/2	0.1	0.1	0.5	1.2	1.8	3.5	-
TP, TPD 40-120/2	0.1	0.1	0.4	1.2	1.7	3.4	-
TP 40-180/2	0.1	0.2	0.7	1.5	2.0	3.7	-
TP, TPD 40-190/2	0.1	0.3	0.8	1.6	2.1	3.8	-
TP, TPD 40-230/2	0.7	0.9	1.4	2.2	2.7	4.4	-
TP, TPD 40-270/2	0.7	0.9	1.4	2.2	2.7	4.4	-
TP, TPD 40-240/2	0.1	0.1	0.4	1.1	1.7	3.3	-
TP, TPD 40-300/2	0.1	0.1	0.4	1.1	1.6	3.3	-
TP, TPD 40-360/2	0.2	0.4	0.9	1.6	2.1	3.8	-
TP, TPD 40-430/2	0.1	0.1	0.5	1.2	1.8	3.4	-
TP, TPD 40-530/2	0.1	0.1	0.6	1.3	1.9	3.5	-
TP, TPD 40-630/2	0.1	0.3	0.8	1.5	2.1	3.7	-
TP, TPD 50-60/2	0.1	0.1	0.4	1.1	1.7	3.4	-
TP, TPD 50-120/2	0.1	0.2	0.7	1.5	2.0	3.7	-
TP, TPD 50-180/2	0.1	0.2	0.7	1.4	2.0	3.7	-
TP, TPD 50-160/2	0.1	0.1	0.1	0.8	1.4	3.0	-
TP, TPD 50-190/2	0.1	0.1	0.1	0.8	1.4	3.0	-
TP, TPD 50-240/2	0.1	0.1	0.1	0.8	1.4	3.0	-
TP, TPD 50-290/2	0.1	0.1	0.2	0.9	1.5	3.1	-
TP, TPD 50-360/2	0.1	0.1	0.2	1.0	1.5	3.1	-
TP, TPD 50-430/2	0.1	0.1	0.4	1.1	1.6	3.3	-
TP, TPD 50-420/2	0.1	0.1	0.3	1.1	1.6	3.2	-
TP, TPD 50-540/2	0.1	0.1	0.5	1.3	1.8	3.4	-
TP, TPD 50-630/2	0.1	0.1	0.6	1.4	1.9	3.6	-
TP, TPD 50-710/2	0.6	0.8	1.3	2.0	2.6	4.2	-
TP, TPD 50-830/2	0.5	0.7	1.2	2.0	2.5	4.1	-
TP, TPD 50-900/2	1.0	1.2	1.7	2.4	3.0	4.6	-
TP, TPD 65-60/2	0.1	0.3	0.8	1.5	2.1	3.8	-
TP, TPD 65-120/2	0.5	0.7	1.2	2.0	2.5	4.2	-
TP, TPD 65-180/2	0.3	0.5	1.0	1.8	2.3	4.0	-
TP, TPD 65-170/2	0.1	0.1	0.1	0.9	1.4	3.1	-
TP, TPD 65-210/2	0.1	0.1	0.2	0.9	1.5	3.1	-
TP, TPD 65-250/2	0.1	0.1	0.3	1.0	1.6	3.2	-
TP, TPD 65-340/2	0.1	0.1	0.2	0.9	1.4	3.1	-
TP, TPD 65-410/2	0.1	0.1	0.2	0.9	1.4	3.1	-
TP, TPD 65-460/2	0.1	0.1	0.2	1.0	1.5	3.1	-
TP, TPD 65-550/2	0.1	0.1	0.3	1.0	1.6	3.2	-
TP, TPD 65-660/2	0.1	0.1	0.4	1.1	1.6	3.3	-
TP, TPD 65-720/2	0.1	0.1	0.6	1.3	1.9	3.5	-
TP, TPD 65-930/2	0.6	0.8	1.3	2.0	2.6	4.2	-

Pump type	p [bar]						
	20 °C	60 °C	90 °C	110 °C	120 °C	140 °C	150 °C
TP, TPD 80-120/2	1.2	1.4	1.9	2.7	3.2	4.9	-
TP, TPD 80-140/2	0.1	0.2	0.7	1.4	1.9	3.6	-
TP, TPD 80-180/2	0.1	0.1	0.3	1.1	1.6	3.2	-
TP, TPD 80-210/2	0.1	0.1	0.4	1.1	1.7	3.3	-
TP, TPD 80-240/2	0.1	0.1	0.5	1.3	1.8	3.4	-
TP, TPD 80-250/2	0.1	0.3	0.8	1.6	2.1	3.7	-
TP, TPD 80-330/2	0.1	0.2	0.7	1.4	2.0	3.6	-
TP, TPD 80-400/2	0.2	0.4	0.9	1.6	2.2	3.8	-
TP, TPD 80-520/2	0.1	0.1	0.6	1.4	1.9	3.5	-
TP, TPD 80-570/2	0.1	0.3	0.8	1.6	2.1	3.7	-
TP, TPD 80-700/2	0.6	0.8	1.3	2.1	2.6	4.2	-
TP, TPD 100-120/2	1.9	2.1	2.6	3.4	3.9	5.6	-
TP, TPD 100-160/2	0.1	0.1	0.6	1.3	1.9	3.5	-
TP, TPD 100-200/2	0.1	0.1	0.4	1.2	1.7	3.3	-
TP, TPD 100-240/2	0.1	0.1	0.5	1.3	1.8	3.4	-
TP, TPD 100-250/2	0.6	0.8	1.3	2.0	2.5	4.2	-
TP, TPD 100-310/2	0.6	0.8	1.3	2.0	2.6	4.2	-
TP, TPD 100-360/2	0.6	0.8	1.3	2.0	2.5	4.2	-
TP, TPD 100-390/2	1.0	1.2	1.7	2.4	3.0	4.6	-
TP, TPD 100-480/2	1.5	1.7	2.2	2.9	3.5	5.1	-
TP 100-530/2	1.6	1.8	2.2	3.2	3.7	5.3	6.6
TP 100-650/2	1.4	1.6	2.0	3.0	3.5	5.1	6.4
TP 100-800/2	1.3	1.5	1.9	2.9	3.4	5.0	6.3
TP 100-950/2	1.3	1.5	1.9	2.9	3.4	5.0	6.3
TP 100-1040/2	1.2	1.4	1.8	2.8	3.3	4.9	6.2
TP 100-1200/2	1.2	1.4	1.8	2.8	3.3	4.9	6.2
TP 100-1410/2	1.2	1.4	1.8	2.8	3.3	4.9	6.2
TP 125-310/2	0.4	0.5	1.0	1.7	2.3	3.9	-
TP 125-360/2	0.5	0.6	1.1	1.8	2.4	4.0	-

TP, TPE, TPD, TPED, 4-pole, PN 6, 10, 16, 25

Pump type	p [bar]						
	20 °C	60 °C	90 °C	110 °C	120 °C	140 °C	150 °C
TP, TPD 32-30/4	0.1	0.1	0.1	0.8	1.4	3.1	-
TP, TPD 32-40/4	0.1	0.1	0.1	0.9	1.4	3.1	-
TP, TPD 32-60/4	0.1	0.1	0.3	1.1	1.6	3.3	-
TP, TPD 32-80/4	0.1	0.1	0.1	0.5	1.0	2.7	-
TP, TPD 32-100/4	0.1	0.1	0.1	0.5	1.1	2.7	-
TP, TPD 32-120/4	0.1	0.1	0.1	0.6	1.1	2.7	-
TP, TPD 40-30/4	0.1	0.1	0.2	0.9	1.5	3.2	-
TP 40-60/4	0.1	0.1	0.1	0.8	1.4	3.1	-
TP, TPD 40-90/4	0.1	0.1	0.3	1.0	1.6	3.3	-
TP, TPD 40-100/4	0.1	0.1	0.2	0.9	1.5	3.1	-
TP, TPD 40-110/4	0.1	0.1	0.1	0.6	1.2	2.8	-
TP, TPD 40-140/4	0.1	0.1	0.1	0.7	1.3	2.9	-
TP, TPD 50-30/4	0.1	0.1	0.1	0.9	1.4	3.1	-
TP, TPD 50-60/4	0.1	0.1	0.2	0.9	1.5	3.2	-
TP, TPD 50-90/4	0.1	0.1	0.1	0.6	1.1	2.8	-
TP, TPD 50-80/4	0.1	0.1	0.1	0.8	1.3	3.0	-
TP, TPD 50-120/4	0.1	0.1	0.1	0.7	1.3	2.9	-
TP, TPD 50-140/4	0.1	0.1	0.1	0.7	1.3	2.9	-
TP, TPD 50-190/4	0.1	0.1	0.1	0.9	1.4	3.0	-
TP, TPD 50-230/4	0.1	0.1	0.2	1.0	1.5	3.1	-
TP, TPD 65-30/4	0.1	0.2	0.7	1.5	2.0	3.7	-
TP, TPD 65-60/4	0.2	0.4	0.9	1.6	2.2	3.9	-
TP, TPD 65-90/4	0.1	0.1	0.1	0.6	1.1	2.7	-
TP, TPD 65-110/4	0.1	0.1	0.1	0.6	1.1	2.7	-
TP, TPD 65-130/4	0.1	0.1	0.1	0.6	1.1	2.8	-
TP, TPD 65-150/4	0.1	0.1	0.1	0.6	1.2	2.8	-
TP, TPD 65-170/4	0.1	0.1	0.1	0.6	1.2	2.8	-
TP, TPD 65-240/4	0.1	0.1	0.1	0.8	1.3	2.9	-
TP, TPD 80-30/4	0.8	1.0	1.5	2.2	2.8	4.5	-
TP, TPD 80-60/4	0.8	1.0	1.5	2.3	2.8	4.5	-
TP, TPD 80-70/4	0.1	0.1	0.1	0.8	1.3	2.9	-
TP, TPD 80-90/4	0.1	0.1	0.1	0.7	1.2	2.8	-
TP, TPD 80-110/4	0.1	0.1	0.1	0.8	1.4	3.0	-
TP, TPD 80-150/4	0.1	0.1	0.1	0.8	1.3	2.9	-
TP, TPD 80-170/4	0.1	0.1	0.2	1.0	1.5	3.1	-
TP, TPD 80-240/4	0.1	0.1	0.3	1.0	1.5	3.2	-
TP, TPD 80-270/4	0.1	0.1	0.2	0.9	1.5	3.1	-
TP, TPD 80-340/4	0.1	0.1	0.3	1.1	1.6	3.2	-
TP, TPD 100-30/4	0.8	1.0	1.5	2.2	2.8	4.5	-
TP, TPD 100-65/4	0.1	0.1	0.1	0.8	1.3	3.0	-
TP, TPD 100-70/4	0.1	0.1	0.1	0.8	1.3	3.0	-
TP, TPD 100-90/4	0.1	0.1	0.1	0.9	1.4	3.0	-
TP, TPD 100-110/4	0.1	0.1	0.2	1.0	1.5	3.1	-
TP, TPD 100-130/4	0.1	0.1	0.6	1.3	1.9	3.5	-
TP, TPD 100-170/4	0.3	0.5	1.0	1.7	2.3	3.9	
TP 100-140/4	0.2	0.4	0.8	1.8	2.3	3.9	5.2
TP, TPD 100-200/4	0.1	0.1	0.5	1.2	1.8	3.4	4.7
TP, TPD 100-250/4	0.1	0.2	0.7	1.4	2.0	3.6	4.9
TP, TPD 100-330/4	0.3	0.5	1.0	1.7	2.3	3.9	5.2
TP, TPD 100-370/4	0.3	0.5	1.0	1.7	2.3	3.9	5.2
TP, TPD 100-410/4	0.5	0.7	1.2	1.9	2.5	4.1	5.4
TP 125-60/4	0.1	0.1	0.1	0.8	1.4	3.0	-
TP 125-80/4	0.1	0.1	0.1	0.9	1.4	3.1	-
TP 125-95/4	0.1	0.1	0.2	0.9	1.5	3.1	-
TP, TPD 125-110/4	0.1	0.1	0.1	0.9	1.4	3.0	-
TP, TPD 125-130/4	0.1	0.1	0.2	0.9	1.5	3.1	-
TP, TPD 125-160/4	0.1	0.1	0.2	1.0	1.5	3.1	-
TP 125-150/4	0.2	0.4	0.8	1.8	2.3	3.9	5.2
TP, TPD 125-190/4	0.1	0.1	0.2	0.9	1.5	3.1	4.4
TP, TPD 125-230/4	0.1	0.1	0.3	1.0	1.6	3.2	4.5
TP, TPD 125-300/4	0.1	0.1	0.2	0.9	1.5	3.1	4.4
TP, TPD 125-340/4	0.1	0.1	0.3	1.0	1.5	3.2	4.5
TP, TPD 125-400/4	0.1	0.1	0.3	1.0	1.6	3.2	4.5

Pump type	p [bar]						
	20 °C	60 °C	90 °C	110 °C	120 °C	140 °C	150 °C
TP 150-70/4	0.1	0.1	0.3	1.1	1.6	3.2	-
TP 150-110/4	0.1	0.1	0.4	1.1	1.7	3.3	-
TP 150-155/4	0.1	0.1	0.5	1.2	1.8	3.4	-
TP 150-170/4	0.1	0.1	0.6	1.3	1.9	3.5	-
TP, TPD 150-130/4	0.1	0.1	0.4	1.1	1.6	3.3	4.6
TP, TPD 150-160/4	0.1	0.1	0.4	1.1	1.7	3.3	4.6
TP, TPD 150-200/4	0.1	0.1	0.4	1.1	1.7	3.3	4.6
TP, TPD 150-220/4	0.1	0.1	0.5	1.2	1.8	3.4	4.7
TP, TPD 150-250/4	0.1	0.1	0.6	1.3	1.9	3.5	4.8
TP 150-260/4	0.1	0.1	0.5	1.2	1.8	3.4	4.7
TP 150-280/4	0.1	0.3	0.8	1.5	2.1	3.7	5.0
TP 150-340/4	0.1	0.2	0.7	1.5	2.0	3.6	4.9
TP 150-390/4	0.1	0.2	0.7	1.4	2.0	3.6	4.9
TP 150-450/4	0.1	0.1	0.5	1.2	1.8	3.4	4.7
TP 150-520/4	0.1	0.1	1.0	1.5	1.9	3.5	4.8
TP 150-660/4	0.1	0.2	0.7	1.4	1.9	3.6	4.9
TP 150-680/4	0.1	0.2	0.7	1.4	2.0	3.6	-
TP 200-50/4	0.3	0.4	0.9	1.7	2.2	3.8	-
TP 200-70/4	0.1	0.3	0.8	1.5	2.1	3.7	-
TP 200-90/4	0.1	0.2	0.7	1.4	2.0	3.6	-
TP 200-130/4	0.1	0.1	0.5	1.2	1.8	3.4	-
TP 200-150/4	0.1	0.1	0.4	1.2	1.7	3.3	-
TP 200-160/4	0.3	0.5	1.0	1.7	2.3	3.9	5.2
TP 200-190/4	0.2	0.4	0.9	1.6	2.2	3.8	5.1
TP 200-200/4	0.2	0.4	0.9	1.6	2.1	3.8	5.1
TP 200-240/4	0.1	0.2	0.7	1.4	2.0	3.6	4.9
TP 200-270/4	0.1	0.1	0.4	1.1	1.7	3.3	4.6
TP 200-290/4	0.1	0.1	0.6	1.3	1.9	3.5	4.8
TP 200-320/4	0.1	0.1	0.5	1.2	1.8	3.4	4.7
TP 200-330/4	0.1	0.1	0.3	1.1	1.6	3.2	4.5
TP 200-360/4	0.1	0.1	0.3	1.1	1.6	3.2	4.5
TP 200-400/4	0.1	0.1	0.3	1.0	1.6	3.2	4.5
TP 200-410/4	0.1	0.2	0.7	1.4	1.9	3.6	4.9
TP 200-470/4	0.1	0.1	0.4	1.1	1.6	3.3	4.6
TP 200-530/4	0.1	0.1	0.4	1.1	1.7	3.3	4.6
TP 200-590/4	0.1	0.2	0.7	1.4	2.0	3.6	4.9
TP 200-660/4	0.2	0.4	0.9	1.7	2.2	3.8	5.1
TP 300-190/4	0.5	0.7	1.1	2.1	2.6	4.2	5.5
TP 300-220/4	0.3	0.5	0.9	1.9	2.4	4.0	5.3
TP 300-250/4	0.1	0.3	0.7	1.7	2.2	3.8	5.1
TP 300-290/4	0.5	0.7	1.1	2.1	2.6	4.2	5.5
TP 300-390/4	0.5	0.7	1.1	2.1	2.6	4.2	5.5
TP 300-420/4	0.5	0.7	1.1	2.1	2.6	4.2	5.5
TP 300-430/4	0.5	0.7	1.1	2.1	2.6	4.2	5.5
TP 300-500/4	0.4	0.6	1.0	2.0	2.5	4.1	5.4
TP 300-550/4	0.3	0.5	0.9	1.9	2.4	4.0	5.3
TP 350-280/4	1.7	1.9	2.3	3.3	3.8	5.4	6.7
TP 350-320/4	1.6	1.8	2.2	3.2	3.7	5.3	6.6
TP 350-360/4	1.5	1.7	2.1	3.1	3.6	5.2	6.5
TP 350-420/4	1.4	1.6	2.0	3.0	3.5	5.1	6.4
TP 350-480/4	1.3	1.5	1.9	2.9	3.4	5.0	6.3
TP 350-530/4	0.5	0.7	1.1	2.1	2.6	4.2	5.5
TP 350-650/4	0.4	0.6	1.0	2.0	2.5	4.1	5.4
TP 350-780/4	0.3	0.5	0.9	1.9	2.4	4.0	5.3
TP 400-470/4	0.7	0.7	1.4	2.1	2.6	4.3	5.6
TP 400-510/4	1.6	1.7	2.3	3.1	3.6	5.2	6.5
TP 400-540/4	0.8	0.9	1.5	2.2	2.8	4.4	5.7
TP 400-670/4	0.8	0.8	1.5	2.2	2.8	4.4	5.7
TP 400-720/4	0.9	0.9	1.5	2.3	2.8	4.5	5.8
TP 400-760/4	1.4	1.5	2.1	2.8	3.4	5.0	6.3

TP, TPD, 6-pole, PN 16

Pump type	p [bar]					
	20 °C	60 °C	90 °C	110 °C	120 °C	140 °C
TP, TPD 125-60/6	0.1	0.1	0.1	0.7	1.2	2.8
TP, TPD 125-70/6	0.1	0.1	0.1	0.7	1.3	2.9
TP, TPD 125-80/6	0.1	0.1	0.1	0.7	1.2	2.9
TP, TPD 125-100/6	0.1	0.1	0.1	0.8	1.4	3.0
TP, TPD 125-130/6	0.1	0.1	0.1	0.7	1.3	2.9
TP, TPD 125-160/6	0.1	0.1	0.1	0.7	1.3	2.9
TP, TPD 150-60/6	0.1	0.1	0.1	0.7	1.3	2.9
TP, TPD 150-70/6	0.1	0.1	0.1	0.7	1.3	2.9
TP, TPD 150-90/6	0.1	0.1	0.1	0.8	1.3	2.9
TP, TPD 150-110/6	0.1	0.1	0.1	0.8	1.3	3.0

30. Key application data

Dear customer,

If you need an ATEX certificate or if you cannot select the pump on the basis of the guidelines in *Pumped liquids* on page 24, please fill in the following form in cooperation with a Grundfos representative. This will help to ensure that Grundfos supplies you with a pump solution adapted to meet exactly your needs in terms of pump type, pump materials, shaft seal type, elastomers and accessories.

Customer information

Company name: _____ Project title: _____
Customer number: _____ Reference number: _____
Phone number: _____ Customer contact: _____
Fax number: _____
Email address: _____

Quotation made by:

Company name: _____ Prepared by: _____
Phone number: _____ Date: _____ Page 1 of _____
Fax number: _____ Quotation number: _____
Email address: _____

Operating conditions

Pumped liquid

Type of liquid:
C f available:
Distilled/demineralised water? Yes: _____ No: _____
Conductivity of distilled or demineralised water: _____ [µS/cm]
Minimum liquid temperature: _____ [°C]
Maximum liquid temperature: _____ [°C]
Vapour pressure of liquid: _____ [bar]
Liquid concentration: _____ %
Liquid pH value:
Dynamic liquid viscosity: _____ [cP] = [mPa s]
Kinematic liquid viscosity: _____ [cSt] = [mm²/s]
Liquid density: _____ [kg/m³]
Specific heat capacity of liquid: _____ [kJ/(kg·K)]
Air or gas in liquid? Yes: _____ No: _____
Solids in liquid? Yes: _____ No: _____
Contents of solids in liquid, if available: _____ % of mass
Additives in liquid? Yes: _____ No: _____
Does the liquid crystallise? Yes: _____ No: _____
When does crystallisation happen?

Does the liquid get sticky when volatiles evaporate from the pumped liquid? Yes: _____ No: _____
Description of 'sticky' circumstances:

Is the liquid hazardous or poisonous? Yes: _____ No: _____
Special measures to be taken into account when dealing with this hazardous or poisonous liquid:

Special measures for handling this liquid:

CIP liquid, cleaning-in-place

Type of liquid:
C f available:
Liquid temperature during operation: _____ [°C]
Maximum liquid temperature: _____ [°C]
Vapour pressure of liquid: _____ [bar]
Liquid concentration: _____ %
Liquid pH value:

Pump sizing

Main duty point: Q: _____ [m³/h] H: _____ [m]
Maximum duty point: Q: _____ [m³/h] H: _____ [m]
Minimum duty point: Q: _____ [m³/h] H: _____ [m]

Ambient operating conditions

Ambient temperature: _____ [°C]
Altitude above sea level: [m]

Pressure

_____ [bar]
Maximum inlet pressure: _____ [bar]
Outlet pressure, inlet pressure and head: _____ [bar]

ATEX marking

Required marking of the pump

Customer's equipment group, e.g. II:
Customer's equipment category, e.g. 2, 3: _____
Gas, G, and/or dust, D: Gas (G): _ Dust (D): _ Gas and dust (G/D): _

Required marking of the motor

Protection type, e.g. d, de, e, nA:
Maximum experimental safe gap, e.g. B, C:
Temperature class
– gas, e.g. T3, T4, T5:
– dust, e.g. 125 °C: [°C]

Description/sketch

Detailed description of ATEX application
Attach a drawing, if possible:

ATEX certificate required Yes: _____ No: _

Frequency converter

Frequency Yes: _____ No: _____
Control parameter: Pressure: _____ Temperature: _____ Flow rate: _____ Other: _____
Detailed description of requirements
Attach a drawing, if possible:

_

System information

Please provide us with information about your system and a simple sketch, if possible. This gives us an idea as to whether you need accessories or monitoring equipment, or whether you already have a suitable system which makes it unnecessary to attach any further equipment.

31. Grundfos Product Center

Online search and sizing tool to help you make the right choice.

http://product-selection.grundfos.com

"SIZING" enables you to size a pump based on entered data and selection choices.

"REPLACEMENT" enables you to find a replacement product.
Search results will include information on the following:

- the lowest purchase price
- the lowest energy consumption
- the lowest total life cycle cost.

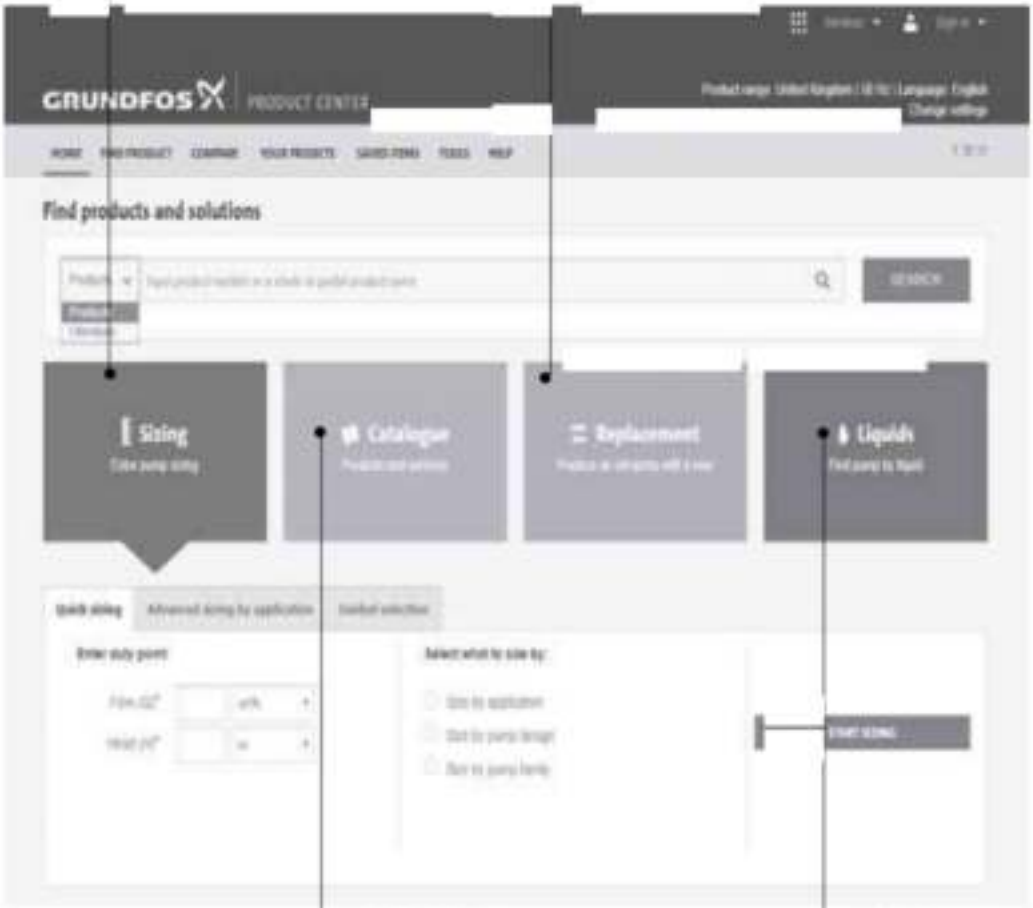

"CATALOGUE" gives you access to the Grundfos product catalogue.

"LIQUIDS" enables you to find pumps designed for aggressive, flammable or other special liquids.

All the information you need in one place

Performance curves, technical specifications, [redacted] rawings, motor curves, wiring diagrams, spare parts, service kits, 3D drawings, documents, system parts. The Product Center displays any recent and saved items - including complete projects - right on the main page.

Downloads

On the product pages, you can download installation and operating instructions, data booklets, service instructions, etc. in PDF format.

be think innovate

V7124417 0220

ECM: 1279813

GRUNDFOS A/S
DK-8850 Bjerringbro , Denmark
Telephone: +45 87 50 14 00
www.grundfos.com

GRUNDFOS